MOTOR MTH 08 / MTZ 08
POWER 600-630 W

MTH 08

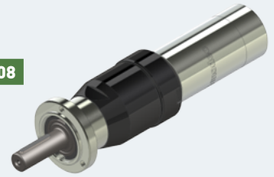

MTZ 08

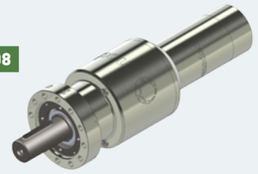

REDUCTION RATIO
(3 digits)
See table below

OPTIONS
(2 digits)
See table on below

M T H/Z 0 8 X X X X X X X X X X – X X

ROTATION*
- RT Right (Clockwise)
- LT Left (CCW)
- RV Reversible

FLANGE
(1 to 2 digits)
MTH : Group IV pages 160 to 162
MTZ : Group VI page 167

OUTPUT SHAFT
(1 to 3 digits)
MTH : Group IV pages 163 to 165
MTZ : Group VI page 168

** rotation direction is defined when looking from the back of the motor*

PERFORMANCES

MTH/Z 08 XT			Speed (rpm)		Torque (N.m)					Dimensions		
Air motor reference	Reduction ratio	Air supply pressure	@ max Power	Free	@ max Power	Max (stall)	Starting torque	Max Power (W)	Air cons (Nl/min)	A (mm)	Ø (mm)	Weight (kg)
MTH 08 XT 159	159	6,2 bars	60	119	96	165	145	596	1000	238,2	69	3,4
		5 bars	55	110	80	134	118	462	850			
		4 bars	50	99	64	105	92	333	650			
MTH 08 XT 190	190	6,2 bars	50	99	115	198	174	596	1000	238,2	69	3,4
		5 bars	46	92	96	160	141	462	850			
		4 bars	41	83	77	126	110	333	650			
MTH 08 XT 224	224	6,2 bars	42	84	135	233	205	596	1000	238,2	69	3,4
		5 bars	39	78	113	189	166	462	850			
		4 bars	35	70	91	148	130	333	650			
MTH 08 XT 258	258	6,2 bars	37	73	155	268	236	596	1000	238,2	69	3,4
		5 bars	34	68	130	217	191	462	850			
		4 bars	31	61	104	170	150	333	650			
MTH 08 XT 309	309	6,2 bars	31	61	186	321	283	596	1000	238,2	69	3,4
		5 bars	28	56	156	260	229	462	850			
		4 bars	25	51	125	204	179	333	650			
MTZ 08 XT 394	394	6,2 bars	24	48	237	410	360	596	1000	129,1	88,8	4,2
		5 bars	22	44	199	332	292	462	850			
		4 bars	20	40	159	260	229	333	650			
MTZ 08 XT 564	564	6,2 bars	17	34	340	587	516	596	1000	129,1	88,8	4,2
		5 bars	15	31	285	475	418	462	850			
		4 bars	14	28	228	372	328	333	650			

MTH/Z 08 RV			Speed (rpm)		Torque (N.m)					Dimensions		
Air motor reference	Reduction ratio	Air supply pressure	@ max Power	Free	@ max Power	Max (stall)	Starting torque	Max Power (W)	Air cons (Nl/min)	A (mm)	Ø (mm)	Weight (kg)
MTH 08 RV 190	190	6,2 bars	48	96	126	182	160	633	950	238,2	69	3,4
		5 bars	44	88	103	149	131	471	750			
		4 bars	40	79	85	116	102	351	600			
MTH 08 RV 224	224	6,2 bars	41	81	149	214	189	633	950	238,2	69	3,4
		5 bars	37	74	121	176	154	471	750			
		4 bars	34	67	100	137	120	351	600			
MTH 08 RV 258	258	6,2 bars	35	70	171	247	217	633	950	238,2	69	3,4
		5 bars	32	65	139	202	178	471	750			
		4 bars	29	58	115	157	139	351	600			
MTH 08 RV 309	309	6,2 bars	29	59	205	296	260	633	950	238,2	69	3,4
		5 bars	27	54	167	242	213	471	750			
		4 bars	24	49	138	189	166	351	600			
MTZ 08 RV 394	394	6,2 bars	23	46	262	377	332	633	950	129,1	88,8	4,2
		5 bars	21	42	213	309	272	471	750			
		4 bars	19	38	176	241	212	351	600			
MTZ 08 RV 564	564	6,2 bars	16	32	375	540	475	633	950	129,1	88,8	4,2
		5 bars	15	30	305	442	389	471	750			
		4 bars	13	27	252	345	303	351	600			

For connection and lubrication, see page 51

Data indicated in this table have an accuracy of +/- 5%

OPTIONS AVAILABLE FOR THE MTH 08

List of available accessories for this motor page 51

Collected exhaust	●		●	●	●				●	●		
ATEX certification			●			●			●	●	●	●
Left/Right switch*		●				●	●	●			●	●
Lubrication free				●			●		●		●	
Kit start					●			●		●		●
Code	03	03	07	09	10	12	16	17	21	22	29	30

** sur modèle réversible uniquement*

OPTIONS DISPONIBLES POUR LE MOTEUR MTZ 08

Voir les accessoires disponibles pour ce moteur en page 51

Collected exhaust	●		●	●	●	●				●	●	●	●	●			●	●
ATEX certification			●				●			●	●	●			●	●	●	●
Left/Right switch*		●					●	●	●						●	●		
Lubrication free				●				●		●			●		●		●	
Kit start					●				●		●			●		●		●
Stainless steel						●						●	●	●			●	●
Code	01	03	07	09	10	11	12	16	17	21	22	23	27	28	29	30	36	37

** Reversible motors only*

LAYOUT

MTH 08

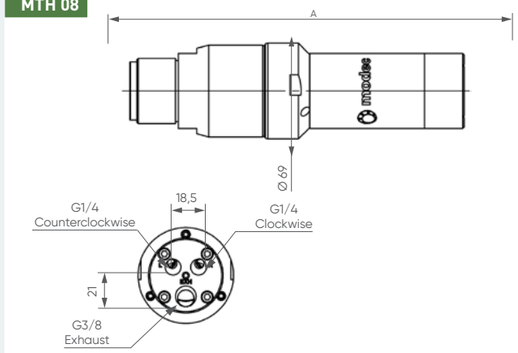

MTZ 08

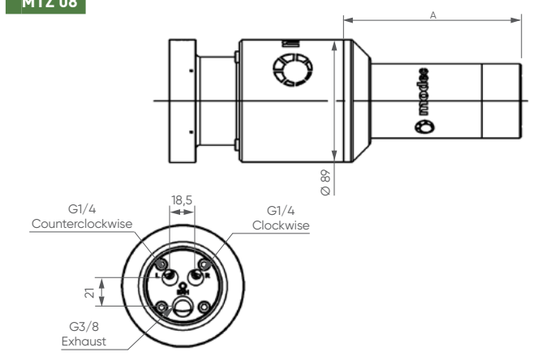

POWER, SPEED, TORQUE AND AIR CONSUMPTION GRAPHS

MTH/Z 08 XT

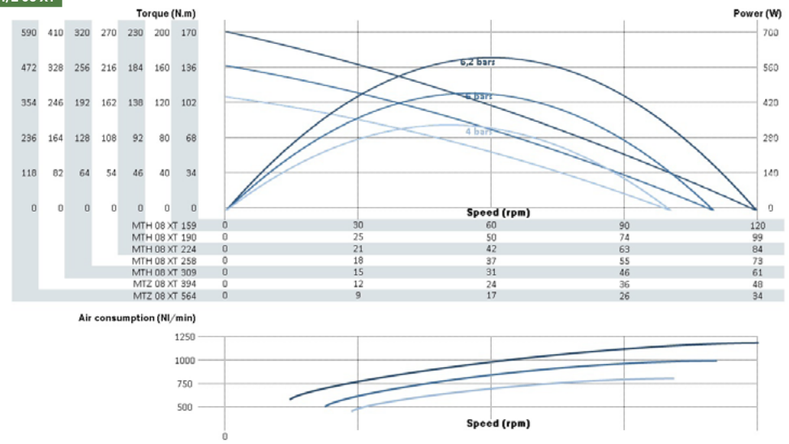

	6,2 bars				5 bars				4 bars			
Torque (N.m)	590	410	320	270	230	200	170	472	328	256	216	184
Power (W)	700				500			420				280
Speed (rpm)	0	30	60	90	120	0	25	50	74	99	0	21
MTH 08 XT 159	0	30	60	90	120	0	25	50	74	99	0	21
MTH 08 XT 190	0	25	50	74	99	0	21	42	63	84	0	18
MTH 08 XT 224	0	21	42	63	84	0	18	37	55	73	0	15
MTH 08 XT 258	0	18	37	55	73	0	15	31	46	61	0	12
MTH 08 XT 309	0	15	31	46	61	0	12	24	36	48	0	9
MTZ 08 XT 394	0	12	24	36	48	0	9	17	26	34	0	7
MTZ 08 XT 564	0	9	17	26	34	0	7	14	21	28	0	6

	162	138	120	102	236	164	128	108	92	80	68	118	82	64	54	46	40	34	0	0	0	0	0	0	0
Power (W)				140								0													
Speed (rpm)	0	30	60	90	120	0	25	50	74	99	0	21	42	63	84	0	18	37	55	73	0	15	31	46	61
MTH 08 XT 159	0	30	60	90	120	0	25	50	74	99	0	21	42	63	84	0	18	37	55	73	0	15	31	46	61
MTH 08 XT 190	0	25	50	74	99	0	21	42	63	84	0	18	37	55	73	0	15	31	46	61	0	12	24	36	48
MTH 08 XT 224	0	21	42	63	84	0	18	37	55	73	0	15	31	46	61	0	12	24	36	48	0	9	17	26	34
MTH 08 XT 258	0	18	37	55	73	0	15	31	46	61	0	12	24	36	48	0	9	17	26	34	0	7	14	21	28
MTH 08 XT 309	0	15	31	46	61	0	12	24	36	48	0	9	17	26	34	0	7	14	21	28	0	6	12	18	24
MTZ 08 XT 394	0	12	24	36	48	0	9	17	26	34	0	7	14	21	28	0	6	12	18	24	0	5	10	15	20
MTZ 08 XT 564	0	9	17	26	34	0	7	14	21	28	0	6	12	18	24	0	5	10	15	20	0	4	8	12	16

MTH/Z 08 RV

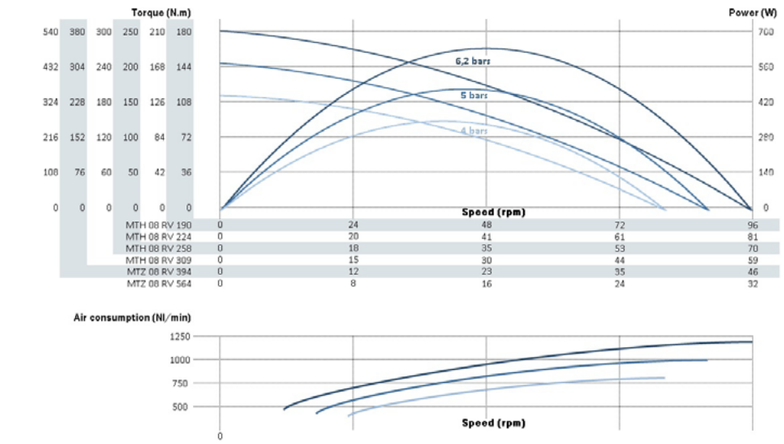

	6,2 bars				5 bars				4 bars			
Torque (N.m)	540	380	300	250	210	180	432	304	240	200	168	144
Power (W)	700				500			420				280
Speed (rpm)	0	24	48	72	96	0	20	41	61	81	0	18
MTH 08 RV 190	0	24	48	72	96	0	20	41	61	81	0	18
MTH 08 RV 224	0	20	41	61	81	0	18	35	53	70	0	15
MTH 08 RV 258	0	18	35	53	70	0	15	30	44	59	0	12
MTH 08 RV 309	0	15	30	44	59	0	12	23	35	46	0	9
MTZ 08 RV 394	0	12	23	35	46	0	9	17	26	34	0	7
MTZ 08 RV 564	0	8	16	24	32	0	6	12	18	24	0	5

	162	144	126	108	216	152	120	100	84	72	108	76	60	50	42	36	0	0	0	0	0	0	0	0	0
Power (W)				140								0													
Speed (rpm)	0	24	48	72	96	0	20	41	61	81	0	18	35	53	70	0	15	30	44	59	0	12	23	35	46
MTH 08 RV 190	0	24	48	72	96	0	20	41	61	81	0	18	35	53	70	0	15	30	44	59	0	12	23	35	46
MTH 08 RV 224	0	20	41	61	81	0	18	35	53	70	0	15	30	44	59	0	12	23	35	46	0	8	16	24	32
MTH 08 RV 258	0	18	35	53	70	0	15	30	44	59	0	12	23	35	46	0	9	17	26	34	0	6	12	18	24
MTH 08 RV 309	0	15	30	44	59	0	12	23	35	46	0	9	17	26	34	0	7	14	21	28	0	5	10	15	20
MTZ 08 RV 394	0	12	23	35	46	0	9	17	26	34	0	7	14	21	28	0	5	10	15	20	0	4	8	12	16
MTZ 08 RV 564	0	9	17	26	34	0	7	14	21	28	0	5	10	15	20	0	4	8	12	16	0	3	6	9	12

MAXIMUM RADIAL & AXIAL LOAD

MTH 08

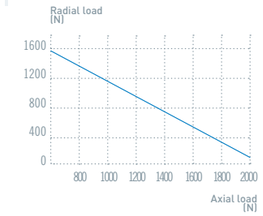

for 100 millions revolutions
(load applied @ half shaft length)

MTZ 08

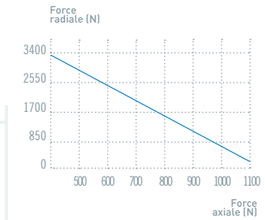

for 100 millions revolutions
(load applied @ half shaft length)

NOTES

modec moteurs & solutions pneumatiques