MOTORS POWER MTE 25 / NTE 25

2400-2700 W

MTE 25

NTE 25 XT

NTE 25 RV

REDUCTION RATIO
(3 digits)
See table on right page

OPTIONS
(2 digits)
See table on right page

X T E 2 5 X X X X X X X X X X X – X X

ROTATION*
- RT Right (Clockwise)
- LT Left (CCW)
- RV Reversible

FLANGE
(1 to 2 digits)
Group III page 159

OUTPUT SHAFT
(1 to 3 digits)
Group III page 159

** rotation direction is defined when looking from the back of the motor*

MAXIMUM RADIAL & AXIAL LOAD

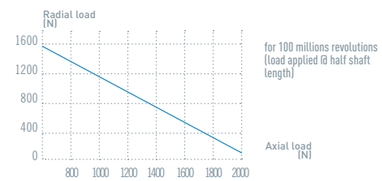

LAYOUT

MTE 25

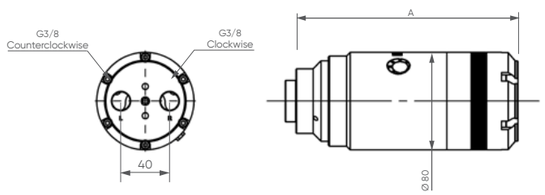

NTE 25 XT

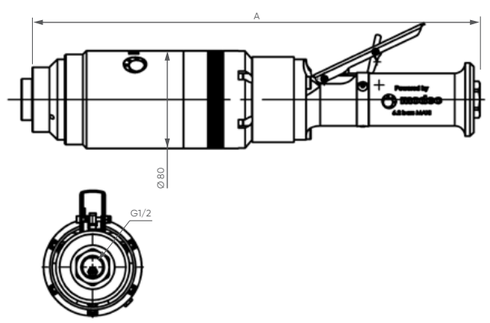

NTE 25 RV

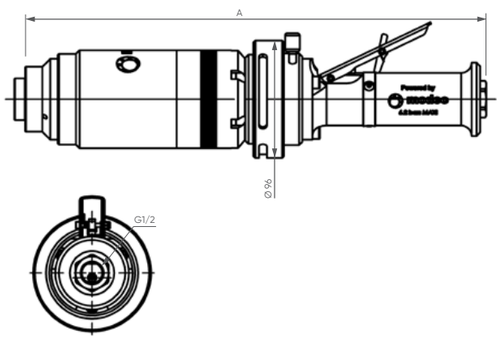

PERFORMANCES

MTE / NTE 25 Air motor reference	Reduction ratio	Air supply pressure	Speed (rpm) @ max Power	Speed (rpm) Free	Torque (N.m) @ max Power	Torque (N.m) Max (stall)	Torque (N.m) Starting torque	Max Power (W)	Air cons (Nl/min)	Dimensions A (mm)	Dimensions Ø (mm)	Dimensions Weight (kg)
MTE 25 XT 001	001	6,2 bars	5700	11400	4,5	7,5	6,6	2700	2800	182,6	80	3,0
		5 bars	5300	10600	3,8	6,2	5,5	2100	2300			
		4 bars	4900	9800	3,2	4,9	4,3	1650	1800			
MTE 25 RV 001	001	6,2 bars	5100	10200	4,4	6,8	6,0	2400	2700	182,6	80	3,0
		5 bars	4800	9600	3,8	5,6	5,0	1900	2200			
		4 bars	4400	8800	3,2	4,6	4,0	1500	1700			
NTE 25 XT 001	001	6,2 bars	5700	11400	4,5	7,5	6,6	2700	2800	367,1	80	4,0
		5 bars	5300	10600	3,8	6,2	5,5	2100	2300			
		4 bars	4900	9800	3,2	4,9	4,3	1650	1800			
NTE 25 RV 001	001	6,2 bars	5100	10200	4,4	6,8	6,0	2400	2700	378,1	80	4,4
		5 bars	4800	9600	3,8	5,6	5,0	1900	2200			
		4 bars	4400	8800	3,2	4,6	4,0	1500	1700			

For connection and lubrication, see page 125

Data indicated in this table have an accuracy of +/- 5%

OPTIONS AVAILABLE FOR THE MTE 25

Code	00	01	02	03	04	05	07	09	10	11	12	13	14	16	17	21	22	23	27	28	29	30	36	37
Collected exhaust		●					●	●	●	●						●	●	●	●	●			●	●
ATEX certification			●				●				●	●	●			●	●	●			●	●	●	●
Left/Right switch*				●							●			●	●						●	●		
Lubrication free					●			●				●		●		●			●		●		●	
Kit start						●			●				●		●		●			●		●		●
Inox										●								●	●	●			●	●

** Reversible motors only* *** Non reversible motors only*

OPTIONS AVAILABLE FOR THE NTE 25 XT

Code	00	01	02	04	05	07	09	10	13	14	21	22
Collected exhaust		●				●	●	●			●	●
ATEX certification			●			●			●	●	●	●
Lubrication free				●			●		●		●	
Kit start					●			●		●		●

List of available accessories for this motor page 125

OPTIONS AVAILABLE FOR THE NTE 25 RV

Code	03	12	16	17	29	30
ATEX certification		●			●	●
Left/Right switch	●	●	●	●	●	●
Lubrication free			●		●	
Kit start				●		●

POWER, SPEED, TORQUE AND AIR CONSUMPTION GRAPHS

MTE 25 XT

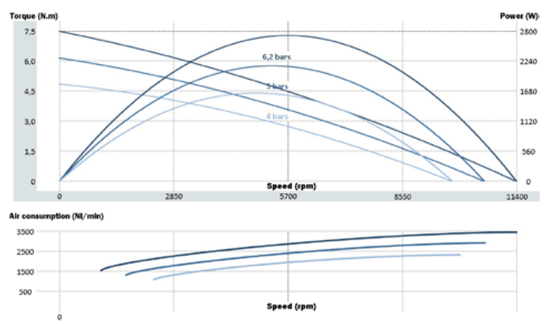

MTE 25 RV

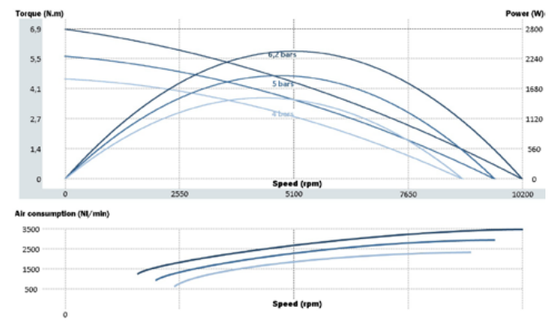

NTE 25 XT

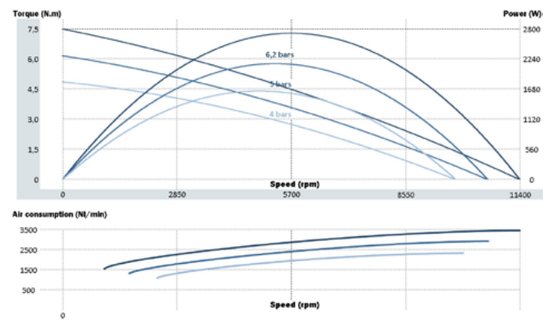

NTE 25 RV

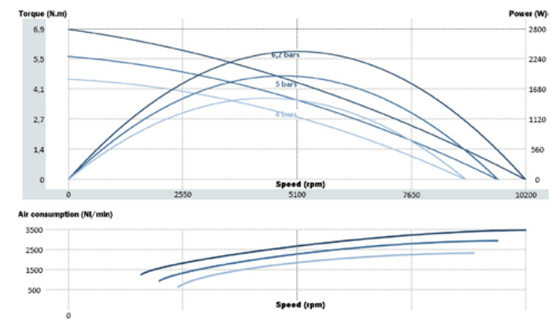

modec moteurs & solutions pneumatiques