MOTORS MRZ 20
POWER 1700-1900 W

MRZ 20 XT

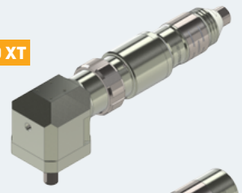

MRZ 20 RV

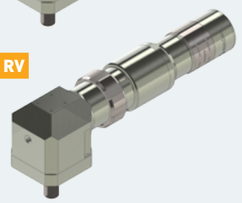

REDUCTION RATIO
(3 digits)
See table below

OPTIONS
(2 digits)
See table on right page

M R Z 2 0 X X X X X X X X X X – X X

ROTATION*
- RT Right (Clockwise)
- LT Left (CCW)
- RV Reversible

FLANGE
(1 to 2 digits)
Group IX page 174

OUTPUT SHAFT
(1 to 3 digits)
Group IX page 174

** rotation direction is defined when looking from the back of the motor*

PERFORMANCES

MRZ 20 XT Air motor reference	Reduction ratio	Air supply pressure	Speed (rpm) @ max Power	Speed (rpm) Free	Torque (N.m) @ max Power	Torque (N.m) Max (stall)	Torque (N.m) Starting torque	Max Power (W)	Air cons (Nl/min)	Dimensions A (mm)	Dimensions Ø (mm)	Dimensions Weight (kg)
MRZ 20 XT 115	115	6,2 bars	51	102	324	625	550	1730	1900	414,3	88,8	11,2
		5 bars	48	95	268	518	456	1336	1600			
		4 bars	45	90	239	419	368	1124	1200			
MRZ 20 XT 154	154	6,2 bars	38	76	435	838	737	1730	1900	414,3	88,8	10,7
		5 bars	35	71	360	695	611	1336	1600			
		4 bars	33	67	321	561	494	1124	1200			

MRZ 20 RV Air motor reference	Reduction ratio	Air supply pressure	Speed (rpm) @ max Power	Speed (rpm) Free	Torque (N.m) @ max Power	Torque (N.m) Max (stall)	Torque (N.m) Starting torque	Max Power (W)	Air cons (Nl/min)	Dimensions A (mm)	Dimensions Ø (mm)	Dimensions Weight (kg)
MRZ 20 RV 115	115	6,2 bars	47	94	381	526	463	1880	2100	400,3	88,8	11,5
		5 bars	45	89	309	424	373	1443	1700			
		4 bars	42	83	248	346	304	1086	1400			
MRZ 20 RV 154	154	6,2 bars	35	70	510	706	621	1880	2100	400,3	88,8	11
		5 bars	33	67	414	568	500	1443	1700			
		4 bars	31	62	333	464	408	1086	1400			
MRZ 20 RV 171	171	6,2 bars	32	63	567	784	690	1880	2100	400,3	88,8	11,5
		5 bars	30	60	460	631	556	1443	1700			
		4 bars	28	56	370	515	453	1086	1400			

For connection and lubrication, see page 101

Data indicated in this table have an accuracy of +/- 5%

OPTIONS AVAILABLE FOR THIS MOTOR

Code	00	01	02	03	04	05	06	07	09	10	12	13	14	15	16	17	18	19	21	22	29	30	31	32
Collected exhaust		●						●	●	●									●	●				
ATEX certification			●					●			●	●	●	●					●	●	●	●	●	●
Left/Right switch*				●							●				●	●					●	●		
Lubrication free					●				●			●			●		●		●		●		●	
Kit start						●				●			●			●		●		●		●		●
Speed control**							●							●			●	●					●	●

List of available accessories for this motor page 101

** Reversible motors only* *** Non reversible motors only*

LAYOUT

MRZ 20 XT

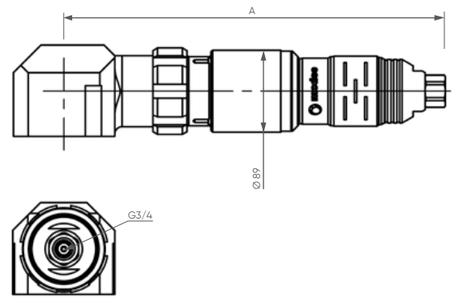

MRZ 20 RV

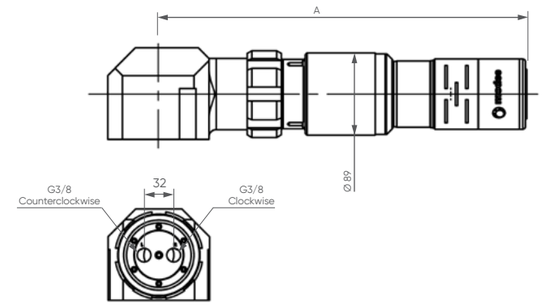

POWER, SPEED, TORQUE AND AIR CONSUMPTION GRAPHS

MRZ 20 XT

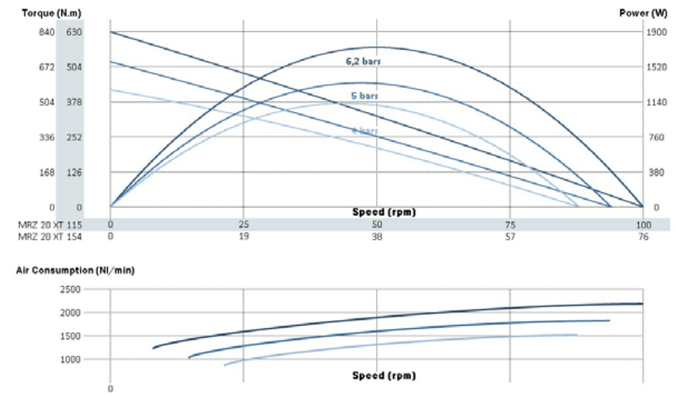

MRZ 20 RV

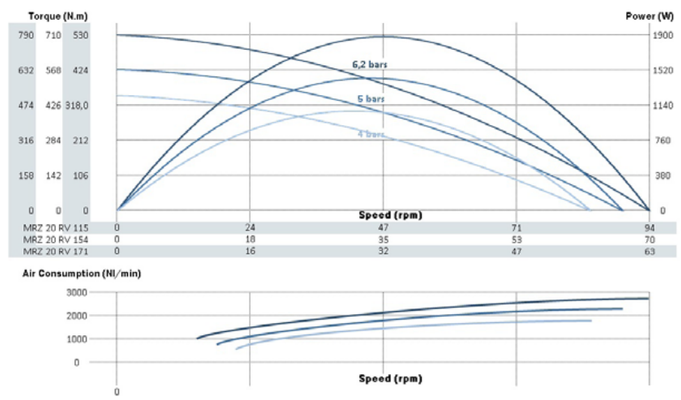

MAXIMUM RADIAL & AXIAL LOAD

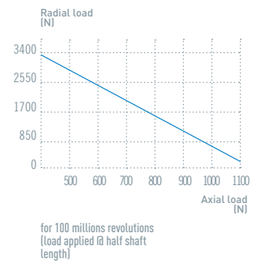

NOTES

modec moteurs & solutions pneumatiques