MOTORS MRH 25 / MRZ 25
POWER
2300-2700 W

MRH 25

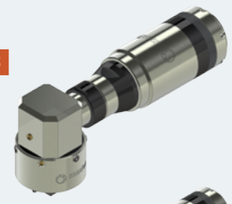

MRZ 25

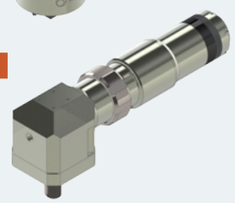

REDUCTION RATIO
(3 digits)
See table below

OPTIONS
(2 digits)
See table on right page

M R H/Z 2 5 X X X X X X X X X X — X X

ROTATION*
- RT Right (Clockwise)
- LT Left (CCW)
- RV Reversible

FLANGE
(1 to 2 digits)
Group VIII page 172

OUTPUT SHAFT
(1 to 3 digits)
Group VIII page 173

** rotation direction is defined when looking from the back of the motor*

OPTIONS AVAILABLE FOR THIS MOTOR

Code	00	01	02	03	04	05	07	09	10	12	13	14	16	17	21	22	29	30
Collected exhaust		▶					▶	▶	▶						▶	▶		
ATEX certification			▶				▶			▶	▶	▶			▶	▶	▶	▶
Left/Right switch*				▶						▶			▶	▶			▶	▶
Lubrication free					▶						▶		▶		▶		▶	
Kit start						▶						▶		▶		▶		▶

List of available accessories for this motor page 125

** Reversible motors only*

LAYOUT

MRH 25

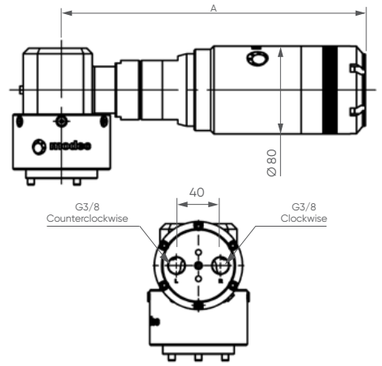

MRZ 25

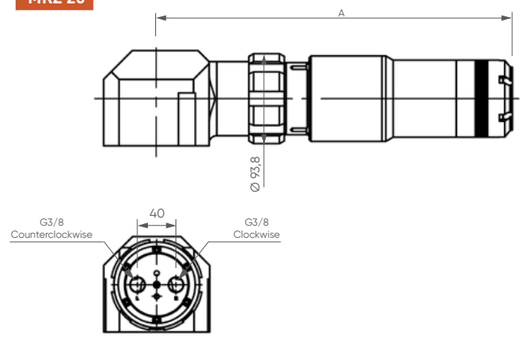

POWER, SPEED, TORQUE AND AIR CONSUMPTION GRAPHS

MRH/Z 25 XT

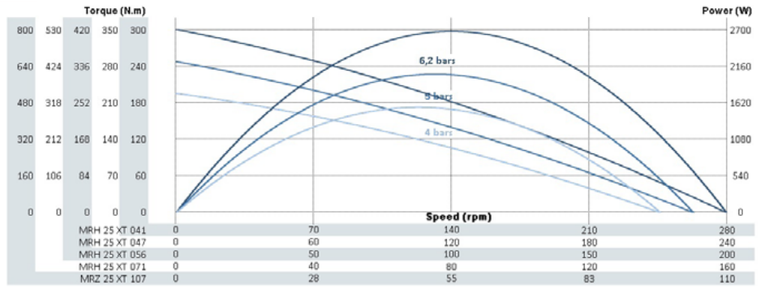

MRH 25 XT 041	0	70	140	210	280
MRH 25 XT 047	0	60	120	180	240
MRH 25 XT 056	0	50	100	150	200
MRH 25 XT 071	0	40	80	120	160
MRZ 25 XT 107	0	28	55	83	110

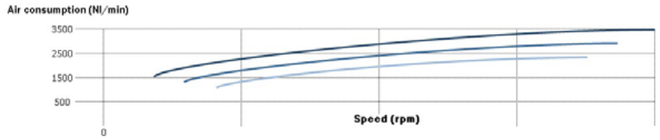

MRH/Z 25 RV

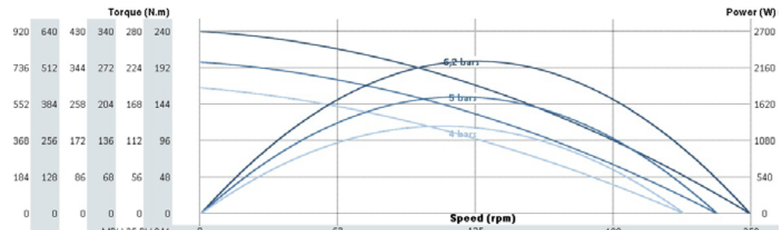

MRH 25 RV 041	0	63	125	188	250
MRH 25 RV 047	0	55	110	165	220
MRH 25 RV 056	0	45	90	135	180
MRH 25 RV 071	0	35	70	105	140
MRZ 25 RV 107	0	24	48	71	95
MRZ 25 RV 154	0	17	33	50	66

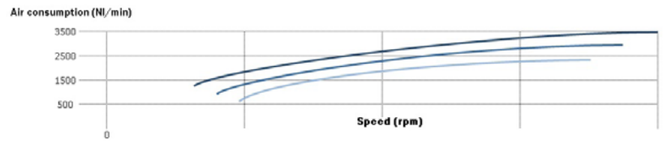

MAXIMUM RADIAL & AXIAL LOAD

MRH 25

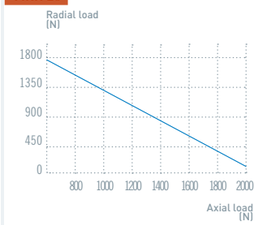

for 100 millions revolutions (load applied @ half shaft length)

MRZ 25

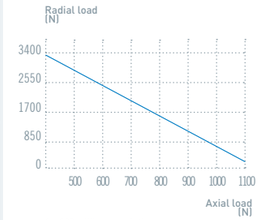

for 100 millions revolutions (load applied @ half shaft length)

PERFORMANCES

MRH/Z 25 XT — Air motor reference	Reduction ratio	Air supply pressure	Speed (rpm) @ max Power	Speed (rpm) Free	Torque (N.m) @ max Power	Torque (N.m) Max (stall)	Torque (N.m) Starting torque	Max Power (W)	Air cons (Nl/min)	Dimensions A (mm)	Dimensions Ø (mm)	Dimensions Weight (kg)
MRH 25 XT 041	41	6,2 bars	140	279	183	302	265	2672	2800	277	80	6,7
		5 bars	131	262	148	248	219	2036	2300			
		4 bars	122	244	121	196	173	1543	1800			
MRH 25 XT 047	47	6,2 bars	121	243	210	347	305	2672	2800	277	80	6,7
		5 bars	114	228	171	286	252	2036	2300			
		4 bars	106	212	139	226	199	1543	1800			
MRH 25 XT 056	56	6,2 bars	101	203	252	416	366	2672	2800	277	80	6,7
		5 bars	95	190	205	343	301	2036	2300			
		4 bars	89	177	166	271	238	1543	1800			
MRH 25 XT 071	71	6,2 bars	80	159	321	530	466	2672	2800	277	80	6,7
		5 bars	75	149	261	437	384	2036	2300			
		4 bars	70	139	212	345	304	1543	1800			
MRZ 25 XT 107	107	6,2 bars	53	106	483	797	701	2672	2800	371,7	88,8	12,2
		5 bars	50	99	392	657	578	2036	2300			
		4 bars	46	92	319	519	457	1543	1800			

MRH/Z 25 RV — Air motor reference	Reduction ratio	Air supply pressure	Speed (rpm) @ max Power	Speed (rpm) Free	Torque (N.m) @ max Power	Torque (N.m) Max (stall)	Torque (N.m) Starting torque	Max Power (W)	Air cons (Nl/min)	Dimensions A (mm)	Dimensions Ø (mm)	Dimensions Weight (kg)
MRH 25 RV 041	41	6,2 bars	126	251	172	244	214	2256	2700	277	80	6,7
		5 bars	117	235	140	203	178	1717	2200			
		4 bars	111	221	112	168	148	1299	1700			
MRH 25 RV 047	47	6,2 bars	109	218	197	281	247	2256	2700	277	80	6,7
		5 bars	102	204	161	233	205	1717	2200			
		4 bars	96	192	129	194	170	1299	1700			
MRH 25 RV 056	56	6,2 bars	91	182	237	336	296	2256	2700	277	80	6,7
		5 bars	85	170	193	280	246	1717	2200			
		4 bars	80	160	155	232	204	1299	1700			
MRH 25 RV 071	71	6,2 bars	71	143	302	428	377	2256	2700	277	80	6,7
		5 bars	67	134	246	356	314	1717	2200			
		4 bars	63	126	197	296	260	1299	1700			
MRZ 25 RV 107	107	6,2 bars	48	95	453	644	567	2256	2700	371,7	88,8	12,2
		5 bars	44	89	369	536	472	1717	2200			
		4 bars	42	84	297	445	391	1299	1700			
MRZ 25 RV 154	154	6,2 bars	33	66	650	923	812	2256	2700	371,7	88,8	12,2
		5 bars	31	62	529	768	676	1717	2200			
		4 bars	29	58	425	637	561	1299	1700			

For connection and lubrication, see page 125

Data indicated in this table have an accuracy of +/- 5%

NOTES

modec moteurs & solutions pneumatiques