MOTOR MRH 10
POWER 1000-1150 W

MRH 10 XT

MRH 10 RV

M R H 1 0 X X X X X X X X X X X – X X

REDUCTION RATIO
(3 digits)
See table below

OPTIONS
(2 digits)
See table on right page

ROTATION*
- RT Right (Clockwise)
- LT Left (CCW)
- RV Reversible

FLANGE
(1 to 2 digits)
Group VIII page 172

OUTPUT SHAFT
(1 to 3 digits)
Group VIII page 173

** rotation direction is defined when looking from the back of the motor*

PERFORMANCES

MRH 10 XT – Air motor reference	Reduction ratio	Air supply pressure	Speed (rpm) @ max Power	Speed (rpm) Free	Torque (N.m) @ max Power	Torque (N.m) Max (stall)	Torque (N.m) Starting torque	Max Power (W)	Air cons (Nl/min)	Dimensions A (mm)	Dimensions Ø (mm)	Dimensions Weight (kg)
MRH 10 XT 102	102	6,2 bars	72	145	129	191	157	978	1600	258	69	5,1
		5 bars	68	136	107	158	130	765	1200			
		4 bars	64	129	81	127	104	544	1000			
MRH 10 XT 170	170	6,2 bars	44	87	214	317	260	978	1600	282	69	5,4
		5 bars	41	82	178	262	215	765	1200			
		4 bars	39	78	133	210	172	544	1000			
MRH 10 XT 195	195	6,2 bars	38	76	246	365	299	978	1600	282	69	5,4
		5 bars	36	71	205	301	247	765	1200			
		4 bars	34	68	154	241	198	544	1000			
MRH 10 XT 234	234	6,2 bars	32	63	295	437	358	978	1600	282	69	5,4
		5 bars	30	60	245	361	296	765	1200			
		4 bars	28	56	184	289	237	544	1000			
MRH 10 XT 269	269	6,2 bars	28	55	339	503	412	978	1600	282	69	5,4
		5 bars	26	52	282	415	341	765	1200			
		4 bars	25	49	212	333	273	544	1000			
MRH 10 XT 322	322	6,2 bars	23	46	406	603	494	978	1600	282	69	5,4
		5 bars	22	43	338	498	408	765	1200			
		4 bars	20	41	254	399	327	544	1000			

MRH 10 RV – Air motor reference	Reduction ratio	Air supply pressure	Speed (rpm) @ max Power	Speed (rpm) Free	Torque (N.m) @ max Power	Torque (N.m) Max (stall)	Torque (N.m) Starting torque	Max Power (W)	Air cons (Nl/min)	Dimensions A (mm)	Dimensions Ø (mm)	Dimensions Weight (kg)
MRH 10 RV 102	102	6,2 bars	79	158	142	179	157	1143	1600	248,5	69	5,2
		5 bars	74	149	112	144	126	870	1300			
		4 bars	69	138	86	110	97	635	1000			
MRH 10 RV 170	170	6,2 bars	48	95	235	296	261	1172	1600	272,5	69	5,5
		5 bars	45	90	185	238	209	870	1300			
		4 bars	42	84	142	183	161	624	1000			
MRH 10 RV 195	195	6,2 bars	41	83	271	341	300	1172	1600	272,5	69	5,5
		5 bars	39	78	213	274	241	870	1300			
		4 bars	36	73	164	210	185	624	1000			
MRH 10 RV 234	234	6,2 bars	35	69	324	408	359	1172	1600	272,5	69	5,5
		5 bars	33	65	255	328	288	870	1300			
		4 bars	30	61	196	252	222	624	1000			
MRH 10 RV 269	269	6,2 bars	30	60	373	470	414	1172	1600	272,5	69	5,5
		5 bars	28	57	294	377	332	870	1300			
		4 bars	26	53	226	290	255	624	1000			
MRH 10 RV 322	322	6,2 bars	25	50	447	563	496	1172	1600	272,5	69	5,5
		5 bars	24	47	352	452	398	870	1300			
		4 bars	22	44	271	347	306	624	1000			

For connection and lubrication, see page 73

Data indicated in this table have an accuracy of +/- 5%

OPTIONS AVAILABLE FOR THIS MOTOR

Code	00	01	02	03	04	05	06	07	09	10	12	13	14	15	16	17	18	19	21	22	29	30	31	32
Collected exhaust		●						●	●	●									●	●				
ATEX certification			●					●			●	●	●	●					●	●	●	●	●	●
Left/Right switch*				●							●				●	●					●	●		
Lubrication free					●				●			●			●		●		●		●		●	
Kit start						●				●			●			●		●		●		●		●
Speed control**							●							●			●	●					●	●

List of available accessories for this motor page 73

** Reversible motors only* *** Non reversible motors only*

LAYOUT

MRH 10 XT

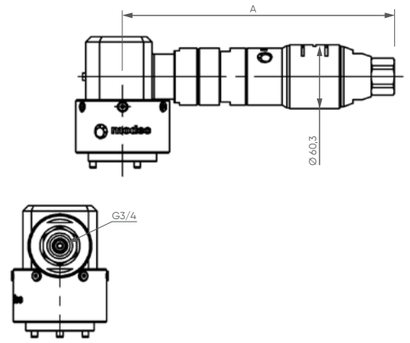

MRH 10 RV

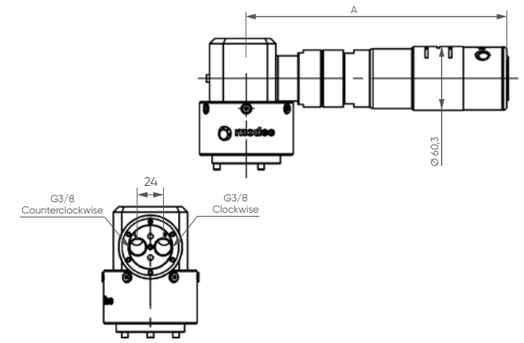

POWER, SPEED, TORQUE AND AIR CONSUMPTION GRAPHS

MRH 10 XT

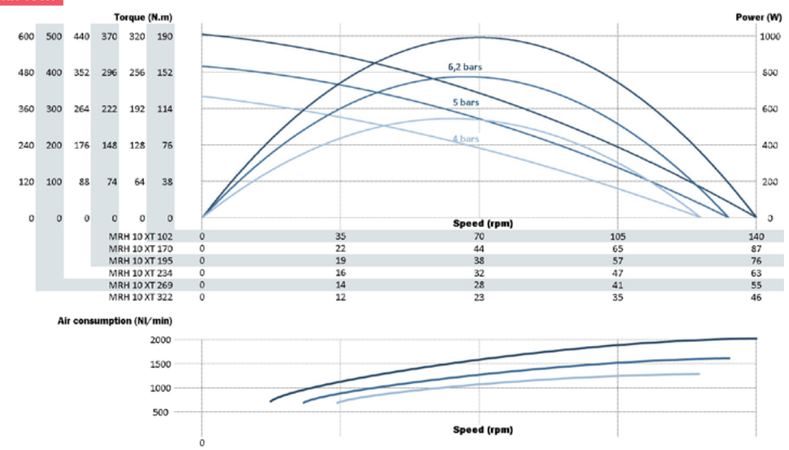

	0	35	70	105	140
MRH 10 XT 102	0	35	70	105	140
MRH 10 XT 170	0	22	44	65	87
MRH 10 XT 195	0	19	38	57	76
MRH 10 XT 234	0	16	32	47	63
MRH 10 XT 269	0	14	28	41	55
MRH 10 XT 322	0	12	23	35	46

MRH 10 RV

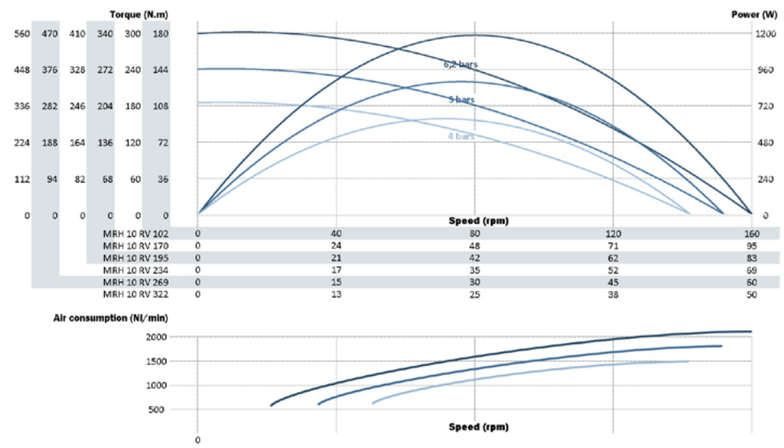

	0	40	80	120	160
MRH 10 RV 102	0	40	80	120	160
MRH 10 RV 170	0	24	48	71	95
MRH 10 RV 195	0	21	42	62	83
MRH 10 RV 234	0	17	35	52	69
MRH 10 RV 269	0	15	30	45	60
MRH 10 RV 322	0	13	25	38	50

MAXIMUM RADIAL & AXIAL LOAD

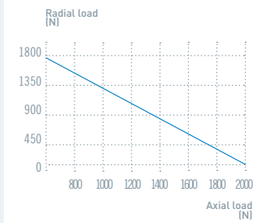

for 100 millions revolutions
(load applied @ half shaft length)

NOTES

modec moteurs & solutions pneumatiques