CKD

New Products

Electric Actuator
KBX Series

Motors and controllers
Set type

From one to four axes

Module assembly

CKD Corporation

CC-1275A 1

Flexible combination of modules allows application in a variety of transporting situations

Motor Controller Set type

Electric actuator

KBX SERIES

Variations are made unlimited simply by rearranging standard parts.

2 axes XY type

2 axes XZ type

2 axes YZ type

Easy construction of orthogonal transport systems to match a variety of processes.

3 axes XYZ type

4 axes XYZR type

It can even trace complex 3D shapes quickly and accurately

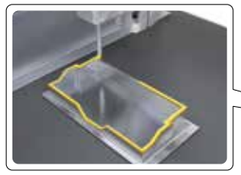

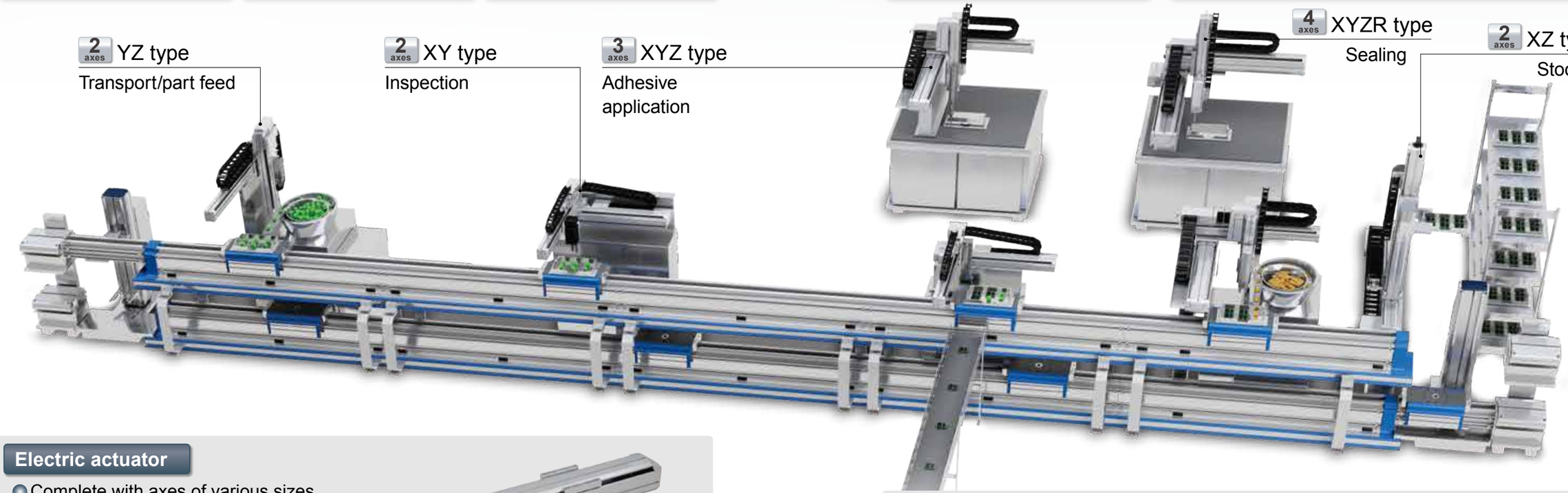

Electric actuator

- Complete with axes of various sizes.
- Max. load capacity 250 kg (ball screw drive).
- Max. stroke length 4,450 mm (timing belt drive).
- Use a no lubrication sealant to make it a long term maintenance-free unit.

Controller

- Connect single axis controllers with link cables to make a multi-axis controller.
- High tact, max. 4 axes simultaneous control, and complex sealing available.

KBX Series

Product lineup [Actuators]

For transporting light loads ♦Max. load capacity 4 kg ▶ 30 kg

Selection guide: pages 2 to 3
Specifications: pages 10 to 17
Model No.: pages 18 to 20

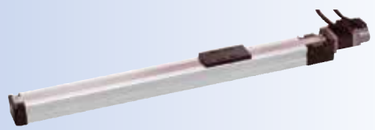

KBX-T5D (Ball screw drive)
- Motor output (W) 50
- Stroke (mm) ..... 50 to 500
- Max. load capacity (kg) *1)..... 10 (horizontal), 3 (vertical)
- Max. speed (mm/s) *2) 800
- Repeatability (mm) ..... ±0.02

Dimensions: page 22

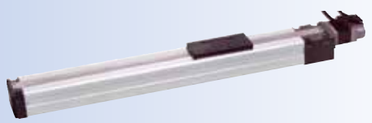

KBX-T7D (Ball screw drive)
- Motor output (W) 50
- Stroke (mm) ..... 50 to 700
- Max. load capacity (kg) *1)..... 30 (horizontal), 8 (vertical)
- Max. speed (mm/s) *2) 800
- Repeatability (mm) ..... ±0.02

Dimensions: page 23

KBX-T3D (ball screw drive) rod
- Motor output (W) 50
- Stroke (mm) ..... 50 to 150
- Max. load capacity (kg) ..... 4 (horizontal), 1.9 (vertical)
- Max. speed (mm/s) 600
- Repeatability (mm) ..... ±0.02

Dimensions: page 50

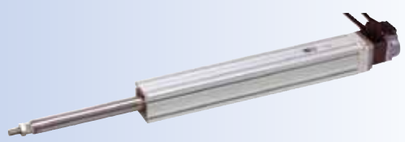

KBX-T4D (ball screw drive) rod
- Motor output (W) 50
- Stroke (mm) ..... 50 to 200
- Max. load capacity (kg) ..... 7 (horizontal), 3.1 (vertical)
- Max. speed (mm/s) 600
- Repeatability (mm) ..... ±0.02

Dimensions: page 51

KBX-T5E (ball screw drive) rod
- Motor output (W) 100
- Stroke (mm) ..... 50 to 300
- Max. load capacity (kg) ..... 25 (horizontal), 6.5 (vertical)
- Max. speed (mm/s) *2) 600
- Repeatability (mm) ..... ±0.02

Dimensions: page 52

KBX-00D-RH R-axis (harmonic drive)
- Motor output (W) 50
- Max. load capacity (kg) 10
- Rotation range..... 360°
- Max. Speed (°/s)..... 360
- Repeatability (°)..... ±0.025

Dimensions: page 54

KBX-00D-RP R-axis (planet gear)
- Motor output (W) 50
- Max. load capacity (kg) 10
- Rotation range..... 360°
- Max. Speed (°/s)..... 857
- Repeatability (°)..... ±0.125

Dimensions: page 55

*1) Load capacity varies depending on the lead and motor output.
*2) Speed varies depending on the lead and stroke.

For transporting medium loads ♦Max. load capacity 15 kg ▶ 100 kg

Selection guide: pages 2 to 3
Specifications: pages 10 to 17
Model No.: pages 18 to 20

KBX-10 (Ball screw drive)
- Motor output (W) 100
- Stroke (mm) ..... 100 to 1250
- Max. load capacity (kg) *1)..... 80 (horizontal), 22 (vertical)
- Max. speed (mm/s) *2) 1200
- Repeatability (mm) ..... ±0.01

Dimensions: pages 24 to 25

KBX-30 (Ball screw drive)
- Motor output (W) 100, 200
- Stroke (mm) ..... 100 to 1250
- Max. load capacity (kg) *1)..... 100 (horizontal), 40 (vertical)
- Max. speed (mm/s) *2) 1200
- Repeatability (mm) ..... ±0.01

Dimensions: pages 26 to 29

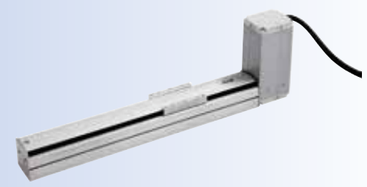

KBX-10 (timing belt drive)
- Motor output (W) 100, 200
- Stroke (mm) ..... 100 to 2550
- Max. load capacity (kg) *1)..... 20 (horizontal)
- Max. speed (mm/s) *2) 2000
- Repeatability (mm) ..... ±0.04

Dimensions: pages 36 to 39

KBX-30 (timing belt drive)
- Motor output (W) 100, 200
- Stroke (mm) ..... 100 to 3200
- Max. load capacity (kg) *1)..... 40 (horizontal)
- Max. speed (mm/s) *2) 2000
- Repeatability (mm) ..... ±0.04

Dimensions: pages 40 to 43

KBX-50 (timing belt drive)
- Motor output (W) 200, 400
- Stroke (mm) ..... 200 to 3500
- Max. load capacity (kg) *1)..... 40 (horizontal)
- Max. speed (mm/s) *2) 2000
- Repeatability (mm) ..... ±0.04

Dimensions: pages 44 to 47

*1) Load capacity varies depending on the lead and motor output.
*2) Speed varies depending on the lead and stroke.

For transporting heavy loads ♦Max. load capacity 60 kg ▶ 250 kg

Selection guide: pages 2 to 3
Specifications: pages 10 to 17
Model No.: pages 18 to 20

KBX-50 (Ball screw drive)

- Motor output (W) 200, 400
- Stroke (mm) ..... 200 to 1600
- Max. load capacity (kg) *1).... 150 (horizontal), 60 (vertical)
- Max. Speed (mm/s) *2) ..... 1,200 (stroke 600 mm or less, lead 20 mm)
- Repeatability (mm) ..... ±0.01

Dimensions: pages 30 to 33

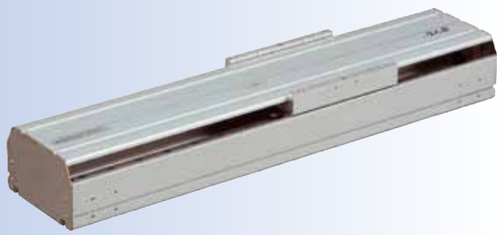

KBX-60 (Ball screw drive)

- Motor output (W) 400, 750
- Stroke (mm) ..... 150 to 1700
- Max. load capacity (kg) *1)....250 (horizontal), 100 (vertical)
- Max. Speed (mm/s) *2)
  .....1,200 (stroke 700 mm or less, lead 20 mm 400 W)
  2,300 (stroke 1,000 mm or less, lead 50 mm 750 W)
- Repeatability (mm) ..... ±0.01

Dimensions: pages 34 to 35

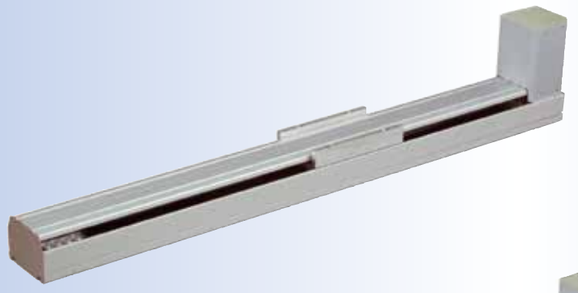

KBX-50 (timing belt drive)

- Motor output (W) 400
- Stroke (mm) ..... 150 to 4450
- Max. load capacity (kg) ..... 100 (horizontal)
- Max. speed (mm/s) 1000
- Repeatability (mm) ..... ±0.05

Dimensions: page 48

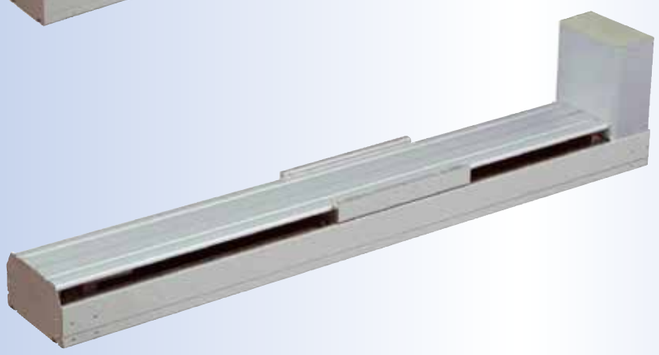

KBX-60 (timing belt drive)

- Motor output (W) 750
- Stroke (mm) ..... 150 to 4450
- Max. load capacity (kg) ..... 200 (horizontal)
- Max. speed (mm/s) 1000
- Repeatability (mm) ..... ±0.05

Dimensions: page 49

*1) Load capacity varies depending on the lead and motor output.
*2) Speed varies depending on the lead and stroke.

[Orthogonal axis specifications] typical example

Other combinations are also possible.

2 axes X-Y type

Selection guide: page 4
Combination table: page 62
Specifications, dimensions: pages 64 to 84

2 axes X-Z type

Selection guide: page 4
Combination table: page 62
Specifications, dimensions: pages 85 to 96

2 axes Y-Z type

Selection guide: page 5
Combination table: page 62
Specifications, dimensions: pages 97 to 109

2 axes Z-Y type

Selection guide: page 5
Combination table: page 62
Specifications, dimensions: pages 110 to 120

3 axes X-Y-Z type

Selection guide: pages 6 to 7
Combination table: page 63
Specifications, dimensions: pages 121 to 141

4 axes Y-Y-Z-R type

Selection guide: page 8
Combination table: page 63
Specifications, dimensions: pages 142 to 149

KBZ Series

KBZ-5D-ST-M, 7D-ST-M (Slider)

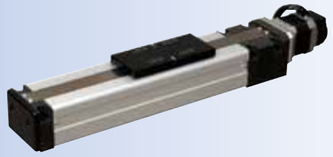

- Motor output (W) 50
- Stroke (mm) ..... 50 to 700
- Max. load capacity (kg) *1)
  .....12.0 (horizontal), 4.0 (vertical)
- Max. speed (mm/s) *1) 800
- Repeatability (mm) ..... ±0.02

Specifications: page 56, dimensions: page 58

KBZ-5D-ST-T, 7D-ST-T (Table type)

- Motor output (W) 50
- Stroke (mm) ..... 50 to 150
- Max. load capacity (kg) *1)
  .....9.0 (horizontal), 3.5 (vertical)
- Max. speed (mm/s) *1) 800
- Repeatability (mm) ..... ±0.02

Specifications: page 56, dimensions: page 59

KBZ-3D-ST-C, 4D-ST-C (Rod)

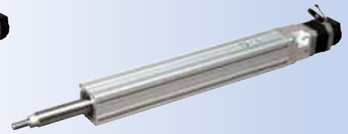

- Motor output (W) 50
- Stroke (mm) ..... 50 to 200
- Max. load capacity (kg) *1)
  .....5.2 (horizontal), 2.2 (vertical)
- Max. speed (mm/s) *1) 600
- Repeatability (mm) ..... ±0.02

Specifications: page 56, dimensions: page 60

*1) Load capacity varies depending on the lead

Product lineup [Controllers]

[Control part] Controller for KBX

Master (Scanner) unit
Pages 174 to 180

KCA-25-M10

KCA-25-M40
KCA-25-M80

Slave (Adapter) unit
Pages 181 to 185

KCA-25-S10

KCA-25-S40
KCA-25-S80

Controller with option unit

With Extension I/O unit
Pages 186 to 187

With CC-Link unit
Pages 188 to 190

With DeviceNet unit
Pages 191 to 193

Regenerative discharge unit
For KBX, pages 194 to 196
For KBZ, pages 216 to 217

[For KBX] KCA-ABSU-2000
KCA-ABSU-4000*
* ABSU-4000 has a fan mounted to the bottom.
[For KBZ] KCA-CAR-*

KCA-ABSU-8000

Handy terminal (common to KBX and KBZ)
Page 197

KCA-TPH-4C

Controller for KBZ

Master (Scanner) unit
KCA-01-M05
Pages 204 to 206

Slave (Adapter) unit
KCA-01-S05
Pages 212 to 214

High function master (Scanner) unit
KCA-20-M00
Pages 207 to 211

Basic system configuration

There is an assortment of units required for constructing the electric linear actuator [KBX Series] with a single or orthogonal multi-axis system for each part.

[Shaft body]

Unit name	Model No.	Listed page
Ball screw drive axis slider	KBX-□□□-ST-□□□□-□□	22 to 49
Timing belt drive axis slider	KBX-□□□-B□-□□□□-□□	
Ball screw rod drive axis	KBX-□□□-ST-C□□□-□□	50 to 52
R-axis	KBX-00D-R□-□	54 to 55

[Controller body]

Unit name	Model No.	Listed page
Master (Scanner) unit	KCA-25-M□□-□□C	174 to 180
Slave (Adapter) unit	KCA-25-S□□-□XX	181 to 185

The □ mark represents a code or a number.
Refer to the relevant page.

[Axis-related part]

Unit name	Model No.	Listed page
Axis combination bracket	KBX-□□-BK-□□□	152 to 159
Support guide	KBA-□□-SG-M□□	167 to 168
Controller cable	KBX-10-CC-M□□	160
CN Box	KBA-10-BX-□□□	160 to 163
Flexible tube	KBA-10-FT-□□□	164
Flexible duct	KBA-10-FD-□□□	165
Tube tray	KBA-10-TT-□□□	166
Sleeve cone	KBA-10-SC-A 02	169
Cable grip	KBA-10-CG-M2□	170

[Control-related part]

Unit name	Model No.	Listed page
I/O cable	KCA-10-IC-□□□	198
Link cable	KCA-10-LC-A□□	197
Regenerative discharge unit	KCA-ABSU-□000	194

The system for the electric linear actuator <<KBX Series>> is composed in the BBS method (unit stacking method) by selecting the units required for constructing the robot system and optional parts. Components are ordered per unit. Set model No. (custom made specifications) can be shipped assembled with the product. Contact CKD Sales for details.

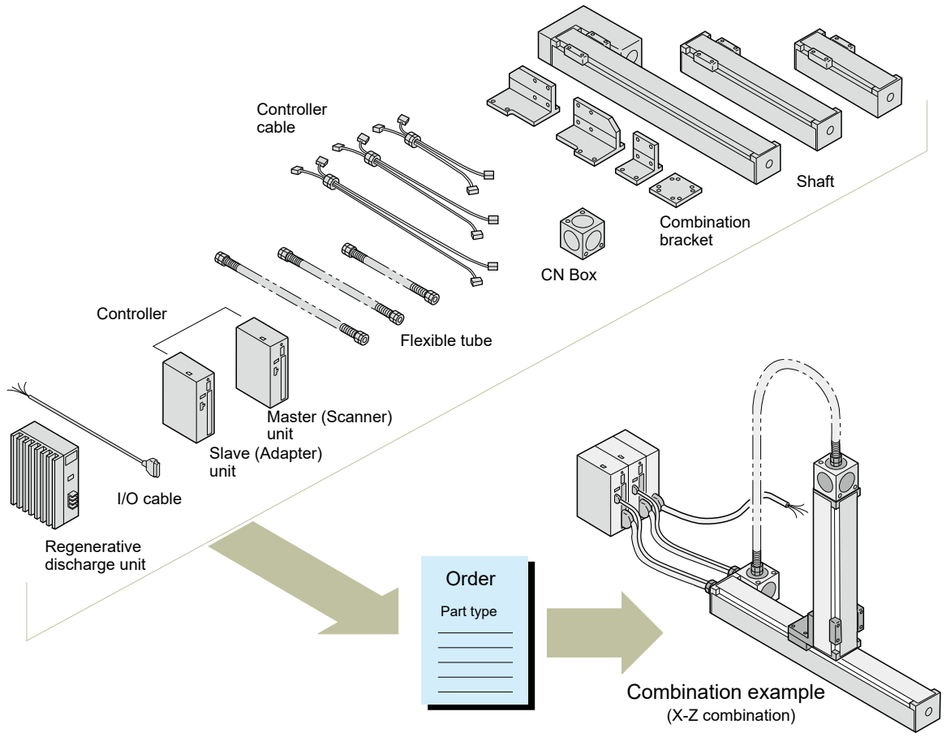

Basic system configuration example

[Orthogonal 2 axes]

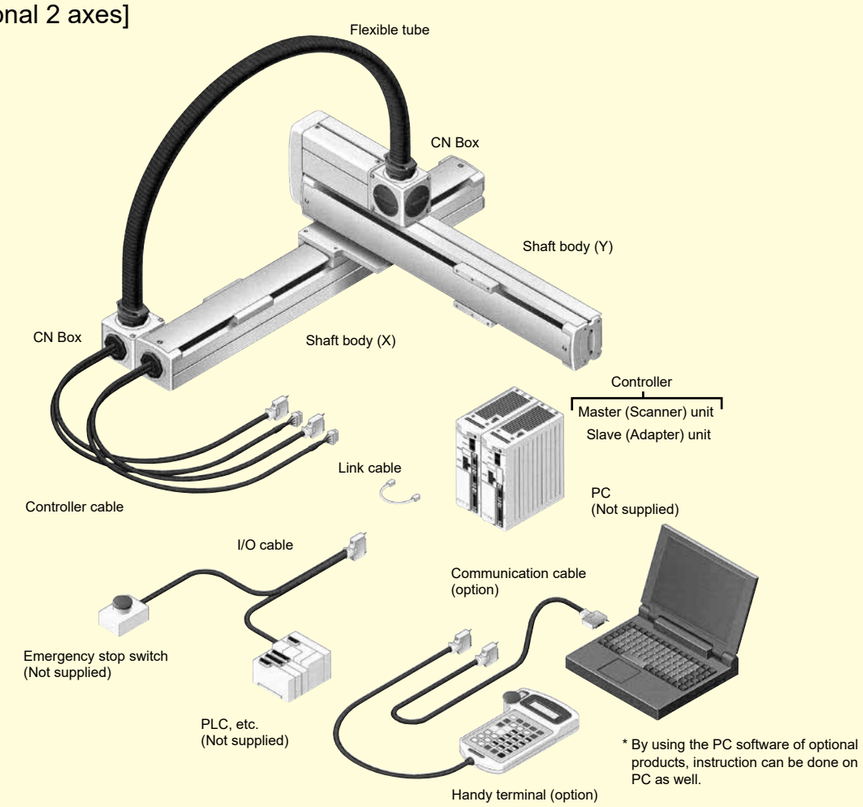

[Example units required for single axis basic system configuration example]

Unit name	Model No.	Part No.	Page
Shaft body	KBX-□□□-ST-□□□N-□□	1	22 to 41
Master (Scanner) unit	KCA-25-M□□-□□C	1	174 to 180
Controller cable	KBX-10-CC-M□□	1	160
R-axis	KBX-00D-R□-□		54 to 55

[Example units required for single axis basic system configuration example]

Unit name	Model No.	Part No.	Page
Straight shaft	KBX-□□□-ST-□□□N-□□	1	22 to 41
Right wrap axis	KBX-□□□-UR-□□□N-□□	1	
Combination bracket	KBX-□□-BK-L02	1	152 to 159
CN Box	KBA-10-BX-□□	2	160
Flexible duct	KBA-10-FD-□□□ } Select one	1	165
Flexible tube	KBA-10-FT-□□□ } Select one	1	164
Controller cable	KBX-10-CC-M□□ (X)	1	160
Controller cable	KBX-10-CC-M□□ (Y)	1	160
Master (Scanner) unit	KCA-25-M□□-□□C	1	174 to 180
Slave (Adapter) unit	KCA-25-S□□-□XX	1	181 to 185
Link cable	KCA-10-LC-A□□	1	197

* Handy terminal and PC software are provided as optional products. Refer to pages 197, 198, and 199.
◆ System upgrade is performed by adding units as needed.
For details, refer to the specifications item for each unit or the relevant optional products item.

MEMO

Selection guide

Selection guide

[Slider (ball screw drive)]

Model No.	Motor capacity (W)	Lead (mm)	Repeatability (mm)	Max. load capacity (kg) *1 Horizontal	Max. load capacity (kg) *1 Vertical
KBX-T5 	50 W	6	±0.02	10	3
		12		5	1.5
KBX-T7 	50 W	6		30	8
		12		12	4
KBX-10 	100 W	5	±0.01	80	15 (22)
		10		40	8 (12)
		20		20	3 (5)
KBX-30 	100 W	5		80	15 (22)
		10		55	8 (12)
		20		30	3 (5)
	200 W	5		100	15 (40)
		10		80	8 (20)
		20		40	3 (10)
KBX-50 	200 W	5		100	15 (40)
		10		100	8 (20)
		20		60	3
	400 W	5		(150)	(60)
		10		(150)	(50)
		20		(100)	(25)
KBX-60 	400 W	10		(150)	(50)
		20		(100)	(25)
	750 W	10		(250)	(100)
		20		(200)	(50)
		50		(50)	-

*1: The value in ( ) for vertical load capacity is the performance when using the regenerative discharge unit.
*2: The time for min. acceleration changes with the max. speed. The stroke varies depending on the slider shape. Refer to the specifications table for details

[Slider (timing belt drive)]

Model No.	Motor capacity (W)	Lead (mm)	Repeatability (mm)	Max. load capacity (kg) *1 Horizontal	Max. load capacity (kg) *1 Vertical
KBX-10 	100 W	21 or equiv.	±0.04	15	-
	200 W	21 or equiv.		20	-
		42 or equiv.		10	-
KBX-30 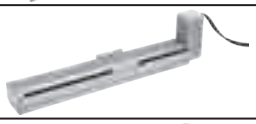	100 W	21 or equiv.		15	-
	200 W	21 or equiv.		40	-
		42 or equiv.		20	-
KBX-50 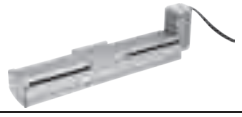	200 W	21 or equiv.		40	-
	400 W	19.555 or equiv.	±0.05	(100)	-
		42 or equiv.	±0.04	(20)	-
KBX-60	750 W	19.555 or equiv.	±0.05	(200)	-

*1: The value in ( ) for horizontal load capacity is the performance when using the regenerative discharge unit.

[Rod (ball screw drive)]

Model No.	Motor capacity (W)	Lead (mm)	Repeatability (mm)	Max. load capacity (kg) *1 Horizontal	Max. load capacity (kg) *1 Vertical	Stroke length (mm) and max. speed (mm/s)
KBX-T3 	50 W	12	±0.02	4	1.9	600
KBX-T4	50 W	12		7	3.1	600
KBX-T5	100 W	12		25	6.5	600 / 470

Stroke length (mm): 50, 100, 150, 200, 250, 300, 350, 1200, 1250, 1500, 1600, 1700, 2000, 2200

*1: The value in ( ) for vertical load capacity is the performance when using the regenerative discharge unit.

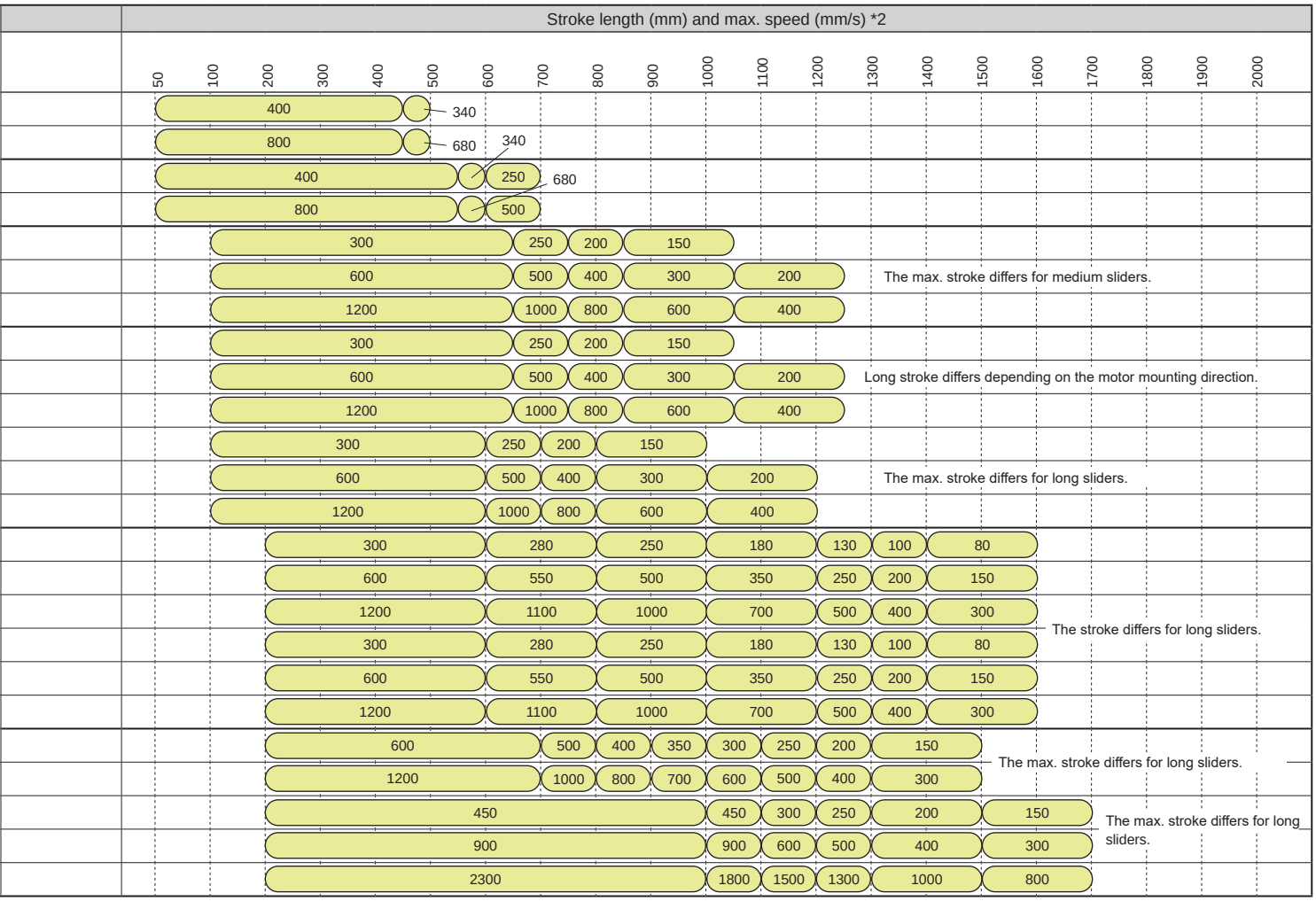

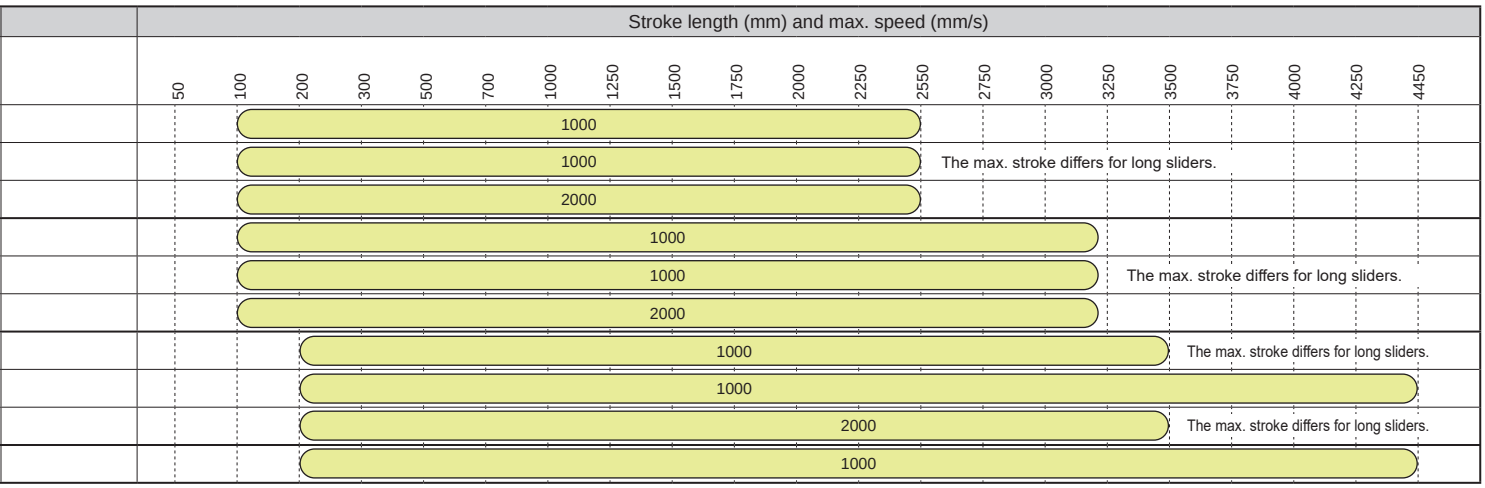

[R-axis]

Model	Motor capacity (W)	Lead (mm)	Repeatability (°)	Max. load capacity (kg) Rotation	Rated output torque (N·m)	Rotation range (°) and max. speed (°/s) 0 30 60 90 120 150 180 210 240 270 300 330 360
KBX-00D-RH (Harmonic drive)	50 W	1/50	±0.025	10	5.4	360
KBX-00D-RP (Planet gear)	50 W	1/21	±0.125	10	3.1	857

*1: The value in ( ) for vertical load capacity is the performance when using the regenerative discharge unit.

X-Y 2 axes combination load capacity table

Pages 64 to 77

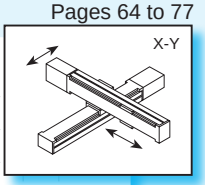

X-axis: ball screw drive, Y-axis: ball screw drive

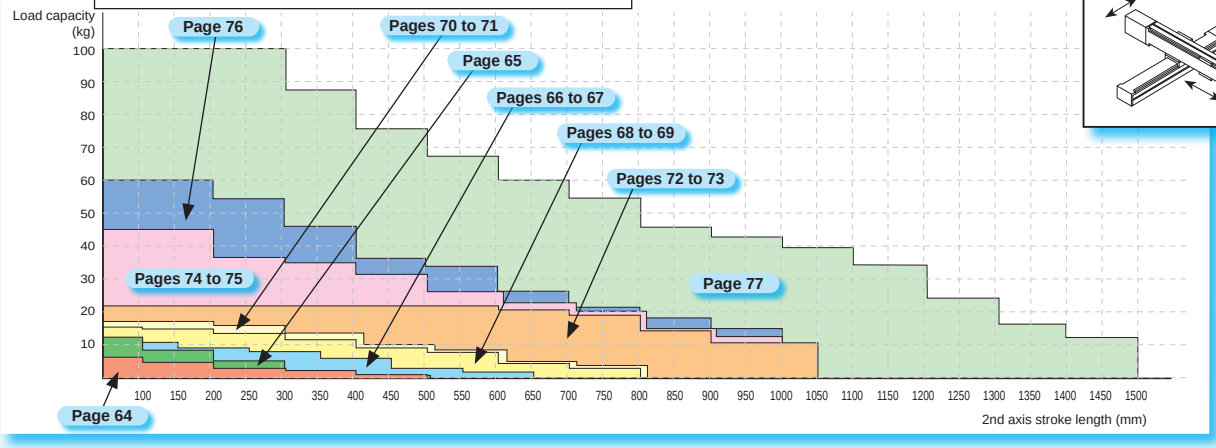

Pages 78 to 84

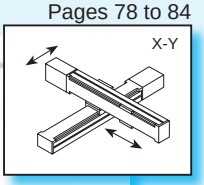

X-axis: timing belt drive, Y-axis: timing belt drive

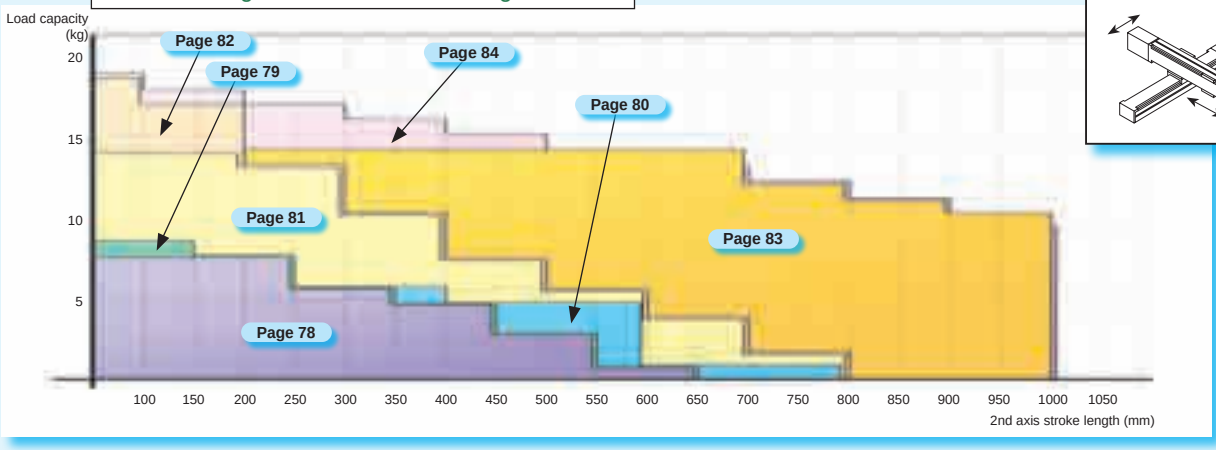

X-Z 2 axes combination load capacity table

Pages 85 to 90

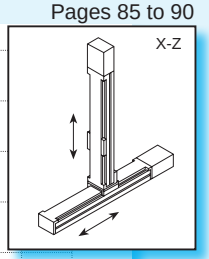

X-axis: ball screw drive, Z-axis: ball screw drive

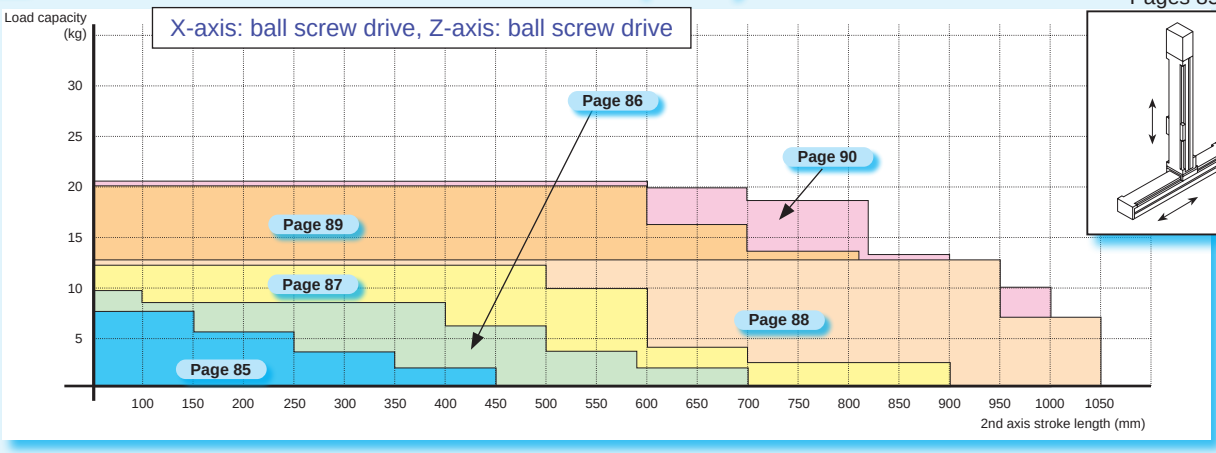

Pages 91 to 96

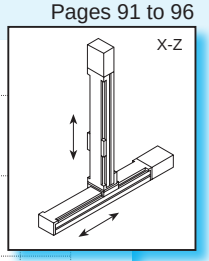

Z-axis: timing belt drive, Z-axis: ball screw drive

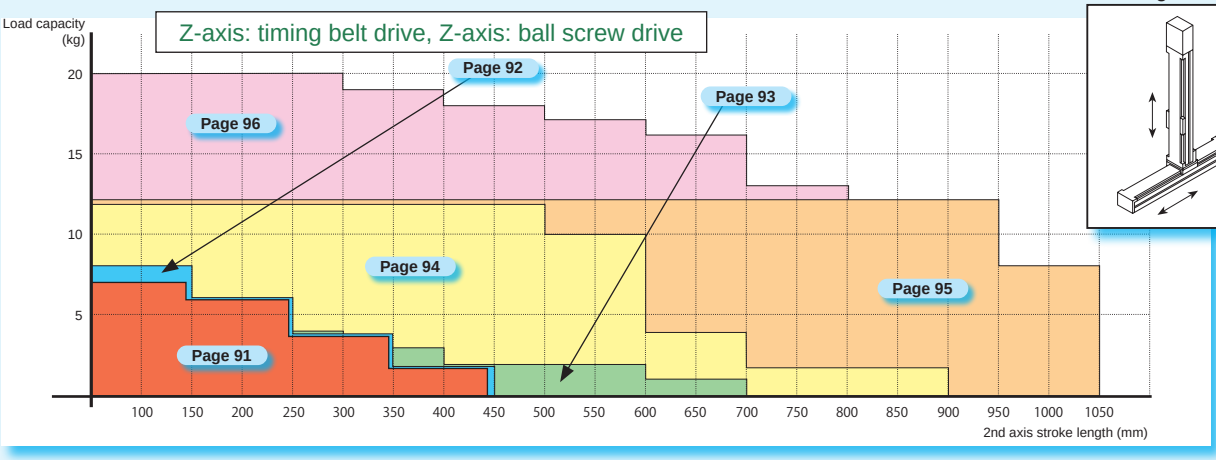

Y-Z 2 axes combination load capacity table

Pages 97 to 103

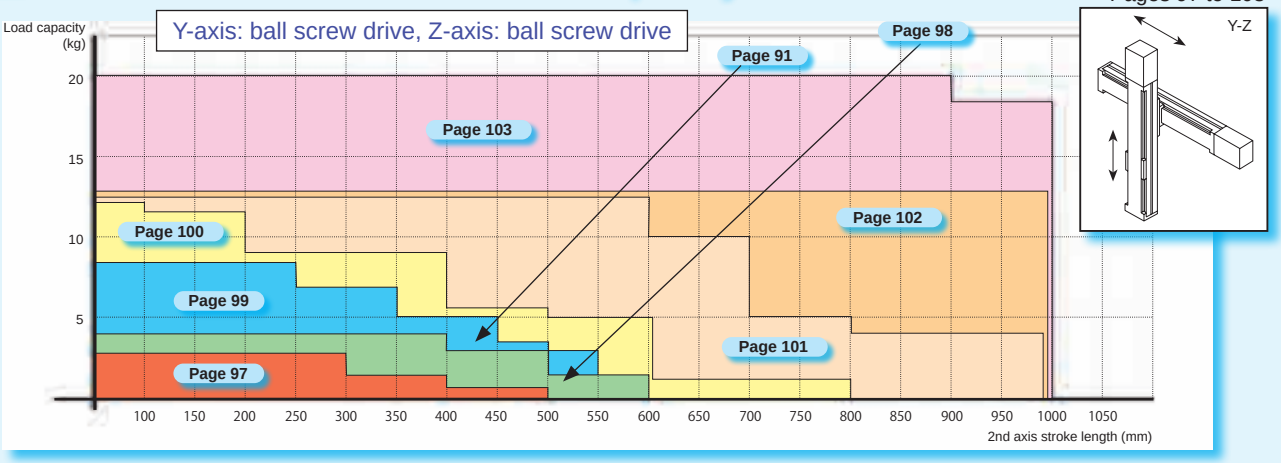

Pages 104 to 109

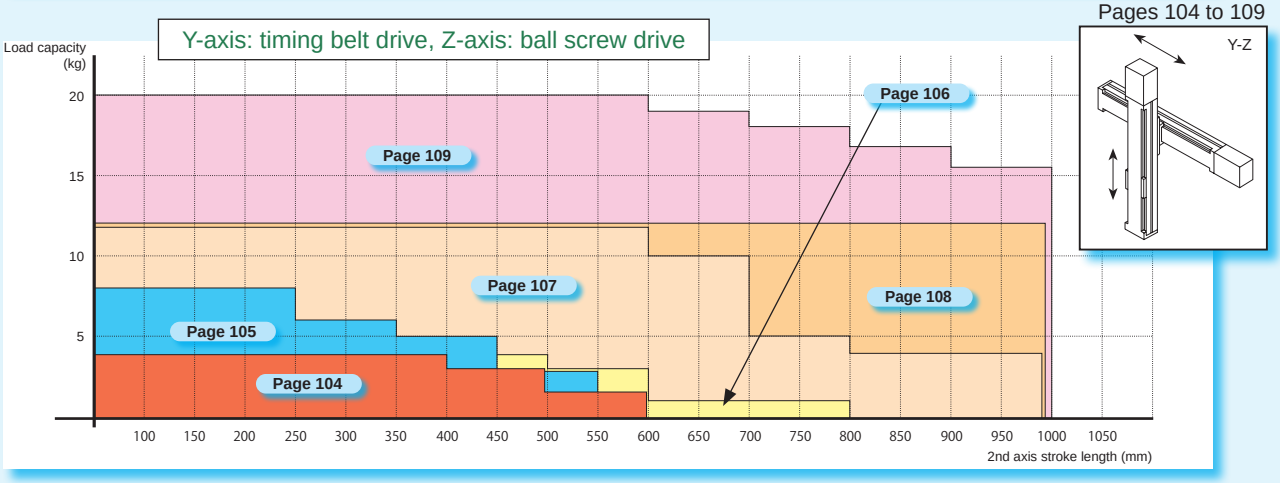

Z-Y 2 axes combination load capacity table

Pages 110 to 114

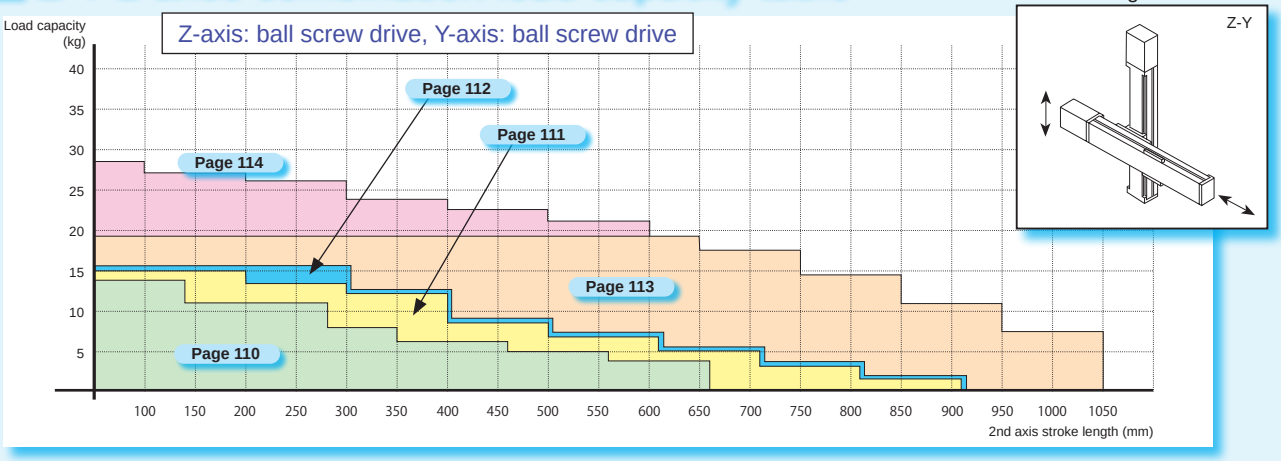

Pages 115 to 120

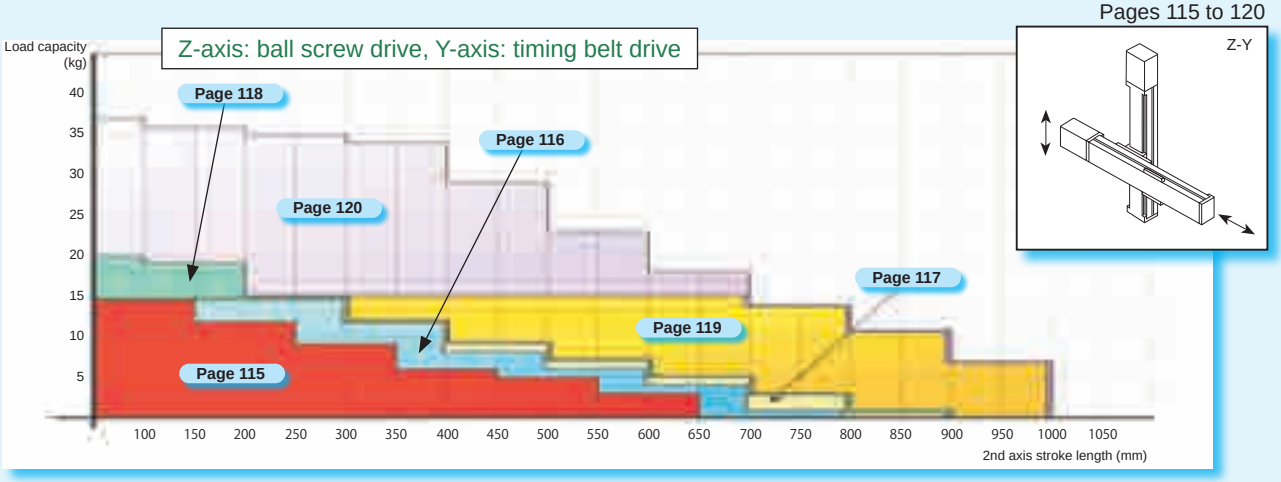

X-Y-Z 3 axes combination load capacity table

X-axis: ball screw drive, Y-axis: ball screw drive, Z-axis: ball screw drive

Pages 121 to 136

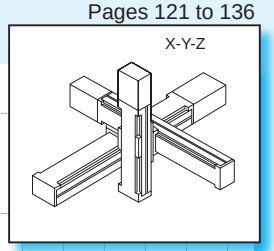

Z-axis stroke 50 to 150 mm

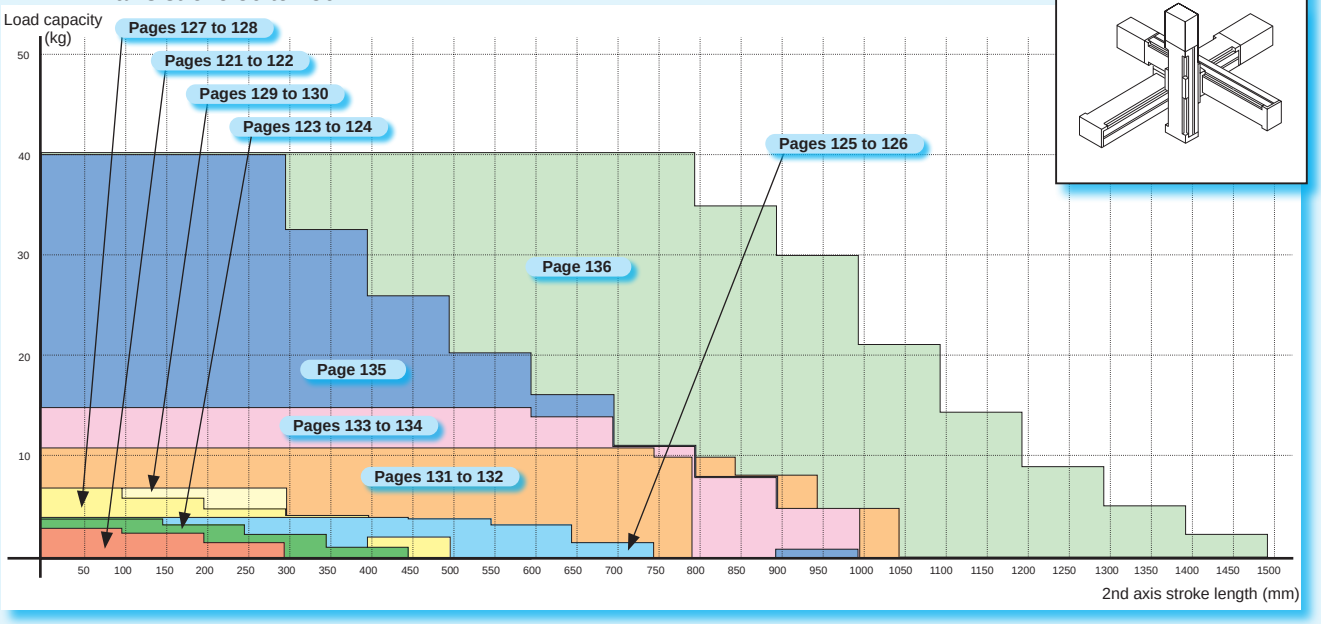

Z-axis stroke 200 to 250 mm

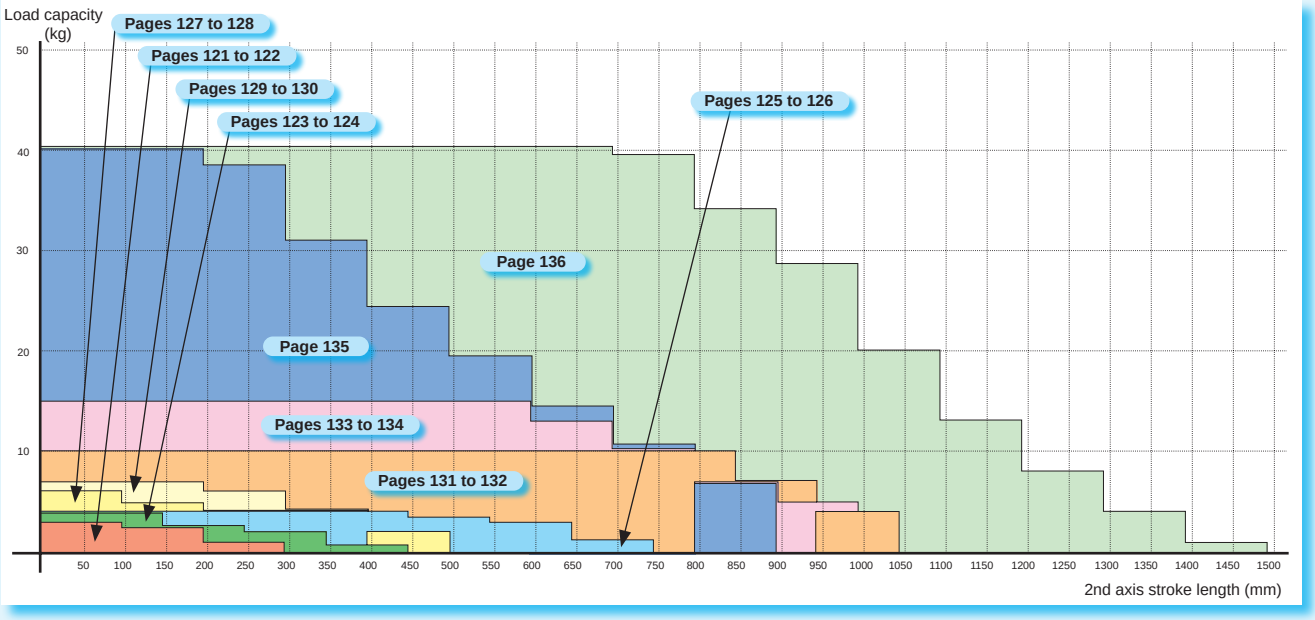

Z-axis stroke 300 to 350 mm

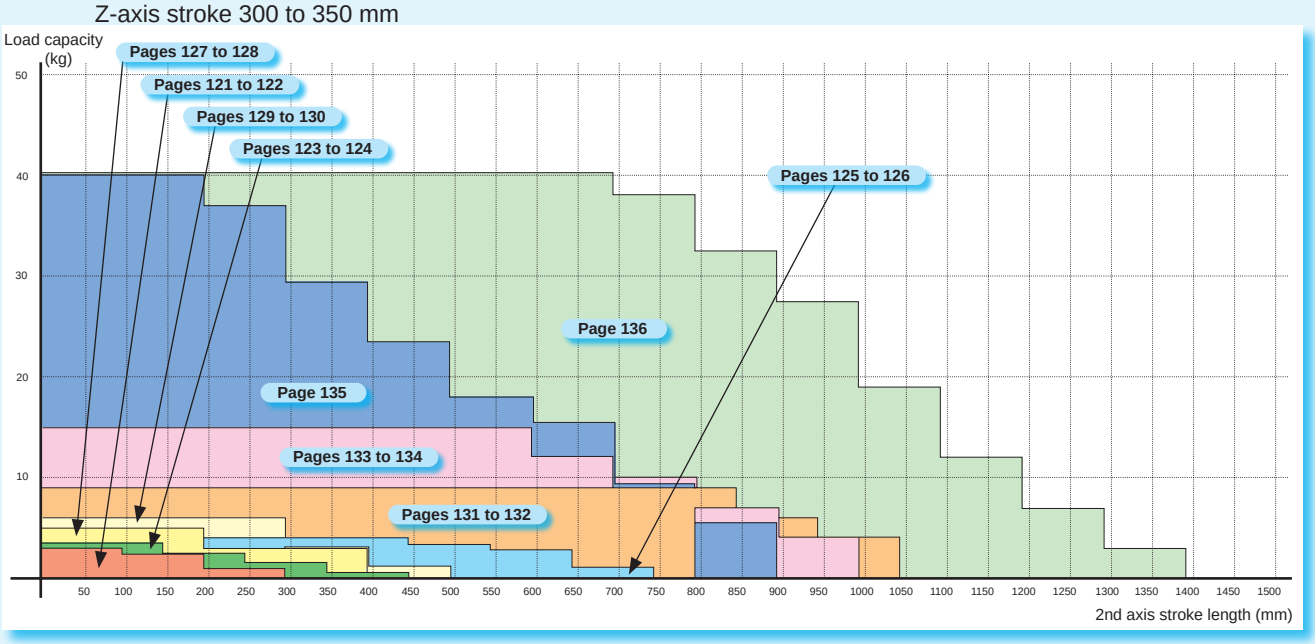

X-Y-Z 3 axes combination load capacity table

X-axis: timing belt drive, Y-axis: timing belt drive, Z-axis: ball screw drive

Pages 137 to 141

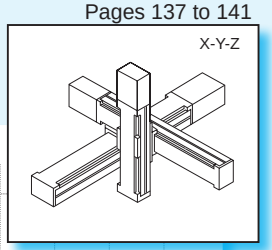

Z-axis stroke 50 to 150 mm

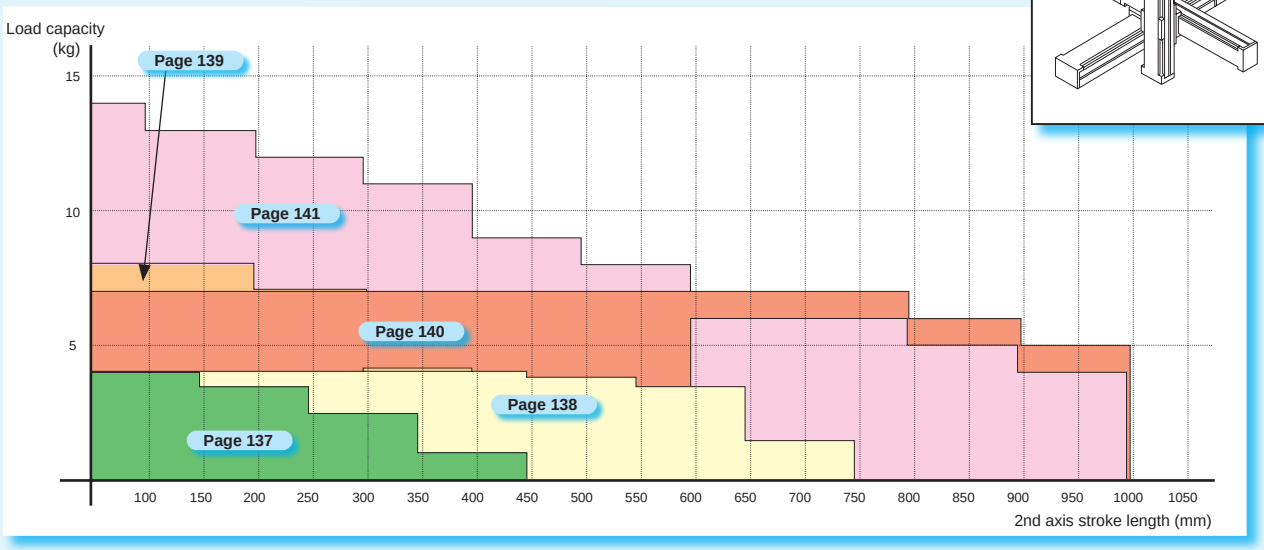

Z-axis stroke 200 to 250 mm

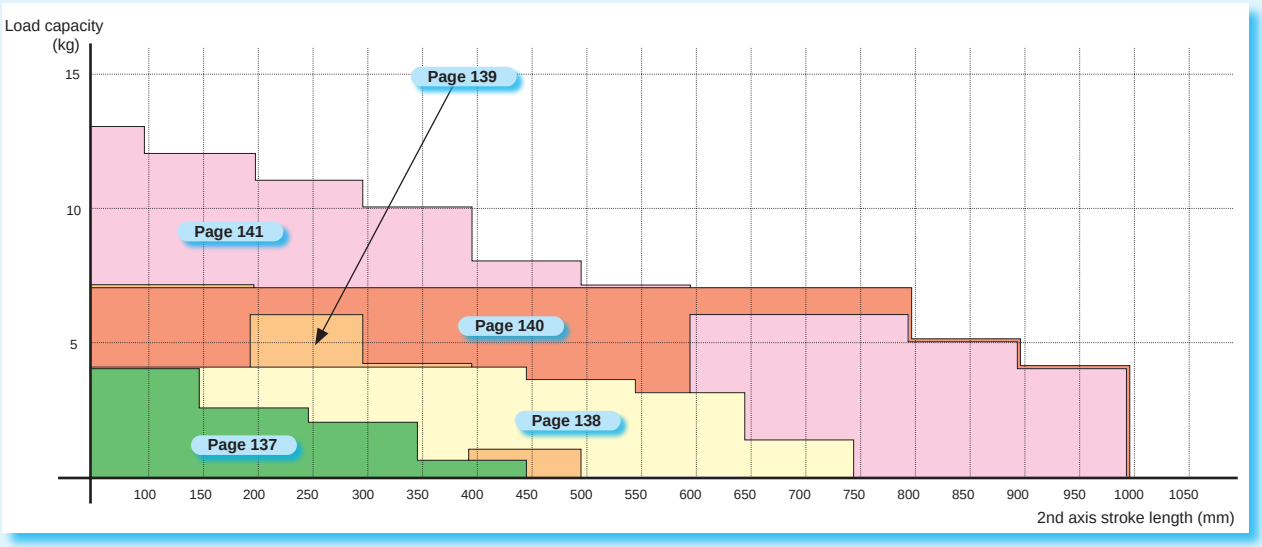

Z-axis stroke 300 to 350 mm

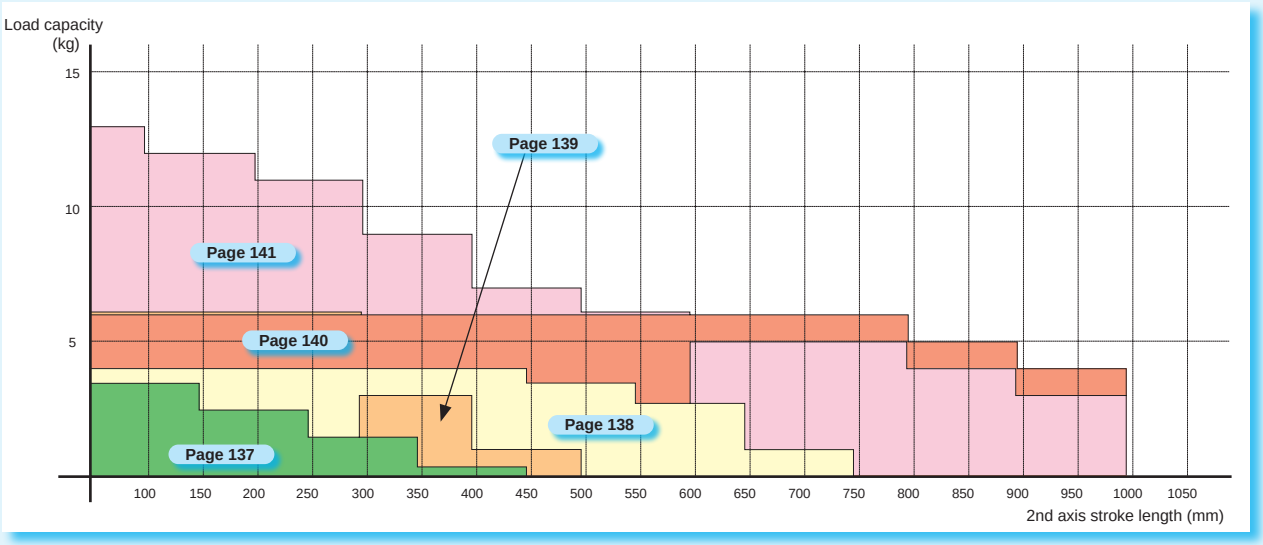

X-Y-Z-R 4 axes combination load capacity table

X-axis: ball screw drive, Y-axis: ball screw drive, Z-axis: ball screw drive, R-axis: rotary shaft

Pages 142 to 149

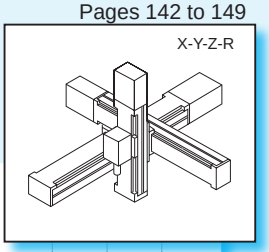

Z-axis stroke 100 mm

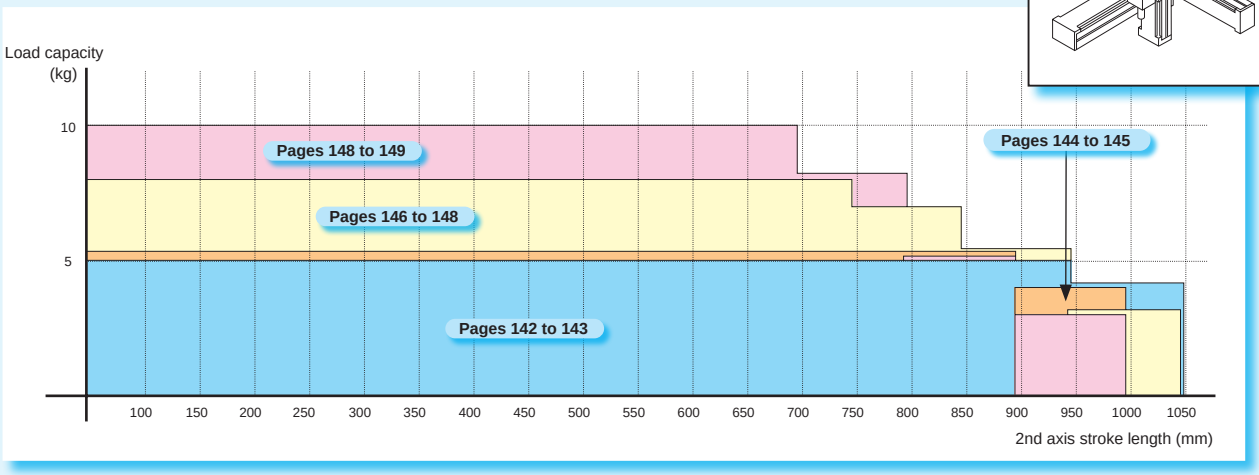

Z-axis stroke 200 mm

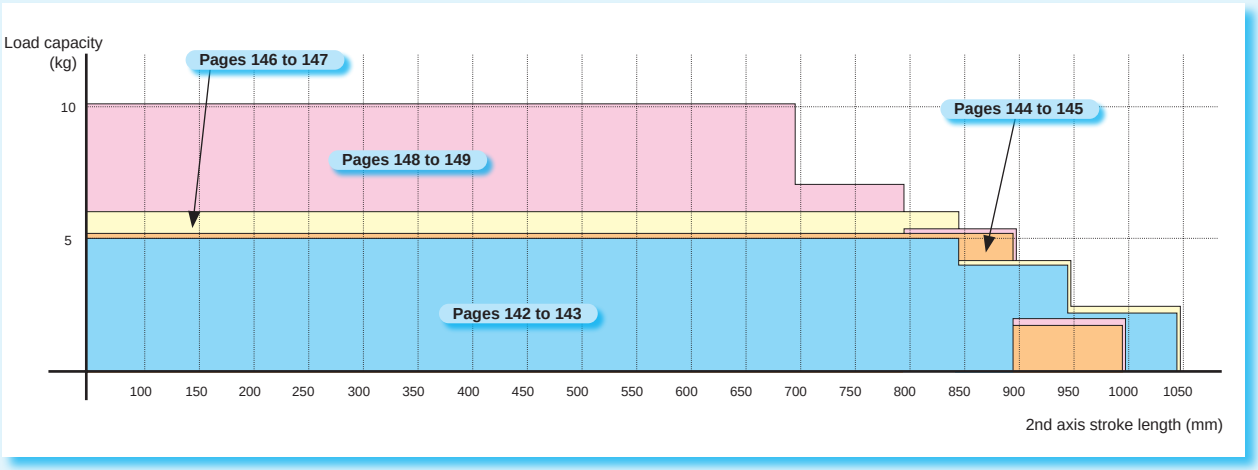

Z-axis stroke 300 mm

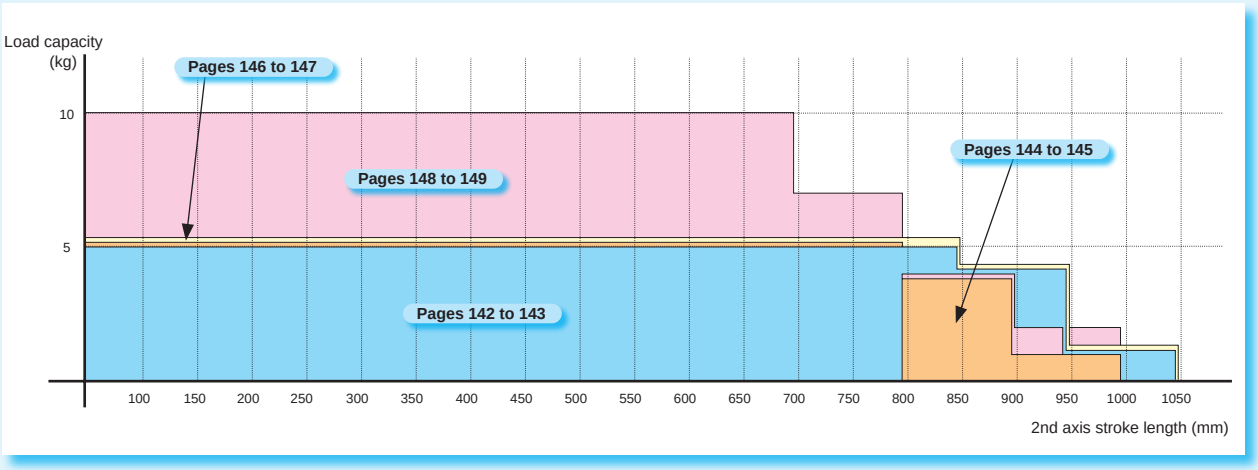

Axis specifications

KBX Series

Slider

KBZ Series

Electric actuator

KBX Series slider

- Drive method, ball screw
- Applicable motors: 50 W, 100 W, 200 W, 400 W, 750 W

Specifications

[Size: T5D, T7D, motor 50 W]

Descriptions			KBX-T5D				KBX-T7D					
Drive method			Rolled ball screw, outer diameter: 8 mm				Rolled ball screw, outer diameter: 12 mm					
Motor			50 W AC servo motor (absolute)				50 W AC servo motor (absolute)					
Shape			Medium slider				Medium slider					
Thread lead		mm	6		12		6			12		
Stroke		mm	to 450	500	to 450	500	to 550	600	700	to 550	600	700
Max. speed		mm/s	400	340	800	680	400	340	250	800	680	500
Max. load capacity	Horizontal	kg	10		5		30			12		
	Vertical	kg	3		1.5		8			4		
	Acceleration/deceleration time	s	0.3		0.3		0.3			0.3		
Repeatability		mm	±0.02				±0.02					
Static allowable moment of load		Nm	MR:31 MP:12 MY:12				MR:58 MP:25.7 MY:25.7					

* For use as a vertical axis, select the type with brake.
* Max. load capacity applies when load is applied to the top of the slider. Also refer to the dynamic load moment data that follows.
* Acceleration/deceleration time is the time it takes to reach the speed specified in the programming.

[Size: 10 short slider, motor: 100 W]

Descriptions			KBX-10E-*-S													
Drive method			Ground ball screw (C7-class), outer diameter: 15 mm													
Motor			100 W AC servo motor (absolute)													
Shape			Short slider													
Thread lead		mm	5				10					20				
Stroke		mm	to 650	750	850	to 1050	to 650	750	850	to 1050	to 1250	to 650	750	850	to 1050	to 1250
Max. speed		mm/s	300	250	200	150	600	500	400	300	200	1200	1000	800	600	400
Max. load capacity	Horizontal	kg	80				40					20				
	Vertical	kg	15 (22)				8 (12)					3 (5)				
	Acceleration/deceleration time	s	0.36	0.30	0.24	0.18	0.36	0.30	0.24	0.18	0.12	0.36	0.30	0.24	0.18	0.12
Repeatability		mm	±0.01													
Static allowable moment of load		Nm	MR:49 MP:14 MY:13													

* For use as a vertical axis, select the type with brake.
* Max. load capacity applies when load is applied to the top of the slider. Also refer to the dynamic load moment data that follows.
* Acceleration/deceleration time is the time it takes to reach the speed specified in the programming.
* The value in ( ) for max. vertical use load capacity applies when mounted with the regenerative discharge unit.

[Size: 10 medium slider, motor: 100 W]

Descriptions			KBX-10E-*-M													
Drive method			Ground ball screw (C7-class), outer diameter: 15 mm													
Motor			100 W AC servo motor (absolute)													
Shape			Medium slider													
Thread lead		mm	5				10					20				
Stroke		mm	to 600	700	800	to 1000	to 600	700	800	to 1000	to 1200	to 600	700	800	to 1000	to 1200
Max. speed		mm/s	300	250	200	150	600	500	400	300	200	1200	1000	800	600	400
Max. load capacity	Horizontal	kg	80				40					20				
	Vertical	kg	15 (22)				8 (12)					3 (5)				
	Acceleration/deceleration time	s	0.36	0.30	0.24	0.18	0.36	0.30	0.24	0.18	0.12	0.36	0.30	0.24	0.18	0.12
Repeatability		mm	±0.01													
Static allowable moment of load		Nm	MR:59 MP:59 MY:54													

* For use as a vertical axis, select the type with brake.
* Max. load capacity applies when load is applied to the top of the slider. Also refer to the dynamic load moment data that follows.
* Acceleration/deceleration time is the time it takes to reach the speed specified in the programming.
* The value in ( ) for max. vertical use load capacity applies when mounted with the regenerative discharge unit.

[Size: 30 medium slider, motor: 100 W]

Descriptions			KBX-30E-*-M													
Drive method			Ground ball screw (C7-class), outer diameter: 15 mm													
Motor			100 W AC servo motor (absolute)													
Shape			Medium slider													
Thread lead		mm	5				10					20				
Stroke	Straight (T)	mm	to 650	750	850	to 1050	to 650	750	850	to 1050	to 1250	to 650	750	850	to 1050	to 1250
	Return (other)	mm	to 600	700	800	to 1000	to 600	700	800	to 1000	to 1200	to 600	700	800	to 1000	to 1200
Max. speed		mm/s	300	250	200	150	600	500	400	300	200	1200	1000	800	600	400
Max. load capacity	Horizontal	kg	80				55					30				
	Vertical	kg	15 (22)				8 (12)					3 (5)				
	Acceleration/deceleration time	s	0.36	0.30	0.24	0.18	0.36	0.30	0.24	0.18	0.12	0.36	0.30	0.24	0.18	0.12
Repeatability		mm	±0.01													
Static allowable moment of load		Nm	MR:510 MP:430 MY:370													

* For use as a vertical axis, select the type with brake.
* Max. load capacity applies when load is applied to the top of the slider. Also refer to the dynamic load moment data that follows.
* Acceleration/deceleration time is the time it takes to reach the speed specified in the programming.
* The value in ( ) for max. vertical use load capacity applies when mounted with the regenerative discharge unit.

[Size: 30 long slider, motor: 100 W]

Descriptions			KBX-30E-*-L													
Drive method			Ground ball screw (C7-class), outer diameter: 15 mm													
Motor			100 W AC servo motor (absolute)													
Shape			Long slider													
Thread lead		mm	5				10					20				
Stroke	Straight (T)	mm	to 650	750	850	to 1050	to 650	750	850	to 1050	to 1250	to 650	750	850	to 1050	to 1250
	Return (other)	mm	to 550	650	750	to 950	to 550	650	750	to 950	to 1150	to 550	650	750	to 950	to 1150
Max. speed		mm/s	300	250	200	150	600	500	400	300	200	1200	1000	800	600	400
Max. load capacity	Horizontal	kg	80				55					30				
	Vertical	kg	15 (22)				8 (12)					3 (5)				
	Acceleration/deceleration time	s	0.36	0.30	0.24	0.18	0.36	0.30	0.24	0.18	0.12	0.36	0.30	0.24	0.18	0.12
Repeatability		mm	±0.01													
Static allowable moment of load		Nm	MR:510 MP:750 MY:650													

* For use as a vertical axis, select the type with brake.
* Max. load capacity applies when load is applied to the top of the slider. Also refer to the dynamic load moment data that follows.
* Acceleration/deceleration time is the time it takes to reach the speed specified in the programming.
* The value in ( ) for max. vertical use load capacity applies when mounted with the regenerative discharge unit.

[Size: 30 medium slider, motor: 200 W]

Descriptions			KBX-30F-*-M													
Drive method			Ground ball screw (C7-class), outer diameter: 15 mm													
Motor			200 W AC servo motor (absolute)													
Shape			Medium slider													
Thread lead		mm	5				10					20				
Stroke		mm	to 600	700	800	to 1000	to 600	700	800	to 1000	to 1200	to 600	700	800	to 1000	to 1200
Max. speed		mm/s	300	250	200	150	600	500	400	300	200	1200	1000	800	600	400
Max. load capacity	Horizontal	kg	100				80					40				
	Vertical	kg	15 (40)				8 (20)					3 (10)				
	Acceleration/deceleration time	s	0.36	0.30	0.24	0.18	0.36	0.30	0.24	0.18	0.12	0.36	0.30	0.24	0.18	0.12
Repeatability		mm	±0.01													
Static allowable moment of load		Nm	MR:510 MP:430 MY:370													

* For use as a vertical axis, select the type with brake.
* Max. load capacity applies when load is applied to the top of the slider. Also refer to the dynamic load moment data that follows.
* Acceleration/deceleration time is the time it takes to reach the speed specified in the programming.
* The value in ( ) for max. vertical use load capacity applies when mounted with the regenerative discharge unit.

[Size: 30 long slider, motor: 200 W]

Descriptions			KBX-30F-*-L													
Drive method			Ground ball screw (C7-class), outer diameter: 15 mm													
Motor			200 W AC servo motor (absolute)													
Shape			Long slider													
Thread lead		mm	5				10					20				
Stroke		mm	to 550	650	750	to 950	to 550	650	750	to 950	to 1150	to 550	650	750	to 950	to 1150
Max. speed		mm/s	300	250	200	150	600	500	400	300	200	1200	1000	800	600	400
Max. load capacity	Horizontal	kg	100				80					40				
	Vertical	kg	15 (40)				8 (20)					3 (10)				
	Acceleration/deceleration time	s	0.36	0.30	0.24	0.18	0.36	0.30	0.24	0.18	0.12	0.36	0.30	0.24	0.18	0.12
Repeatability		mm	±0.01													
Static allowable moment of load		Nm	MR:510 MP:750 MY:650													

* For use as a vertical axis, select the type with brake.
* Max. load capacity applies when load is applied to the top of the slider. Also refer to the dynamic load moment data that follows.
* Acceleration/deceleration time is the time it takes to reach the speed specified in the programming.
* The value in ( ) for max. vertical use load capacity applies when mounted with the regenerative discharge unit.

[Size: 50 medium slider, motor: 200 W]

Descriptions		KBX-50F-*-M																				
Drive method		Ground ball screw (C7-class), outer diameter: 20 mm																				
Motor		200 W AC servo motor (absolute)																				
Shape		Medium slider																				
Thread lead	mm	5							10							20						
Stroke	mm	to 600	to 800	to 1000	to 1200	1300	1400	to 1600	to 600	to 800	to 1000	to 1200	1300	1400	to 1600	to 600	to 800	to 1000	to 1200	1300	1400	to 1600
Max. speed	mm/s	300	280	250	180	130	100	80	600	550	500	350	250	200	150	1200	1100	1000	700	500	400	300
Max. load capacity	Horizontal kg	100							100							(50) (*1)						
	Vertical kg	15 (40)							8 (20)							3						
	Acceleration/deceleration time s	0.36	0.33	0.30	0.21	0.15	0.12	0.10	0.36	0.33	0.30	0.21	0.15	0.12	0.10	0.36	0.33	0.30	0.21	0.15	0.12	0.10
Repeatability	mm	±0.01																				
Static allowable moment of load	Nm	MR:2080 MP:2160 MY:1820																				

* For use as a vertical axis, select the type with brake.
* Max. load capacity applies when load is applied to the top of the slider. Also refer to the dynamic load moment data that follows.
* Acceleration/deceleration time is the time it takes to reach the speed specified in the programming.
* The value in ( ) for max. vertical use load capacity applies when mounted with the regenerative discharge unit.
*1: When speed is 1,000 mm/s or greater, max. load capacity is 50 kg.

[Size: 50 long slider, motor: 200 W]

Descriptions		KBX-50F-*-L																				
Drive method		Ground ball screw (C7-class), outer diameter: 20 mm																				
Motor		200 W AC servo motor (absolute)																				
Shape		Long slider																				
Thread lead	mm	5							10							20						
Stroke	mm	to 550	to 750	to 950	to 1150	1250	1350	to 1550	to 550	to 750	to 950	to 1150	1250	1350	to 1550	to 550	to 750	to 950	to 1150	1250	1350	to 1550
Max. speed	mm/s	300	280	250	180	130	100	80	600	550	500	350	250	200	150	1200	1100	1000	700	500	400	300
Max. load capacity	Horizontal kg	100							100							60 (*1)						
	Vertical kg	15 (40)							8 (20)							3						
	Acceleration/deceleration time s	0.36	0.33	0.30	0.21	0.15	0.12	0.10	0.36	0.33	0.30	0.21	0.15	0.12	0.10	0.36	0.33	0.30	0.21	0.15	0.12	0.10
Repeatability	mm	±0.01																				
Static allowable moment of load	Nm	MR:2080 MP:3150 MY:2640																				

* For use as a vertical axis, select the type with brake.
* Max. load capacity applies when load is applied to the top of the slider. Also refer to the dynamic load moment data that follows.
* Acceleration/deceleration time is the time it takes to reach the speed specified in the programming.
* The value in ( ) for max. vertical use load capacity applies when mounted with the regenerative discharge unit.
*1: When speed is 1,000 mm/s or greater, max. load capacity is 50 kg.

[Size: 50 medium slider, motor: 400 W]

Descriptions		KBX-50G-*-M																				
Drive method		Ground ball screw (C7-class), outer diameter: 20 mm																				
Motor		400 W AC servo motor (absolute)																				
Shape		Medium slider																				
Thread lead	mm	5							10							20						
Stroke	mm	to 600	to 800	to 1000	to 1200	1300	1400	to 1600	to 600	to 800	to 1000	to 1200	1300	1400	to 1600	to 600	to 800	to 1000	to 1200	1300	1400	to 1600
Max. speed	mm/s	300	280	250	180	130	100	80	600	550	500	350	250	200	150	1200	1100	1000	700	500	400	300
Max. load capacity	Horizontal kg	150							150							100						
	Vertical kg	60							50							25						
	Acceleration/deceleration time s	0.36	0.33	0.30	0.21	0.15	0.12	0.10	0.36	0.33	0.30	0.21	0.15	0.12	0.10	0.36	0.33	0.30	0.21	0.15	0.12	0.10
Repeatability	mm	±0.01																				
Static allowable moment of load	Nm	MR:2080 MP:2160 MY:1820																				

* For use as a vertical axis, select the type with brake.
* Max. load capacity applies when load is applied to the top of the slider. Also refer to the dynamic load moment data that follows.
* Acceleration/deceleration time is the time it takes to reach the speed specified in the programming.
* In both horizontal and vertical use, the regenerative discharge unit is required regardless of load capacity.

[Size: 50 long slider, motor: 400 W]

Descriptions		KBX-50G-*-L																				
Drive method		Ground ball screw (C7-class), outer diameter: 20 mm																				
Motor		400 W AC servo motor (absolute)																				
Shape		Long slider																				
Thread lead	mm	5							10							20						
Stroke	mm	to 550	to 750	to 950	to 1150	1250	1350	to 1550	to 550	to 750	to 950	to 1150	1250	1350	to 1550	to 550	to 750	to 950	to 1150	1250	1350	to 1550
Max. speed	mm/s	300	280	250	180	130	100	80	600	550	500	350	250	200	150	1200	1100	1000	700	500	400	300
Max. load capacity	Horizontal kg	150							150							100						
	Vertical kg	60							50							25						
	Acceleration/deceleration time s	0.36	0.33	0.30	0.21	0.15	0.12	0.10	0.36	0.33	0.30	0.21	0.15	0.12	0.10	0.36	0.33	0.30	0.21	0.15	0.12	0.10
Repeatability	mm	±0.01																				
Static allowable moment of load	Nm	MR:2080 MP:3150 MY:2640																				

* For use as a vertical axis, select the type with brake.
* Max. load capacity applies when load is applied to the top of the slider. Also refer to the dynamic load moment data that follows.
* Acceleration/deceleration time is the time it takes to reach the speed specified in the programming.
* In both horizontal and vertical use, the regenerative discharge unit is required regardless of load capacity.

[Size: 60 medium slider, motor: 400 W]

Descriptions		KBX-60G-*-M															
Drive method		Ground ball screw (C7-class), outer diameter: 20 mm															
Motor		400 W AC servo motor (absolute)															
Shape		Medium slider															
Thread lead	mm	10								20							
Stroke	mm	to 700	800	900	1000	1100	1200	1300	to 1500	to 700	800	900	1000	1100	1200	1300	to 1500
Max. speed	mm/s	600	500	400	350	300	250	200	150	1200	1000	800	700	600	500	400	300
Max. load capacity	Horizontal kg	150								100							
	Vertical kg	50								25							
	Acceleration/deceleration time s	0.36	0.30	0.24	0.21	0.18	0.15	0.12	0.10	0.36	0.30	0.24	0.21	0.18	0.15	0.12	0.10
Repeatability	mm	±0.01															
Static allowable moment of load	Nm	MR:2700 MP:3000 MY:2250															

* For use as a vertical axis, select the type with brake.
* Max. load capacity applies when load is applied to the top of the slider. Also refer to the dynamic load moment data that follows.
* Acceleration/deceleration time is the time it takes to reach the speed specified in the programming.
* In both horizontal and vertical use, the regenerative discharge unit is required regardless of load capacity.

[Size: 60 long slider, motor: 400 W]

Descriptions		KBX-60G-*-L															
Drive method		Ground ball screw (C7-class), outer diameter: 20 mm															
Motor		400 W AC servo motor (absolute)															
Shape		Long slider															
Thread lead	mm	10								20							
Stroke	mm	to 650	750	850	950	1050	1150	1250	to 1450	to 650	750	850	950	1050	1150	1250	to 1450
Max. speed	mm/s	600	500	400	350	300	250	200	150	1200	1000	800	700	600	500	400	300
Max. load capacity	Horizontal kg	150								100							
	Vertical kg	50								25							
	Acceleration/deceleration time s	0.36	0.30	0.24	0.21	0.18	0.15	0.12	0.10	0.36	0.30	0.24	0.21	0.18	0.15	0.12	0.10
Repeatability	mm	±0.01															
Static allowable moment of load	Nm	MR:2700 MP:4750 MY:3450															

* For use as a vertical axis, select the type with brake.
* Max. load capacity applies when load is applied to the top of the slider. Also refer to the dynamic load moment data that follows.
* Acceleration/deceleration time is the time it takes to reach the speed specified in the programming.
* In both horizontal and vertical use, the regenerative discharge unit is required regardless of load capacity.

[Size: 60 medium slider, motor: 750 W]

Descriptions		KBX-60J-*-M																	
Drive method		Ground ball screw (C7-class), outer diameter: 25 mm																	
Motor		750 W AC servo motor (absolute)																	
Shape		Medium slider																	
Thread lead	mm	10						20						50					
Stroke	mm	to 1000	1100	1200	1300	to 1500	to 1700	to 1000	1100	1200	1300	to 1500	to 1700	to 1000	1100	1200	1300	to 1500	to 1700
Max. speed	mm/s	450	350	300	250	200	150	900	700	600	500	400	300	2300	1800	1500	1300	1000	800
Max. load capacity	Horizontal kg	250						200						50					
	Vertical kg	100						50						-					
	Acceleration/deceleration time s	0.27	0.21	0.18	0.15	0.12	0.10	0.27	0.21	0.18	0.15	0.12	0.10	0.27	0.21	0.18	0.15	0.12	0.10
Repeatability	mm	±0.01																	
Static allowable moment of load	Nm	MR:3500 MP:4000 MY:3000																	

* For use as a vertical axis, select the type with brake.
* Max. load capacity applies when load is applied to the top of the slider. Also refer to the dynamic load moment data that follows.
* Acceleration/deceleration time is the time it takes to reach the speed specified in the programming.
* In both horizontal and vertical use, the regenerative discharge unit is required regardless of load capacity.

[Size: 60 long slider, motor: 750 W]

Descriptions		KBX-60J-*-L																	
Drive method		Ground ball screw (C7-class), outer diameter: 25 mm																	
Motor		750 W AC servo motor (absolute)																	
Shape		Long slider																	
Thread lead	mm	10						20						50					
Stroke	mm	to 950	1050	1150	1250	to 1450	to 1650	to 950	1050	1150	1250	to 1450	to 1650	to 950	1050	1150	1250	to 1450	to 1650
Max. speed	mm/s	450	350	300	250	200	150	900	700	600	500	400	300	2300	1800	1500	1300	1000	800
Max. load capacity	Horizontal kg	250						200						50					
	Vertical kg	100						50						-					
	Acceleration/deceleration time s	0.27	0.21	0.18	0.15	0.12	0.10	0.27	0.21	0.18	0.15	0.12	0.10	0.27	0.21	0.18	0.15	0.12	0.10
Repeatability	mm	±0.01																	
Static allowable moment of load	Nm	MR:3500 MP:6200 MY:4750																	

* For use as a vertical axis, select the type with brake.
* Max. load capacity applies when load is applied to the top of the slider. Also refer to the dynamic load moment data that follows.
* Acceleration/deceleration time is the time it takes to reach the speed specified in the programming.
* In both horizontal and vertical use, the regenerative discharge unit is required regardless of load capacity.

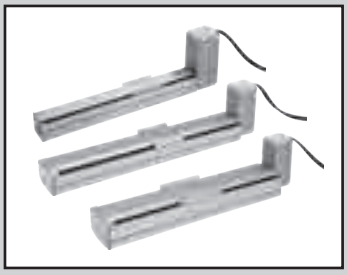

Electric actuator

KBX Series slider

- Drive method: timing belt
- Applicable motors: 100 W, 200 W, 400 W, 750 W

Specifications

[Size: 10 short/medium slider, motor: 100 W]

Descriptions			KBX-10E-B*-S/M	
Drive method			Timing belt	
Motor			100 W AC servo motor (absolute)	
Shape			Short slider	Medium slider
Lead		mm	21 or equiv.	
Stroke		mm	to 2550	to 2500
Max. speed		mm/s	1000	
Max. load capacity	Horizontal	kg	15	
	Acceleration/deceleration time	s	0.3 or more	
Repeatability		mm	±0.04	
Static allowable moment of load		Nm	MR:49 MP:14 MY:13	MR:59 MP:59 MY:54

* Max. load capacity applies when load is applied to the top of the slider. Also refer to the dynamic load moment data that follows.
* Acceleration/deceleration time is the time it takes to reach the speed specified in the programming.

[Size: 10 short/medium slider, motor: 200 W]

Descriptions			KBX-10F-B*-S/M			
Drive method			Timing belt			
Motor			200 W AC servo motor (absolute)			
Shape			Short slider		Medium slider	
Lead		mm	21 or equiv.	42 or equiv.	21 or equiv.	42 or equiv.
Stroke		mm	to 2550		to 2500	
Max. speed		mm/s	1000	2000	1000	2000
Max. load capacity	Horizontal	kg	20	10	20	10
	Acceleration/deceleration time	s	0.3 or more	0.5 or more	0.3 or more	0.5 or more
Repeatability		mm	±0.04			
Static allowable moment of load		Nm	MR:49 MP:14 MY:13		MR:59 MP:59 MY:54	

* Max. load capacity applies when load is applied to the top of the slider. Also refer to the dynamic load moment data that follows.
* Acceleration/deceleration time is the time it takes to reach the speed specified in the programming.

[Size: 30 medium/long slider, motor: 100 W]

Descriptions			KBX-30E-B*-M/L	
Drive method			Timing belt	
Motor			100 W AC servo motor (absolute)	
Shape			Medium slider	Long slider
Lead		mm	21 or equiv.	
Stroke		mm	to 3200	to 3150
Max. speed		mm/s	1000	
Max. load capacity	Horizontal	kg	15	
	Acceleration/deceleration time	s	0.3 or more	
Repeatability		mm	±0.04	
Static allowable moment of load		Nm	MR:510 MP:430 MY:370	MR:510 MP:750 MY:650

* Max. load capacity applies when load is applied to the top of the slider. Also refer to the dynamic load moment data that follows.
* Acceleration/deceleration time is the time it takes to reach the speed specified in the programming.

[Size: 30 medium/long slider, motor: 200 W]

Descriptions			KBX-30F-B*-M/L			
Drive method			Timing belt			
Motor			200 W AC servo motor (absolute)			
Shape			Medium slider		Long slider	
Lead		mm	21 or equiv.	42 or equiv.	21 or equiv.	42 or equiv.
Stroke		mm	to 3200		to 3150	
Max. speed		mm/s	1000	2000	1000	2000
Max. load capacity	Horizontal	kg	40	20	40	20
	Acceleration/deceleration time	s	0.3 or more	0.5 or more	0.3 or more	0.5 or more
Repeatability		mm	±0.04			
Static allowable moment of load		Nm	MR:510 MP:430 MY:370		MR:510 MP:750 MY:650	

* Max. load capacity applies when load is applied to the top of the slider. Also refer to the dynamic load moment data that follows.
* Acceleration/deceleration time is the time it takes to reach the speed specified in the programming.

[Size: 50 medium/long slider, motor: 200 W]

Descriptions			KBX-50F-B*-M/L	
Drive method			Timing belt	
Motor			200 W AC servo motor (absolute)	
Shape			Medium slider	Long slider
Lead		mm	21 or equiv.	
Stroke		mm	to 3500	to 3450
Max. speed		mm/s	1000	
Max. load capacity	Horizontal	kg	40	
	Acceleration/deceleration time	s	0.3 or more	
Repeatability		mm	±0.04	
Static allowable moment of load		Nm	MR:2080 MP:2160 MY:1820	MR:2080 MP:3150 MY:2640

* Max. load capacity applies when load is applied to the top of the slider. Also refer to the dynamic load moment data that follows.
* Acceleration/deceleration time is the time it takes to reach the speed specified in the programming.

[Size: 50 medium/long slider, motor: 400 W]

Descriptions			KBX-50G-B*-M/L			
Drive method			Timing belt			
Motor			400 W AC servo motor (absolute)			
Shape			Medium slider	Long slider		
Lead		mm	42 or equiv.	42 or equiv.	19.555 or equiv.	
Stroke		mm	to 3500	to 3450	to 1000	to 4450
Max. speed		mm/s	2000		1000	
Max. load capacity	Horizontal	kg	20		100	
	Acceleration/deceleration time	s	0.5 or more		0.3 or more	0.6 or more
Repeatability		mm	±0.04		±0.05	
Static allowable moment of load		Nm	MR:2080 MP:2160 MY:1820	MR:2080 MP:3150 MY:2640	MR:1800 MP:2700 MY:2150	

* Max. load capacity applies when load is applied to the top of the slider. Also refer to the dynamic load moment data that follows.
* Acceleration/deceleration time is the time it takes to reach the speed specified in the programming.
* The regenerative discharge unit is required regardless of load capacity.

[Size: 60 medium/long slider, motor: 750 W]

Descriptions			KBX-60J-BT-M/L			
Drive method			Timing belt			
Motor			750 W AC servo motor (absolute)			
Shape			Medium slider		Long slider	
Lead		mm	19.555 or equiv.			
Stroke		mm	to 1000	to 4450	to 1000	to 4350
Max. speed		mm/s	1000			
Max. load capacity	Horizontal	kg	200			
	Acceleration/deceleration time	s	0.3 or more	0.6 or more	0.3 or more	0.6 or more
Repeatability		mm	±0.05			
Static allowable moment of load		Nm	MR:3350 MP:3850 MY:3100		MR:3350 MP:6250 MY:5000	

* Max. load capacity applies when load is applied to the top of the slider. Also refer to the dynamic load moment data that follows.
* Acceleration/deceleration time is the time it takes to reach the speed specified in the programming.
* The regenerative discharge unit is required regardless of load capacity.

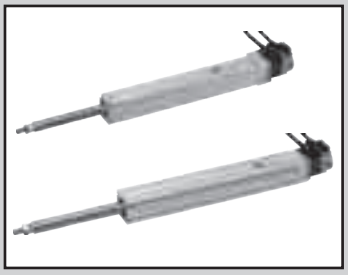

Electric actuator

KBX Series rod

- Drive method, ball screw
- Applicable motors: 50 W, 100 W

Specifications

[Size: T3D, T4D, motor 50 W]

Descriptions			KBX-T3D	KBX-T4D
Drive method			Rolled ball screw, outer diameter: 8 mm	
Motor			50 W AC servo motor (absolute)	
Shape			Rod	
Thread lead		mm	12	
Stroke		mm	to 150	to 200
Max. speed		mm/s	600	
Max. load capacity	Horizontal	kg	4	7
	Vertical	kg	1.9	3.1
	Acceleration/deceleration time	s	0.3 or more	
Repeatability		mm	±0.02	
Static allowable moment of load		Nm	− (*1)	

*1: Static and dynamic load moment cannot be applied to a rod. Use in combination with linear guide to ensure that radial load is not applied to the rod.
* For use as a vertical axis, select the type with brake.
* Acceleration/deceleration time is the time it takes to reach the speed specified in the programming.

[Size: T5E, motor 100 W]

Descriptions			KBX-T5E	
Drive method			Rolled ball screw, outer diameter: 12 mm	
Motor			100 W AC servo motor (absolute)	
Shape			Rod	
Thread lead		mm	12	
Stroke		mm	to 250	300
Max. speed		mm/s	600	470
Max. load capacity	Horizontal	kg	25	
	Vertical	kg	6.5	
	Acceleration/deceleration time	s	0.3 or more	
Repeatability		mm	±0.02 or more	
Static allowable moment of load		Nm	− (*1)	

*1: Static and dynamic load moment cannot be applied to a rod. Use in combination with linear guide to ensure that radial load is not applied to the rod.
* For use as a vertical axis, select the type with brake.
* Acceleration/deceleration time is the time it takes to reach the speed specified in the programming.

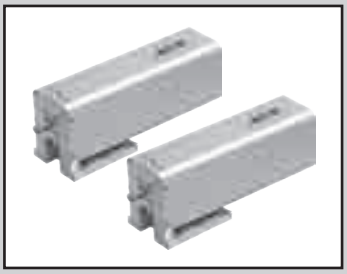

Electric actuator

KBX Series R-axis

- Drive method: harmonic drive, planet gear
- Applicable motors: 50 W

Specifications

Model

Descriptions	KBX-00D-RH	KBX-00D-RP
Motor	50 W AC servo motor (absolute)	50 W AC servo motor (absolute)
Deceleration method	Harmonic drive	Planet gear
Reduction ratio	1/50	1/21
Rotation range °	360	
Max. speed °/s	360	857
Max. load capacity kg	10	
Acceleration/deceleration time s	0.3 or more	
Rated output torque N·m	5.4	3.1
Allowable load inertia $kg·m^2$	0.0485	0.0125
Output axis allowable thrust load N	98	
Output axis allowable radial load N	196	
Output axis allowable moment N·m	1.3	
Repeatability °	±0.025	±0.125

* Max. load capacity applies when only thrust load is applied to the output axis in the vertical position.
* Acceleration/deceleration time is the time it takes to reach the speed specified in the programming.

How to order axes (slider, rod)

KBX - 30 E - S T - M 20 N - 45

- KBX: Model No.
- 30: Ⓐ Body size
- E: Ⓑ Motor capacity
- S: Ⓒ Drive method
- T: Ⓓ Motor mount
- M: Ⓔ Shape
- 20: Ⓕ Lead
- N: Ⓖ Brake
- 45: Ⓗ Stroke

Code	Content
Ⓐ Body size (mm)	
T3	Width 35 × height 38.5
T4	Width 45 × height 45
T5	Width 45 (55) × height 45 (55) ( ) is the body size of rod
T7	Width 64 × height 60
10	Width 78 × height 75
30	Width 130 × height 89.8
50	Width 160 × height 110
60	Width 214 × height 140

Refer to the applicable dimensions for details.

Ⓑ Motor capacity (Refer to the following Table 1)	
D	50 W
E	100 W
F	200 W
G	400 W
J	750 W

Ⓒ Drive method (Refer to the following Table 1)	
S	Ball screw
U	(Refer to Table 1 *1)
B	Timing belt

Ⓓ Motor mount (Refer to the following Table 1)	
T	Straight axis (BS) / top (Belt)
R	Right (BS) / (Belt)
L	Left (BS) / (Belt)
U	Bottom (BS) / (Belt)

Ⓔ Shape (Refer to the following Table 2)	
S	Short slider
M	Medium slider
L	Long slider
C	Rod

Refer to Table 3 below.

Ⓕ Lead		
05	5 mm	(Ball screw drive)
06	6 mm	
10	10 m	
12	12 mm	
20	20 mm	
40	40 mm	
50	50 mm	
19	19.555 mm or equiv.	(Timing belt drive)
21	21 mm or equiv.	
42	42 mm or equiv.	

Ⓖ Brake	
N	None
B	Available *1

Ⓗ Stroke (Refer to the following Tables 4 and 5)	
05 to X45	50 mm to 4450 mm (50 mm Pitch) (Refer to the applicable dimensions for details on stroke codes.)

*1: Cannot be selected when Ⓒ drive method is B (timing belt).

[Example of model No.]

KBX-30E-ST-M20N-45

Ⓐ Body size	: Width 130 × height 89.8 mm
Ⓑ Motor size	: 100 W
Ⓒ Drive method	: Ball screw
Ⓓ Motor mount	: Axis straight
Ⓔ Shape	: Medium slider
Ⓕ Lead	: 20 mm
Ⓖ Brake	: None
Ⓗ Stroke	: 450 mm

How to order axes (R-axis)

KBX - 00D - RH - A

- KBX: Model No. KBX
- RH: Ⓐ Deceleration method
- A: Ⓑ Mounting method

Code	Content
Ⓐ Deceleration method	
RH	Harmonic
RP	Planet gear

Ⓑ Mounting method	
A	With L bracket
F	Flange

Table 1 (A) body size, (B) motor size, and (C) drive method

(A) Body size	(B) Motor capacity					(C) Drive method *1			(D) Motor mount			
	D	E	F	G	J	S	U	B	T	R	L	U
	50 W	100 W	200 W	400 W	750 W	Ball screw		Belt	Straight/ top	Right	Left	Bottom
KBX-T3	○	-	-	-	-	○	-	-	○	-	-	-
KBX-T4	○	-	-	-	-	○	-	-	○	-	-	-
KBX-T5	○	○*5	-	-	-	○	-	-	○	-	-	-
KBX-T7	○	-	-	-	-	○	-	-	○	-	-	-
KBX-10	-	○	○*2	-	-	○	○	○	○	○	○	○
KBX-30	-	○	○	-	-	○	○	○	○	○	○	○
KBX-50	-	-	○	○	-	○	○	○	○	○*4	○*4	○*4
KBX-60	-	-	-	○*3	○	○	○	○	○	-	-	-

*1: If (D) is direct mounting (T), select "S" combination when the (C) drive method is ball screw. Example: ST
If (D) is not "T", select "U" when the (C) drive method is ball screw. Examples: UR, UU
*2: If (C) drive method is belt drive, 100 W (E) or 200 W (F) can be selected. If it is ball screw, only 100 W (E) can be selected.
*3: If the KBX-60 drive method is belt drive, there is no (B) motor size setting for 400 W. Only 750 W is available.
*4: If the belt type's lead is 19.555 or equivalent, it cannot be selected. (Only "T" setting is available)
*5: For slider type, only "D" (50 W) can be selected. For rod type, only "E" (100 W) can be selected.

Table 2 (A) body size and (E) shape

(A) Body size	(E) Shape			
	S	M	L	C
	Short slider	Medium slider	Long slider	Rod
KBX-T3	-	-	-	○
KBX-T4	-	-	-	○
KBX-T5	-	○	-	○
KBX-T7	-	○	-	-
KBX-10	○	○	-	-
KBX-30	-	○	○	-
KBX-50	-	○*1	○	-
KBX-60	-	○	○	-

*1: If the lead for KBX-50G-BT is 19.555 or equivalent, it cannot be selected. (It is available only with KBX-50G-BT-L19N-[st])

Table 3 (B) motor size, (C) drive method, and (F) lead

(A) Body size	(B) Motor capacity		(F) Lead								
			(C) Drive method, ball screw						(C) Drive method: belt		
	W	Code	5	6	10	12	20	50	19.555	21	42
KBX-T3	50 W	D	-	-	-	○	-	-	-	-	-
KBX-T4	50 W	D	-	-	-	○	-	-	-	-	-
KBX-T5	50 W	D*1	-	○	-	○	-	-	-	-	-
	100 W	E*1	-	-	-	○	-	-	-	-	-
KBX-T7	50 W	D	-	○	-	○	-	-	-	-	-
KBX-10	100 W	E	○	-	○	-	○	-	-	○	-
	200 W	F	-	-	-	-	-	-	-	○	○
KBX-30	100 W	E	○	-	○	-	○	-	-	○	-
	200 W	F	○	-	○	-	○	-	-	○	○
KBX-50	200 W	F	○	-	○	-	○	-	-	○	-
	400 W	G	○	-	○	-	○	-	○	-	○
KBX-60	400 W	G	-	-	○	-	○	-	-	-	-
	750 W	J	-	-	○	-	○	○	○	-	-

*1: For KBX-T5 slider type, only "D" (50 W) can be selected. For rod type, only "E" (100 W) can be selected.

Table 4 [Drive method: ball screw] (A) body size, (B) motor size, and (C) stroke

(A) Body size	(B) Motor capacity		Stroke pitch	Stroke (mm)			
	W	Code		Short slider Min. to max.	Medium slider Min. to max.	Long slider Min. to max.	Rod Min. to max.
KBX-T3	50 W	D	50	- -	- -	- -	50 to 150
KBX-T4	50 W	D	50	- -	- -	- -	50 to 200
KBX-T5	50 W	D	50	- -	50 to 500	- -	- -
	100 W	E	50	- -	- -	- -	50 to 300
KBX-T7	50 W	D	50	- -	50 to 700	- -	- -
KBX-10	100 W	E	100	150 (*4) to 1250 (*3)	100 (*4) to 1200 (*3)	- -	- -
KBX-30	100 W	E-Straight (*2)	100	- -	150 to 1250 (*3)	150 to 1250 (*3)	- -
		E-wrap (*2)	100	- -	100 to 1200 (*3)	150 to 1250 (*3)	- -
	200 W	F	100	- -	100 to 1200 (*3)	150 to 1150 (*3)	- -
KBX-50	200 W	F	100	- -	200 to 1600	250 to 1550	- -
	400 W	G	100	- -	200 to 1600	250 to 1550	- -
KBX-60	400 W	G	100	- -	200 to 1500	150 to 1450	- -
	750 W	J	100	- -	200 to 1700	150 to 1650	- -

*1: For how to order, refer to the stroke code of the respective dimensions.
*2: Max. and min. stroke differ depending on the motor mounting direction.
*3: The max. stroke for lead 5 is 200 mm less than the value in the table. (Ex: the max. stroke for KBX-10E-ST-M05 is 1,000 mm)
*4: The min. stroke for KBX-10E-UU is 250 mm with short slider and 200 mm with medium slider.

Table 5 [Drive method: timing belt] (A) body size, (B) motor size, and (C) stroke

(A) Body size	(B) Motor capacity		Stroke pitch	Stroke (mm)		
	W	Code		Short slider Min. to max.	Medium slider Min. to max.	Long slider Min. to max.
KBX-10	100 W	E	100	150 to 2550	100 to 2500	- -
	200 W	F	100	150 to 2550	100 to 2500	- -
KBX-30	100 W	E	100	- -	100 to 3200	150 to 3150
	200 W	F	100	- -	100 to 3200	150 to 3150
KBX-50	200 W	F	100	- -	200 to 3500	250 to 3450
	400 W	G (Lead:42)	100	- -	200 to 3500	250 to 3450
		G (Lead:19)	100	- -	- -	150 to 4450
KBX-60	750 W	J	100	- -	150 to 4450	150 to 4350

*1: For how to order, refer to the stroke table of the respective dimensions.
*2: For KBX-50G, stroke varies depending on the lead.
Note: There is no belt drive setting for the drive methods of KBX-T3 to T7 (50 W).

Table 6 Compatible controller and cable combinations

(B) Motor capacity		Master (Scanner) unit	Slave (Adapter) unit	Controller cable	I/O cable
D	50 W	KCA-25-M10-□	KCA-25-S10-□	KBX-10-CC-M□	KCA-10-IC-A□
E	100 W				
F	200 W				
G	400 W	KCA-25-M40-□	KCA-25-S40-□		
J	750 W	KCA-25-M80-□	KCA-25-S80-□		

Refer to page 171 for controller model No.

Table 7 Optional products for single axis

Part name	Model No.	Summary	Page
Regenerative discharge unit	KCA-ABSU-2000	Servo motor capacity (for 50, 100, and 200 W)	194
	KCA-ABSU-4000	Servo motor capacity (for 400 W)	
	KCA-ABSU-8000	Servo motor capacity (for 750 W)	
Origin change sensor	KBA-HBS-BA10	For ball screw drive axis, cable length: approx. 2,150 mm	169
	KBA-HBS-BA20	Cable for belt axis drive axis length: approx. 1,950 mm	
	KBA-HBS-BA20L	Cable for belt axis drive axis length: approx. 3,200 mm	
Handy terminal	KCA-TPH-4C	Compatible with KCA-25 version 2.26 and up.	197
PC software	KCA-SF-98D	The final character "D" indicates the version.	199
Communication cable	KCA-PCBL-31	RS-232C connection cable to connect the PC to the controller	200
Link cable	KCA-10-LC-A[*1]	*1: Cable length 01:150 mm, 03:300 mm, 10:1000 mm	197
Encoder battery	KCA-25-EB-05	A backup lithium battery for the encoder	201

MEMO

Dimensions

● KBX-T5D-ST-M

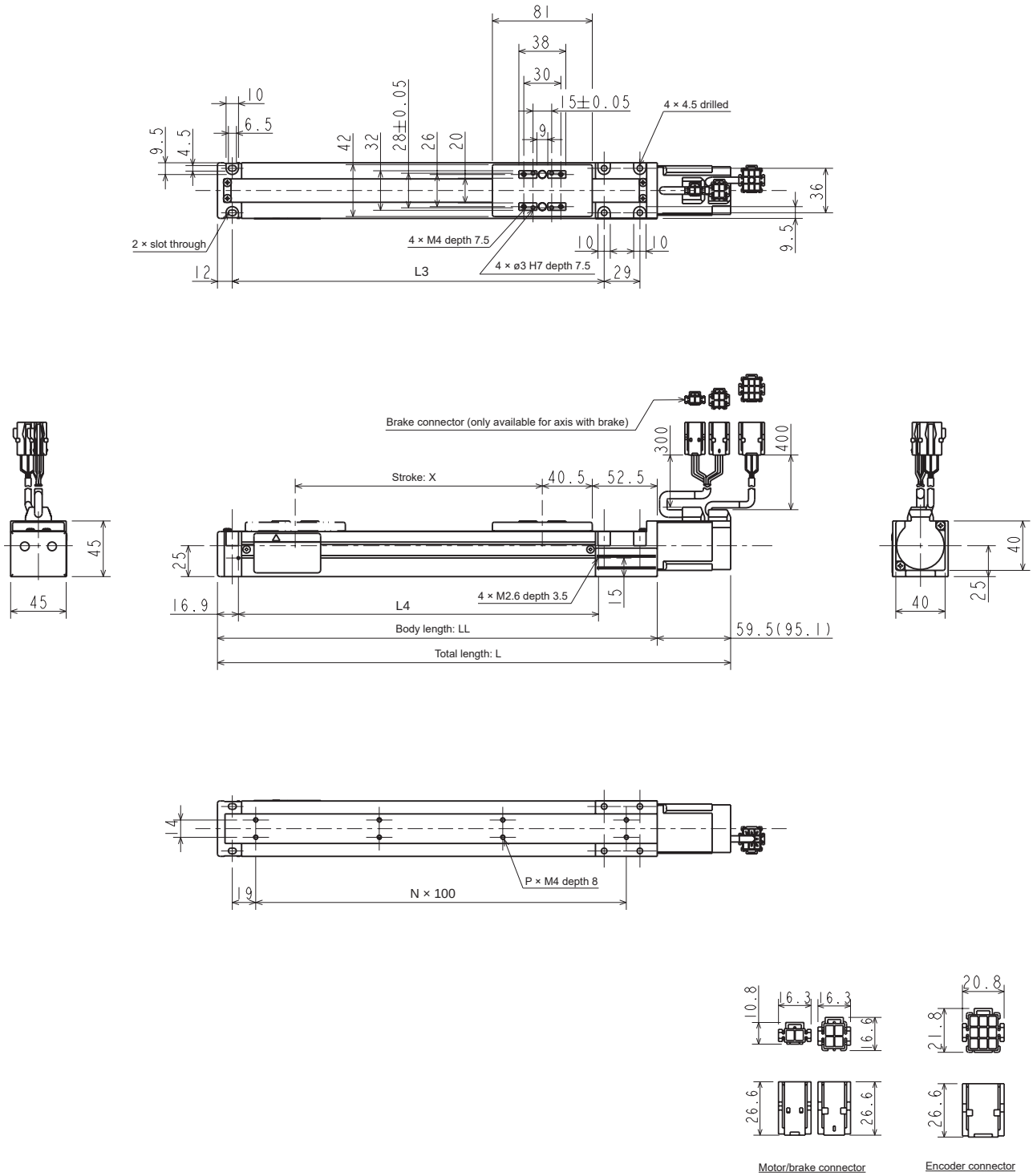

Stroke X (mm)	50	100	150	200	250	300	350	400	450	500
Stroke code	05	10	15	20	25	30	35	40	45	50
Total length L (mm)	265.5 (301.1)	315.5 (351.1)	365.5 (401.1)	415.5 (451.1)	465.5 (501.1)	515.5 (551.1)	565.5 (601.1)	615.5 (651.1)	665.5 (701.1)	715.5 (751.1)
Body length LL (mm)	206	256	306	356	406	456	506	556	606	656
L3 (mm)	151	201	251	301	351	401	451	501	551	601
L4 (mm)	141.6	191.6	241.6	291.6	341.6	391.6	441.6	491.6	541.6	591.6
Number of mounting holes P	4	6	6	8	8	10	10	12	12	14
Number of mounting hole intervals N	1	2	2	3	3	4	4	5	5	6
Body weight (kg)	1.2 (1.4)	1.3 (1.5)	1.4 (1.6)	1.5 (1.7)	1.6 (1.8)	1.7 (1.9)	1.8 (2.0)	1.9 (2.1)	2.0 (2.2)	2.1 (2.3)

* The value in ( ) is for axis with brake

Dimensions

● KBX-T7D-ST-M

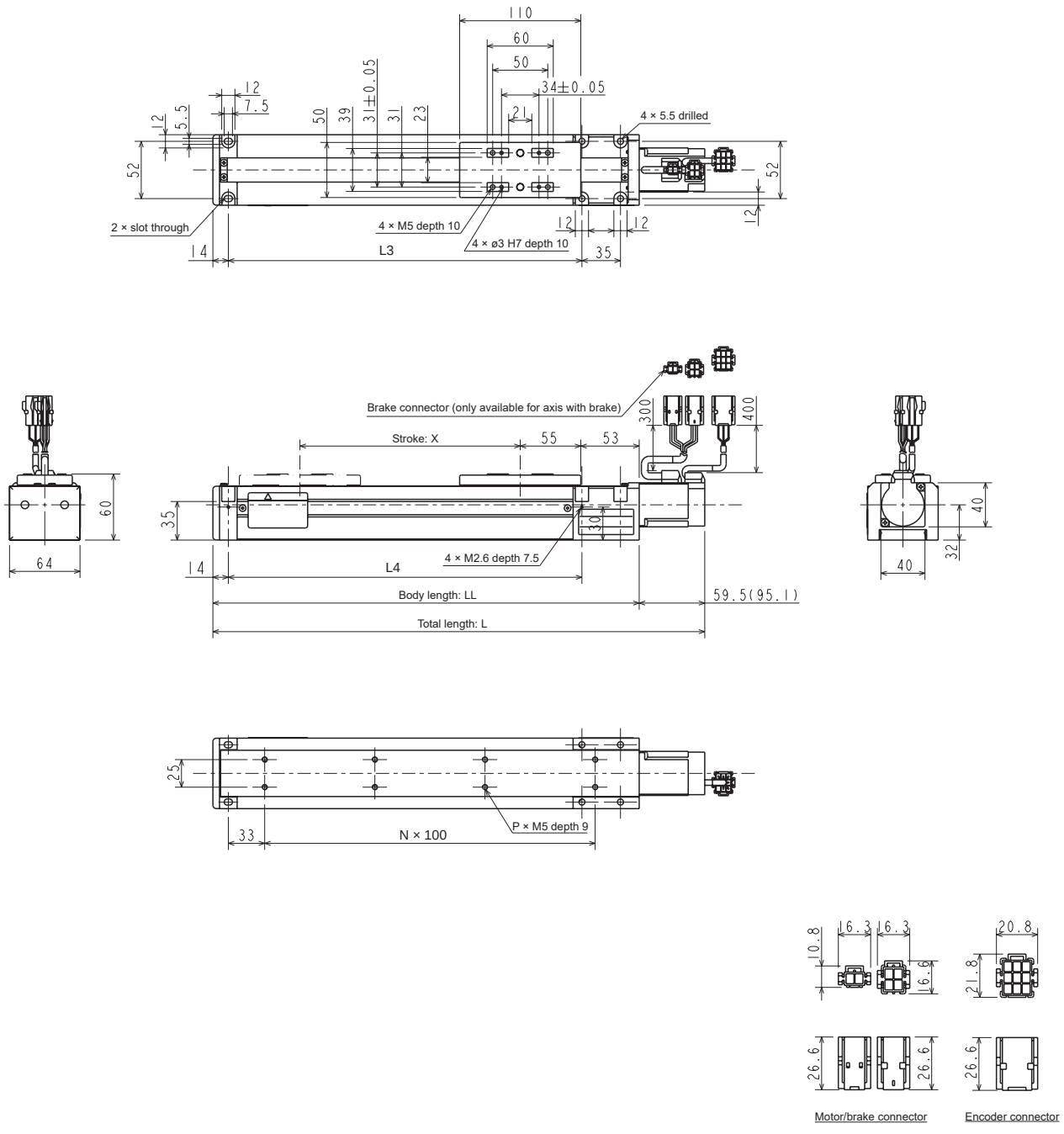

Stroke X (mm)	50	100	150	200	250	300	350	400	450	500	550	600	700
Stroke code	05	10	15	20	25	30	35	40	45	50	55	60	70
Total length L (mm)	296.5 (332.1)	346.5 (382.1)	396.5 (432.1)	446.5 (482.1)	496.5 (532.1)	546.5 (582.1)	596.5 (632.1)	646.5 (682.1)	696.5 (732.1)	746.5 (782.1)	796.5 (832.1)	846.5 (882.1)	946.5 (982.1)
Body length LL (mm)	237	287	337	387	437	487	537	587	637	687	737	787	887
L3 (mm)	171	221	271	321	371	421	471	521	571	621	671	721	821
L4 (mm)	171	221	271	321	371	421	471	521	571	621	671	721	821
Number of mounting holes P	4	6	6	8	8	10	10	12	12	14	14	16	18
Number of mounting hole intervals N	1	2	2	3	3	4	4	5	5	6	6	7	8
Body weight (kg)	2.3 (2.5)	2.5 (2.7)	2.7 (2.9)	2.9 (3.1)	3.1 (3.3)	3.3 (3.5)	3.5 (3.7)	3.7 (3.9)	3.9 (4.1)	4.1 (4.3)	4.3 (4.5)	4.5 (4.7)	4.9 (5.1)

* The value in ( ) is for axis with brake

Dimensions

● KBX-10E-ST-$^{S}_{M}$

(Straight motor axis, short slider/medium slider, motor capacity 100 W)

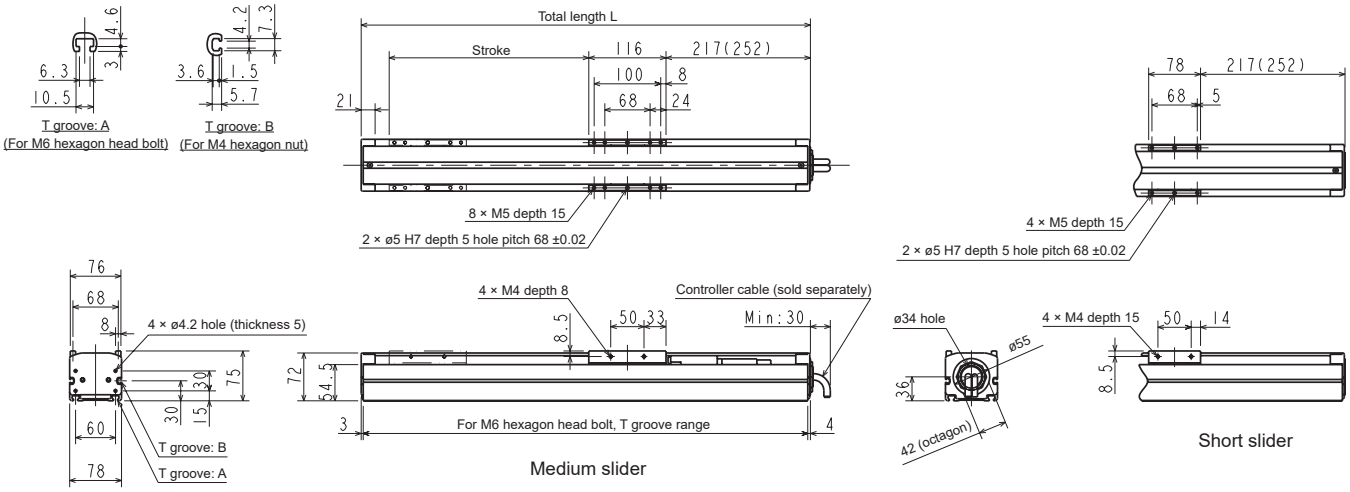

● Short slider

Stroke (mm)	150	250	350	450	550	650	750	850	950	1050	1150	1250
Stroke code	15	25	35	45	55	65	75	85	95	A5	B5	C5
Total length L (mm)	475 (510)	575 (610)	675 (710)	775 (810)	875 (910)	975 (1010)	1075 (1110)	1175 (1210)	1275 (1310)	1375 (1410)	1475 (1510)	1575 (1610)
Body weight (kg)	4.5 (4.8)	5.2 (5.5)	5.9 (6.2)	6.6 (6.9)	7.3 (7.6)	8.0 (8.3)	8.7 (9.0)	9.4 (9.7)	10.1 (10.4)	10.8 (11.1)	11.5 (11.8)	12.2 (12.5)

● Medium slider

Stroke (mm)	100	200	300	400	500	600	700	800	900	1000	1100	1200
Stroke code	10	20	30	40	50	60	70	80	90	A0	B0	C0
Total length L (mm)	475 (510)	575 (610)	675 (710)	775 (810)	875 (910)	975 (1010)	1075 (1110)	1175 (1210)	1275 (1310)	1375 (1410)	1475 (1510)	1575 (1610)
Body weight (kg)	4.8 (5.1)	5.5 (5.8)	6.2 (6.5)	6.9 (7.2)	7.6 (7.9)	8.3 (8.6)	9.0 (9.3)	9.7 (10.0)	10.4 (10.7)	11.1 (11.4)	11.8 (12.1)	12.5 (12.8)

* The value in ( ) is for axis with brake

● KBX-10E-UR-$^{S}_{M}$

(Right mounted motor, short slider/medium slider, motor capacity 100 W)

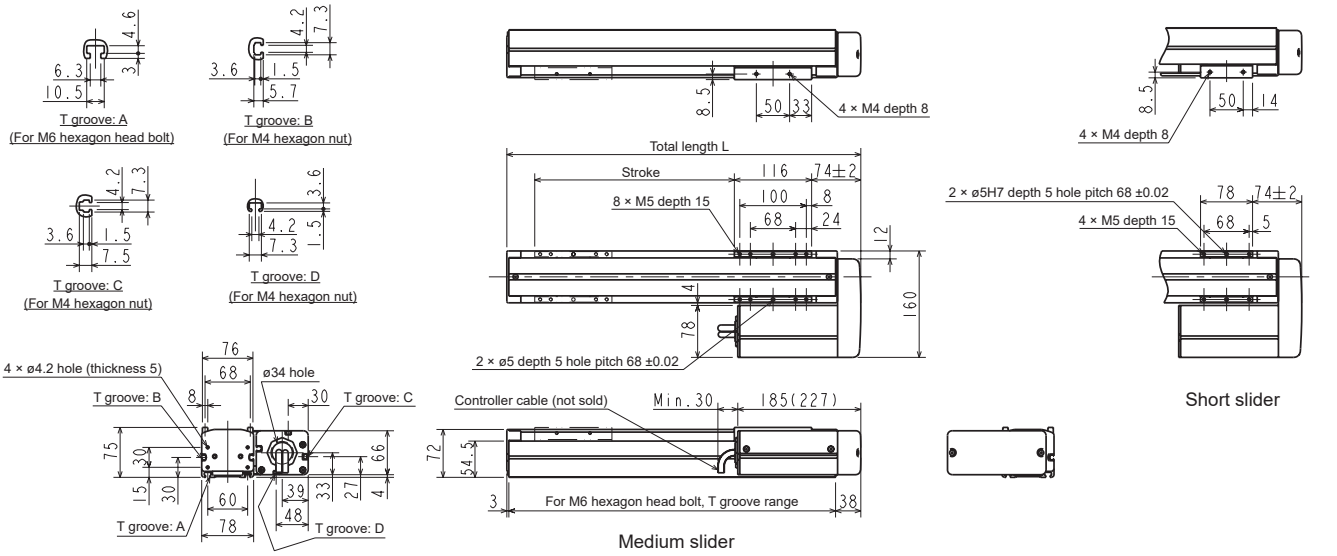

● Short slider

Stroke (mm)	150	250	350	450	550	650	750	850	950	1050	1150	1250
Stroke code	15	25	35	45	55	65	75	85	95	A5	B5	C5
Total length L (mm)	332	432	532	632	732	832	932	1032	1132	1232	1332	1432
Body weight (kg)	4.7 (5.0)	5.4 (5.7)	6.1 (6.4)	6.8 (7.1)	7.5 (7.8)	8.2 (8.5)	8.9 (9.2)	9.6 (9.9)	10.3 (10.6)	11.0 (11.3)	11.7 (12.0)	12.4 (12.7)

● Medium slider

Stroke (mm)	100	200	300	400	500	600	700	800	900	1000	1100	1200
Stroke code	10	20	30	40	50	60	70	80	90	A0	B0	C0
Total length L (mm)	332	432	532	632	732	832	932	1032	1132	1232	1332	1432
Body weight (kg)	5.0 (5.3)	5.7 (6.0)	6.4 (6.7)	7.1 (7.4)	7.8 (8.1)	8.5 (8.8)	9.2 (9.5)	9.9 (10.2)	10.6 (10.9)	11.3 (11.6)	12.0 (12.3)	12.7 (13.0)

*1: The value in ( ) is for axis with brake

Dimensions

● KBX-10E-UL-$^{S}_{M}$

(Left mounted motor, short slider/medium slider, motor capacity 100 W)

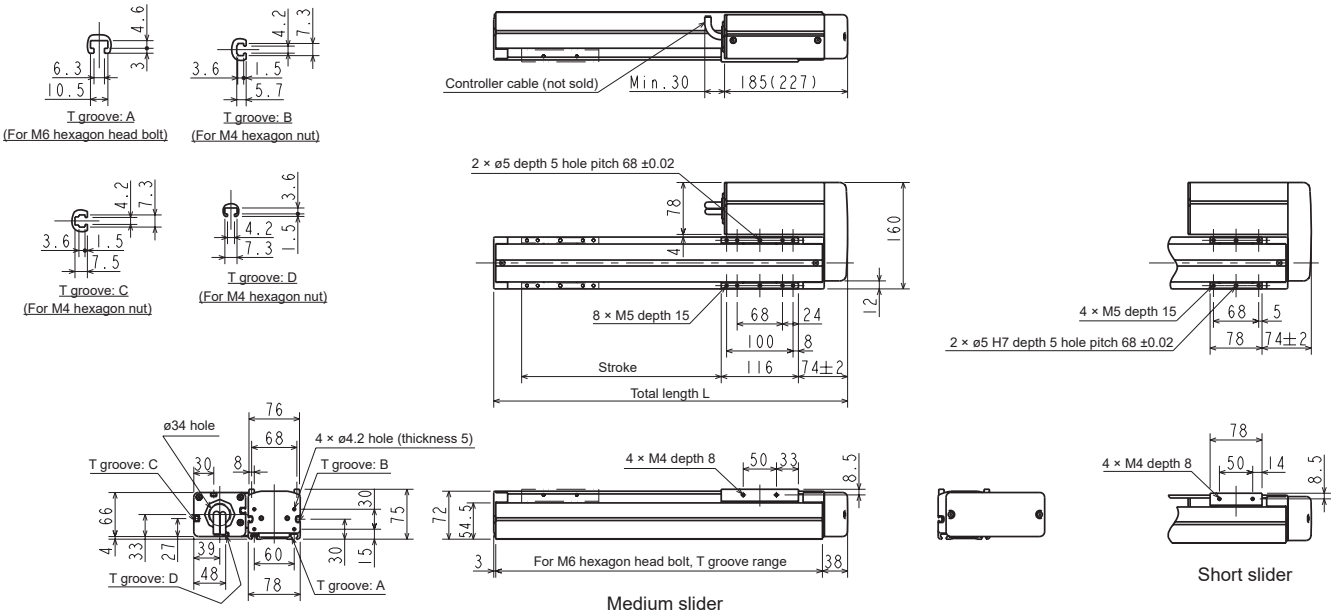

● KBX-10E-UU-$^{S}_{M}$

(Bottom mounted motor, short slider/medium slider, motor capacity 100 W)

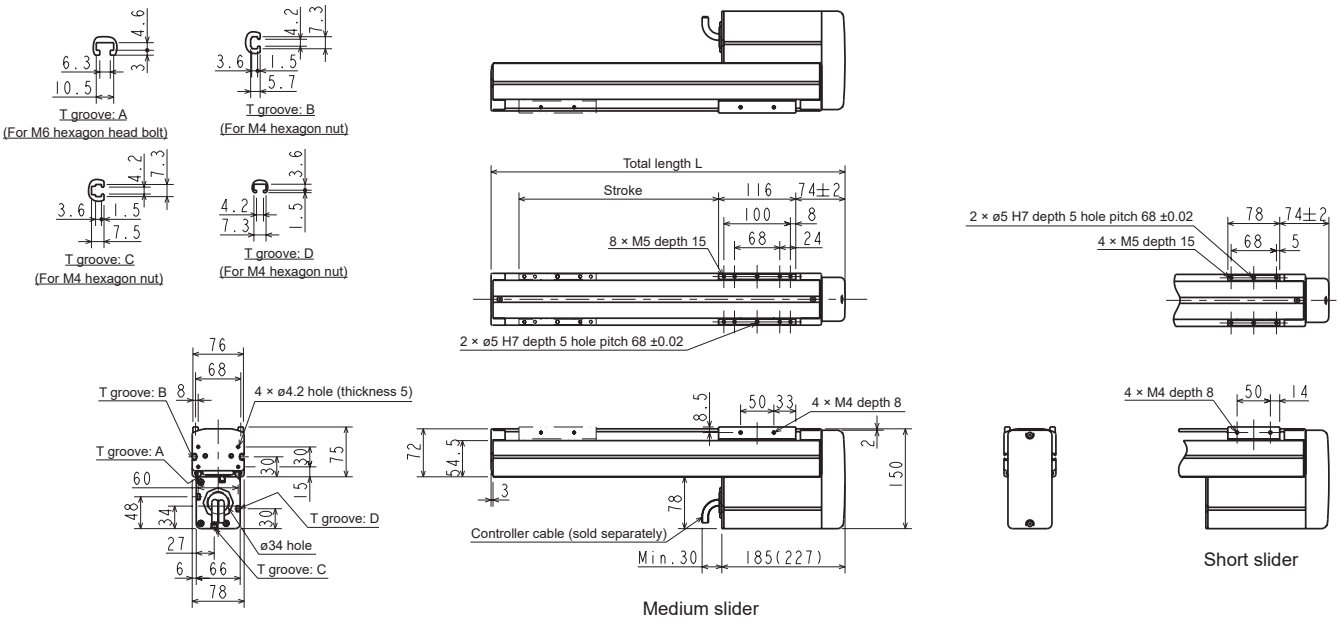

● Short slider

Stroke (mm)	150	250	350	450	550	650	750	850	950	1050	1150	1250
Stroke code	15	25	35	45	55	65	75	85	95	A5	B5	C5
Total length L (mm)	332	432	532	632	732	832	932	1032	1132	1232	1332	1432
Body weight (kg)	4.7 (5.0)	5.4 (5.7)	6.1 (6.4)	6.8 (7.1)	7.5 (7.8)	8.2 (8.5)	8.9 (9.2)	9.6 (9.9)	10.3 (10.6)	11.0 (11.3)	11.7 (12.0)	12.4 (12.7)

● Medium slider

Stroke (mm)	100	200	300	400	500	600	700	800	900	1000	1100	1200
Stroke code	10	20	30	40	50	60	70	80	90	A0	B0	C0
Total length L (mm)	332	432	532	632	732	832	932	1032	1132	1232	1332	1432
Body weight (kg)	5.0 (5.3)	5.7 (6.0)	6.4 (6.7)	7.1 (7.4)	7.8 (8.1)	8.5 (8.8)	9.2 (9.5)	9.9 (10.2)	10.6 (10.9)	11.3 (11.6)	12.0 (12.3)	12.7 (13.0)

*1: The value in ( ) is for axis with brake
*2: The min. stroke for KBX-10E-UU (motor down wrap) is 250 mm with short slider and 200 mm with medium slider.

Dimensions

● KBX-30E-ST-$^{M}_{L}$

(Straight motor axis, medium slider/long slider, motor capacity 100 W)

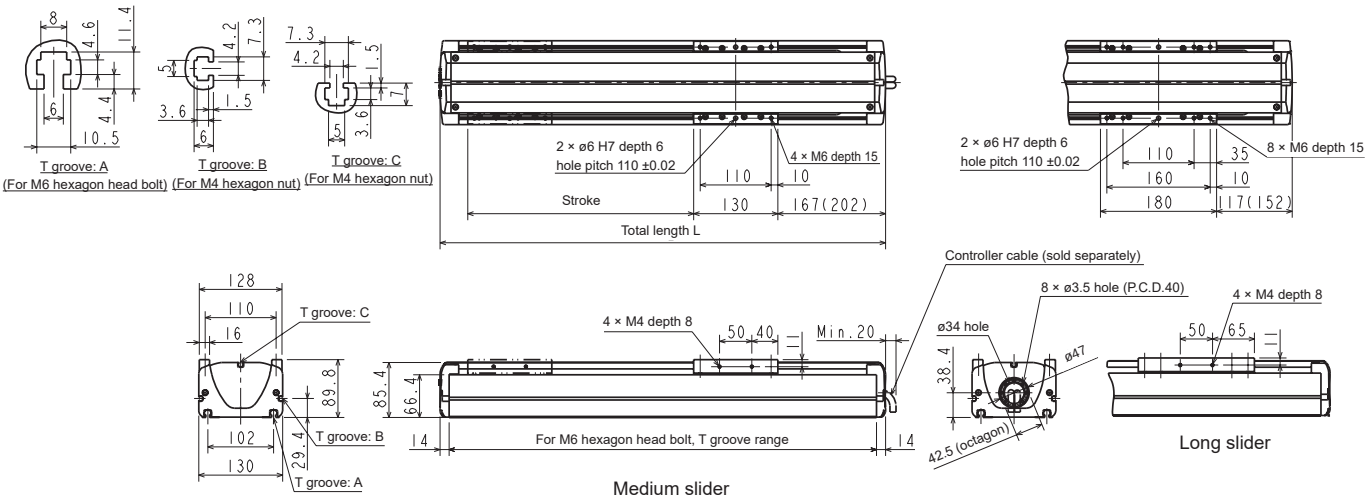

● Medium slider

Stroke (mm)	150	250	350	450	550	650	750	850	950	1050	1150	1250
Stroke code	15	25	35	45	55	65	75	85	95	A5	B5	C5
Total length L (mm)	490 (525)	590 (625)	690 (725)	790 (825)	890 (925)	990 (1025)	1090 (1125)	1190 (1225)	1290 (1325)	1390 (1425)	1490 (1525)	1590 (1625)
Body weight (kg)	8.1 (8.6)	9.3 (9.8)	10.5 (11.0)	11.7 (12.2)	12.9 (13.4)	14.1 (14.6)	15.3 (15.8)	16.5 (17.0)	17.7 (18.2)	18.9 (19.4)	20.1 (20.6)	21.3 (21.8)

● Long slider

Stroke (mm)	150	250	350	450	550	650	750	850	950	1050	1150	1250
Stroke code	15	25	35	45	55	65	75	85	95	A5	B5	C5
Total length L (mm)	490 (525)	590 (625)	690 (725)	790 (825)	890 (925)	990 (1025)	1090 (1125)	1190 (1225)	1290 (1325)	1390 (1425)	1490 (1525)	1590 (1625)
Body weight (kg)	8.4 (8.9)	9.6 (10.1)	10.8 (11.3)	12.0 (12.5)	13.2 (13.7)	14.4 (14.9)	15.6 (16.1)	16.8 (17.3)	18.0 (18.5)	19.2 (19.7)	20.4 (20.9)	21.6 (22.1)

* The value in ( ) is for axis with brake

● KBX-30E-UR-$^{M}_{L}$

(Right mounted motor, medium slider/long slider, motor capacity 100 W)

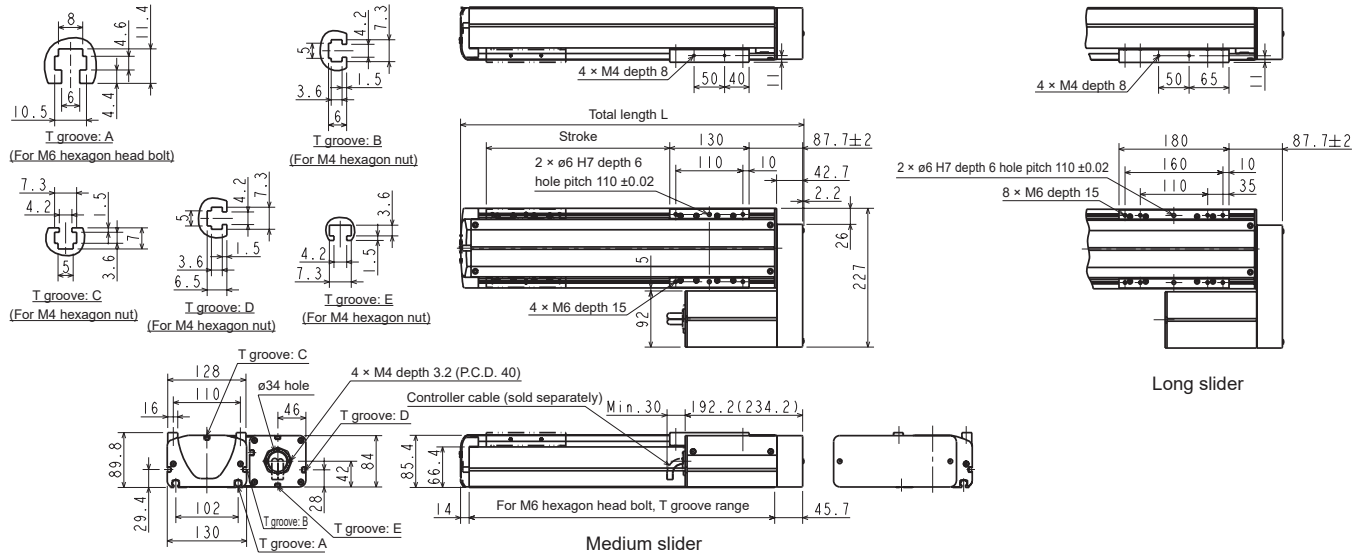

● Medium slider

Stroke (mm)	100	200	300	400	500	600	700	800	900	1000	1100	1200
Stroke code	10	20	30	40	50	60	70	80	90	A0	B0	C0
Total length L (mm)	361.9	461.9	561.9	661.9	761.9	861.9	961.9	1061.9	1161.9	1261.9	1361.9	1461.9
Body weight (kg)	7.8 (8.1)	9.0 (9.3)	10.2 (10.5)	11.4 (11.7)	12.6 (12.9)	13.8 (14.1)	15.0 (15.3)	16.2 (16.5)	17.4 (17.7)	18.6 (18.9)	19.8 (20.1)	21.0 (21.3)

● Long slider

Stroke (mm)	150	250	350	450	550	650	750	850	950	1050	1150
Stroke code	15	25	35	45	55	65	75	85	95	A5	B5
Total length L (mm)	461.9	561.9	661.9	761.9	861.9	961.9	1061.9	1161.9	1261.9	1361.9	1461.9
Body weight (kg)	9.3 (9.6)	10.5 (10.8)	11.7 (12.0)	12.9 (13.2)	14.1 (14.4)	15.3 (15.6)	16.5 (16.8)	17.7 (18.0)	18.9 (19.2)	20.1 (20.4)	21.3 (21.6)

*1: The value in ( ) is for axis with brake

Dimensions

● KBX-30E-UL-$^{M}_{L}$

(Left mounted motor, medium slider/long slider, motor capacity 100 W)

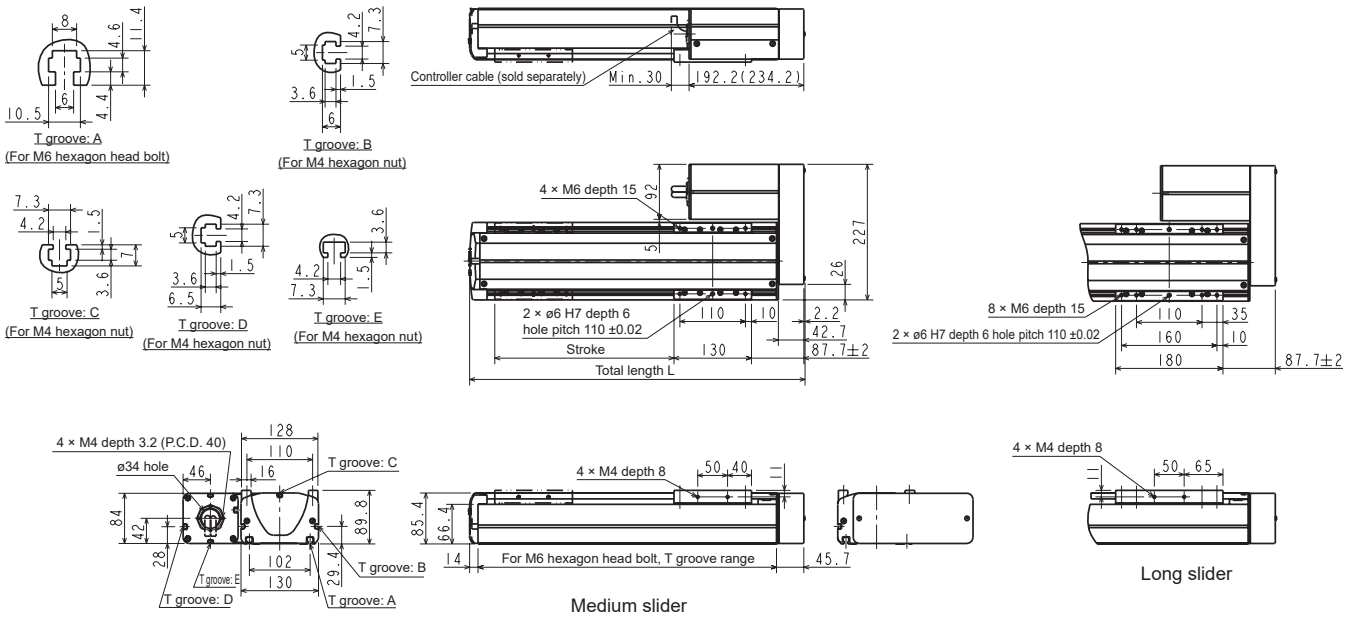

● KBX-30E-UU-$^{M}_{L}$

(Bottom mounted motor, medium slider/long slider, motor capacity 100 W)

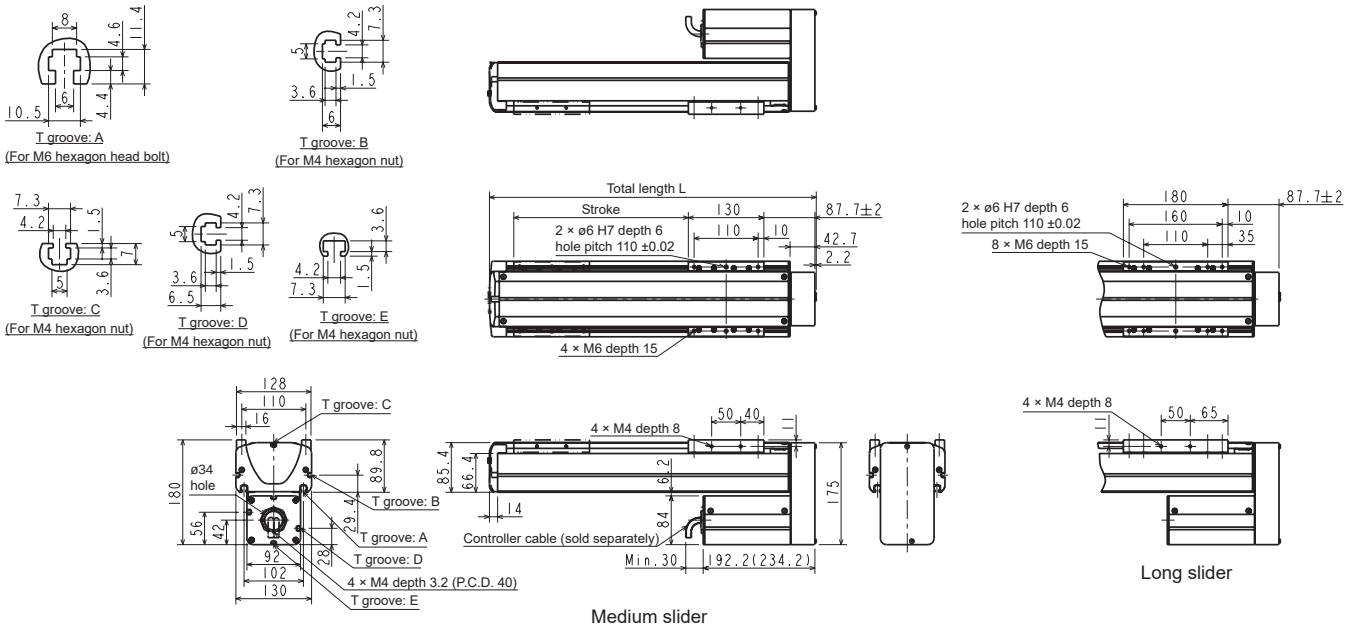

● Medium slider

Stroke (mm)	100	200	300	400	500	600	700	800	900	1000	1100	1200
Stroke code	10	20	30	40	50	60	70	80	90	A0	B0	C0
Total length L (mm)	361.9	461.9	561.9	661.9	761.9	861.9	961.9	1061.9	1161.9	1261.9	1361.9	1461.9
Body weight (kg)	7.8 (8.1)	9.0 (9.3)	10.2 (10.5)	11.4 (11.7)	12.6 (12.9)	13.8 (14.1)	15.0 (15.3)	16.2 (16.5)	17.4 (17.7)	18.6 (18.9)	19.8 (20.1)	21.0 (21.3)

● Long slider

Stroke (mm)	150	250	350	450	550	650	750	850	950	1050	1150
Stroke code	15	25	35	45	55	65	75	85	95	A5	B5
Total length L (mm)	461.9	561.9	661.9	761.9	861.9	961.9	1061.9	1161.9	1261.9	1361.9	1461.9
Body weight (kg)	9.3 (9.6)	10.5 (10.8)	11.7 (12.0)	12.9 (13.2)	14.1 (14.4)	15.3 (15.6)	16.5 (16.8)	17.7 (18.0)	18.9 (19.2)	20.1 (20.4)	21.3 (21.6)

*1: The value in ( ) is for axis with brake

Dimensions

● KBX-30F-ST-$^{M}_{L}$

(Straight motor axis, medium slider/long slider, motor capacity 200 W)

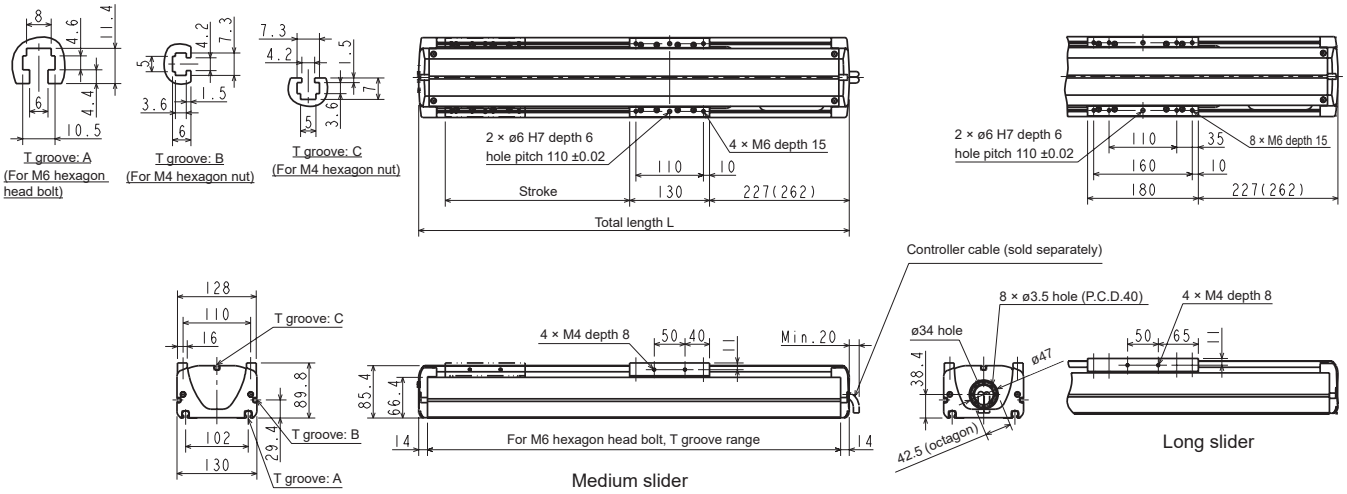

● Medium slider

Stroke (mm)	100	200	300	400	500	600	700	800	900	1000	1100	1200
Stroke code	10	20	30	40	50	60	70	80	90	A0	B0	C0
Total length L (mm)	500 (535)	600 (635)	700 (735)	800 (835)	900 (935)	1000 (1035)	1100 (1135)	1200 (1235)	1300 (1335)	1400 (1435)	1500 (1535)	1600 (1635)
Body weight (kg)	9.2 (9.8)	10.4 (11.0)	11.6 (12.2)	12.8 (13.4)	14.0 (14.6)	15.2 (15.8)	16.4 (17.0)	17.6 (18.2)	18.8 (19.4)	20.0 (20.6)	21.2 (21.8)	22.4 (23.0)

● Long slider

Stroke (mm)	150	250	350	450	550	650	750	850	950	1050	1150
Stroke code	15	25	35	45	55	65	75	85	95	A5	B5
Total length L (mm)	600 (635)	700 (735)	800 (835)	900 (935)	1000 (1035)	1100 (1135)	1200 (1235)	1300 (1335)	1400 (1435)	1500 (1535)	1600 (1635)
Body weight (kg)	10.7 (11.3)	11.9 (12.5)	13.1 (13.7)	14.3 (14.9)	15.5 (16.1)	16.7 (17.3)	17.9 (18.5)	19.1 (19.7)	20.3 (20.9)	21.5 (22.1)	22.7 (23.3)

* The value in ( ) is for axis with brake

● KBX-30F-UR-$^{M}_{L}$

(Right mounted motor, medium slider/long slider, motor capacity 200 W)

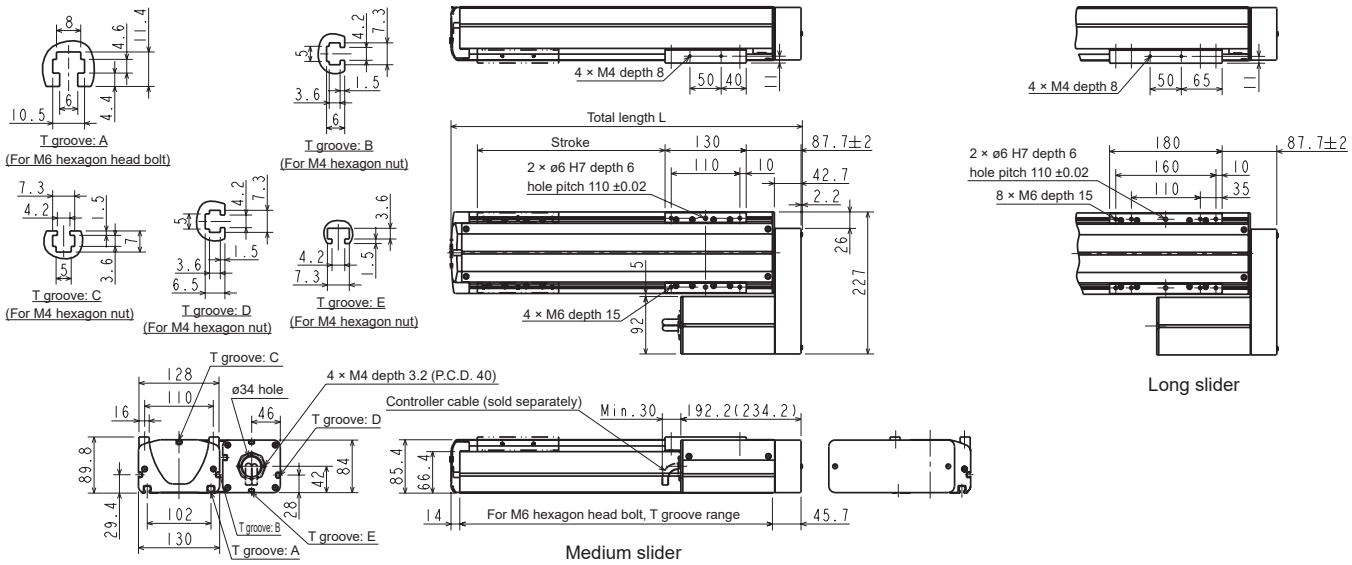

● Medium slider

Stroke (mm)	100	200	300	400	500	600	700	800	900	1000	1100	1200
Stroke code	10	20	30	40	50	60	70	80	90	A0	B0	C0
Total length L (mm)	361.9	461.9	561.9	661.9	761.9	861.9	961.9	1061.9	1161.9	1261.9	1361.9	1461.9
Body weight (kg)	8.3 (8.9)	9.5 (10.1)	10.7 (11.3)	11.9 (12.5)	13.1 (13.7)	14.3 (14.9)	15.5 (16.1)	16.7 (17.3)	17.9 (18.5)	19.1 (19.7)	20.3 (20.9)	21.5 (22.1)

● Long slider

Stroke (mm)	150	250	350	450	550	650	750	850	950	1050	1150
Stroke code	15	25	35	45	55	65	75	85	95	A5	B5
Total length L (mm)	461.9	561.9	661.9	761.9	861.9	961.9	1061.9	1161.9	1261.9	1361.9	1461.9
Body weight (kg)	9.8 (10.3)	11.0 (11.6)	12.2 (12.8)	13.4 (14.0)	14.6 (15.2)	15.8 (16.4)	17.0 (17.6)	18.2 (18.8)	19.4 (20.0)	20.6 (21.2)	21.8 (22.4)

*1: The value in ( ) is for axis with brake

Dimensions

● KBX-30F-UL-$^{M}_{L}$

(Left mounted motor, medium slider/long slider, motor capacity 200 W)

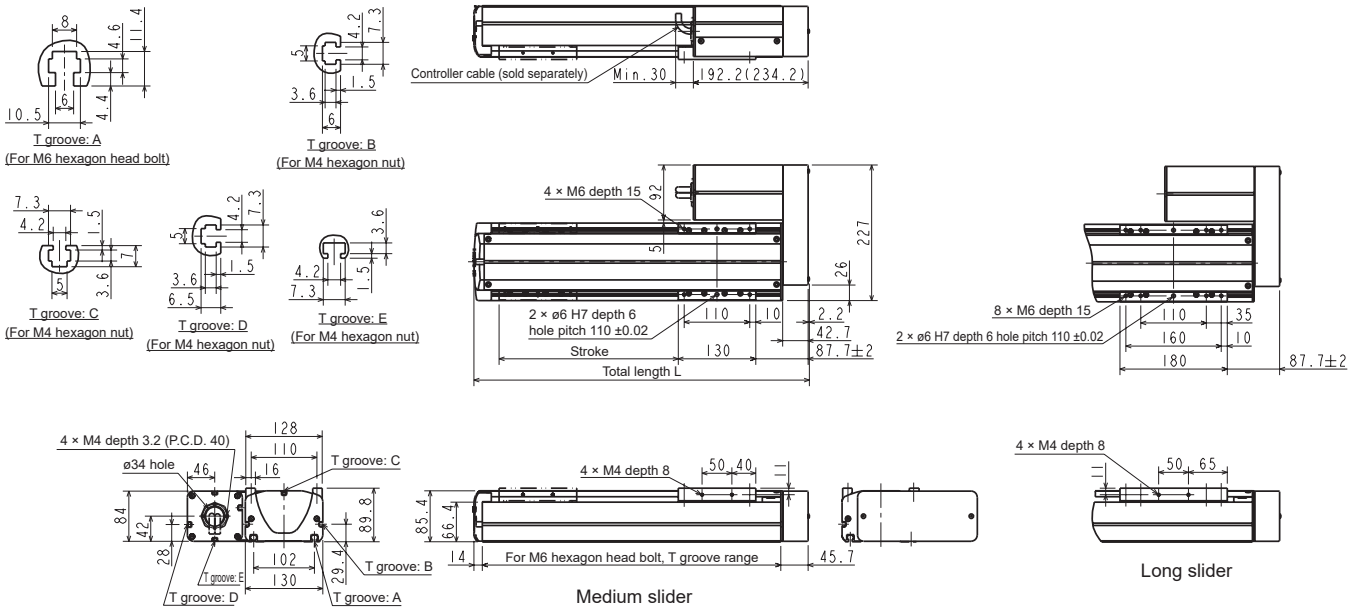

● KBX-30F-UU-$^{M}_{L}$

(Bottom mounted motor, medium slider/long slider, motor capacity 200 W)

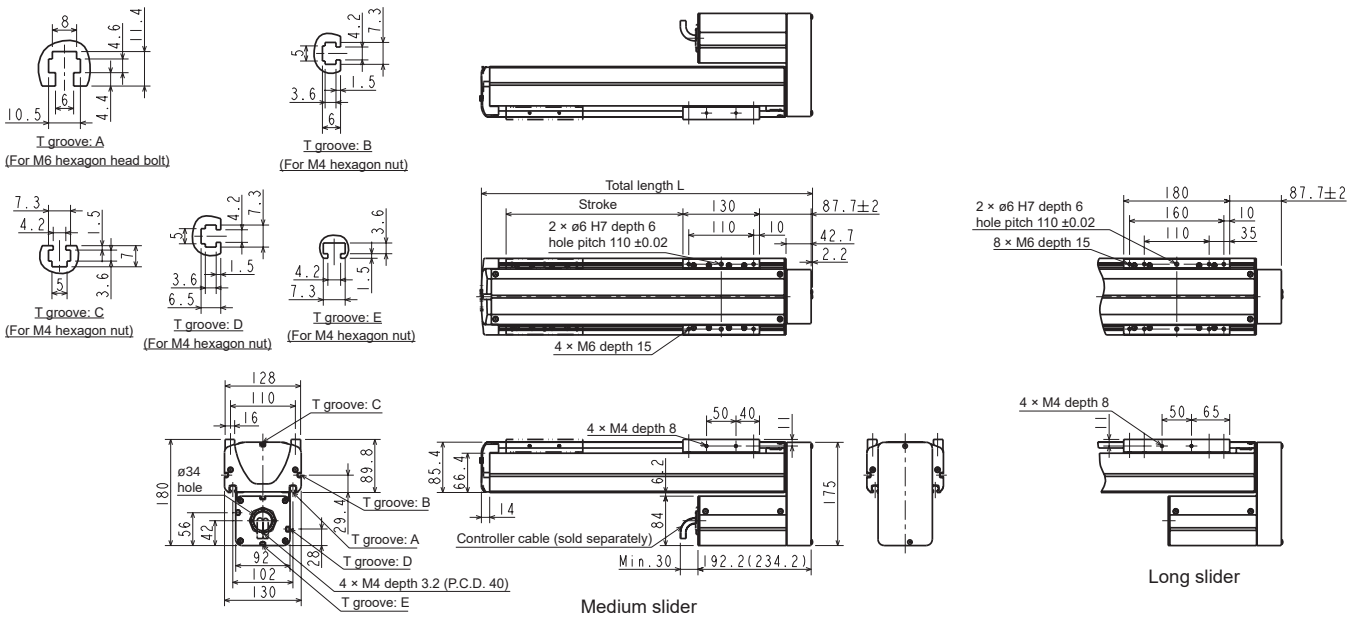

● Medium slider

Stroke (mm)	100	200	300	400	500	600	700	800	900	1000	1100	1200
Stroke code	10	20	30	40	50	60	70	80	90	A0	B0	C0
Total length L (mm)	361.9	461.9	561.9	661.9	761.9	861.9	961.9	1061.9	1161.9	1261.9	1361.9	1461.9
Body weight (kg)	8.3 (8.9)	9.5 (10.1)	10.7 (11.3)	11.9 (12.5)	13.1 (13.7)	14.3 (14.9)	15.5 (16.1)	16.7 (17.3)	17.9 (18.5)	19.1 (19.7)	20.3 (20.9)	21.5 (22.1)

● Long slider

Stroke (mm)	150	250	350	450	550	650	750	850	950	1050	1150
Stroke code	15	25	35	45	55	65	75	85	95	A5	B5
Total length L (mm)	461.9	561.9	661.9	761.9	861.9	961.9	1061.9	1161.9	1261.9	1361.9	1461.9
Body weight (kg)	9.8 (10.3)	11.0 (11.6)	12.2 (12.8)	13.4 (14.0)	14.6 (15.2)	15.8 (16.4)	17.0 (17.6)	18.2 (18.8)	19.4 (20.0)	20.6 (21.2)	21.8 (22.4)

*1: The value in ( ) is for axis with brake

Dimensions

● KBX-50F-ST-$^{M}_{L}$

(Straight motor axis, medium slider/long slider, motor capacity 200 W)

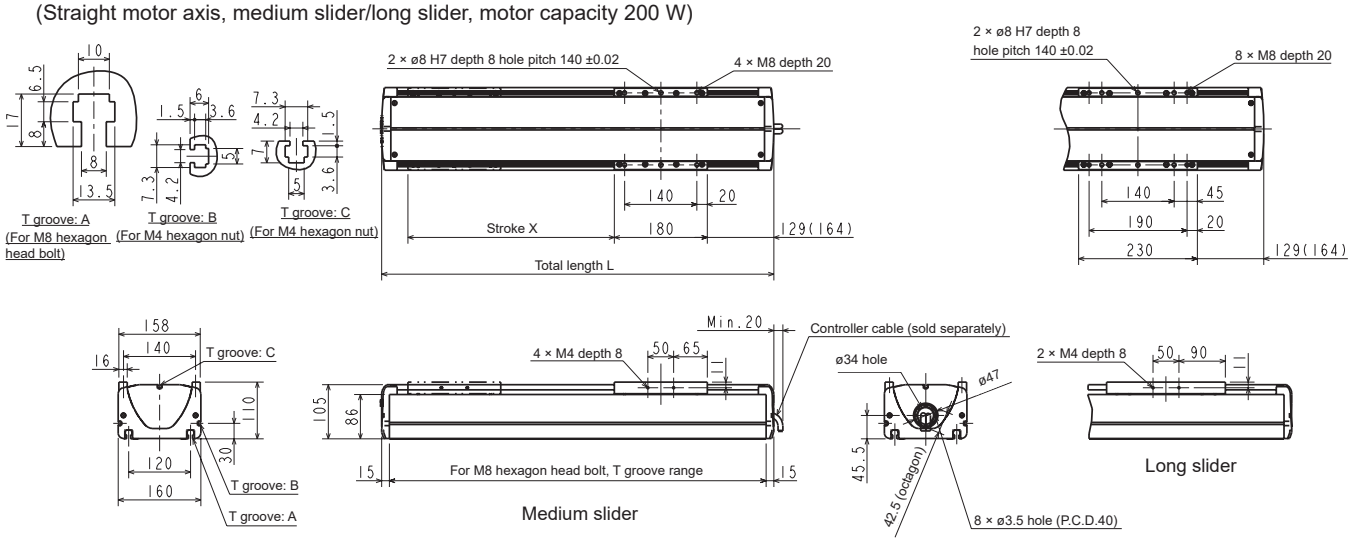

● Medium slider

Stroke (mm)	200	300	400	500	600	700	800	900	1000	1100	1200	1300	1400	1500	1600
Stroke code	20	30	40	50	60	70	80	90	A0	B0	C0	D0	E0	F0	G0
Total length L (mm)	560 (595)	660 (695)	760 (795)	860 (895)	960 (995)	1060 (1095)	1160 (1195)	1260 (1295)	1360 (1395)	1460 (1495)	1560 (1595)	1660 (1695)	1760 (1795)	1860 (1895)	1960 (1995)
Body weight (kg)	15.6 (16.4)	17.5 (18.3)	19.4 (20.2)	21.3 (22.1)	23.2 (24.0)	25.1 (25.9)	27.0 (27.8)	28.9 (29.7)	30.8 (31.6)	32.7 (33.5)	34.6 (35.4)	36.5 (37.3)	38.4 (39.2)	40.3 (41.1)	42.2 (43.0)

● Long slider

Stroke (mm)	250	350	450	550	650	750	850	950	1050	1150	1250	1350	1450	1550
Stroke code	25	35	45	55	65	75	85	95	A5	B5	C5	D5	E5	F5
Total length L (mm)	660 (695)	760 (795)	860 (895)	960 (995)	1060 (1095)	1160 (1195)	1260 (1295)	1360 (1395)	1460 (1495)	1560 (1595)	1660 (1695)	1760 (1795)	1860 (1895)	1960 (1995)
Body weight (kg)	18.1 (18.9)	20.0 (20.8)	21.9 (22.7)	23.8 (24.6)	25.7 (26.5)	27.6 (28.4)	29.5 (30.3)	31.4 (32.2)	33.3 (34.1)	35.2 (36.0)	37.1 (37.9)	39.0 (39.8)	40.9 (41.7)	42.8 (43.6)

* The value in ( ) is for axis with brake

● KBX-50F-UR-$^{M}_{L}$

(Right mounted motor, medium slider/long slider, motor capacity 200 W)

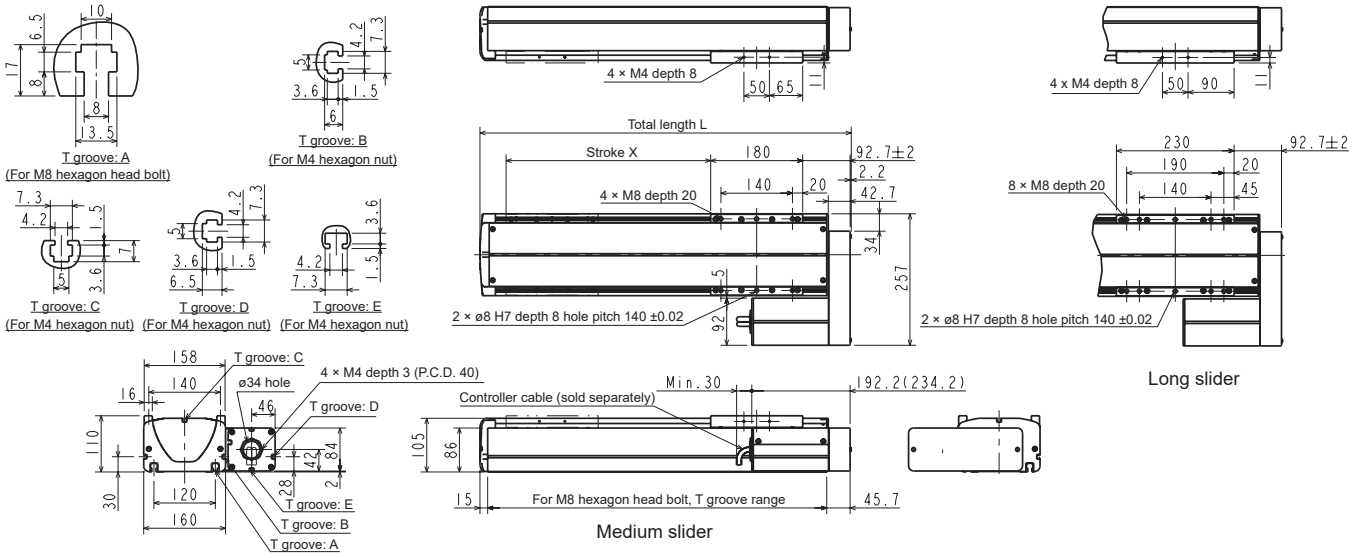

● Medium slider

Stroke (mm)	200	300	400	500	600	700	800	900	1000	1100	1200	1300	1400	1500
Stroke code	20	30	40	50	60	70	80	90	A0	B0	C0	D0	E0	F0
Total length L (mm)	525.9	625.9	725.9	825.9	925.9	1025.9	1125.9	1225.9	1325.9	1425.9	1525.9	1625.9	1725.9	1825.9
Body weight (kg)	12.3 (12.9)	14.2 (14.8)	16.1 (16.7)	18.0 (18.6)	19.9 (20.5)	21.8 (22.4)	23.7 (24.3)	25.6 (26.2)	27.5 (28.1)	29.4 (30.0)	31.3 (31.9)	33.2 (33.8)	35.1 (35.7)	37.0 (37.6)

● Long slider

Stroke (mm)	250	350	450	550	650	750	850	950	1050	1150	1250	1350	1450
Stroke code	25	35	45	55	65	75	85	95	A5	B5	C5	D5	E5
Total length L (mm)	625.9	725.9	825.9	925.9	1025.9	1125.9	1225.9	1325.9	1425.9	1525.9	1625.9	1725.9	1825.9
Body weight (kg)	14.8 (15.4)	16.7 (17.3)	18.6 (19.2)	20.5 (21.1)	22.4 (23.0)	24.3 (24.9)	26.2 (26.8)	28.1 (28.7)	30.0 (30.6)	31.9 (32.5)	33.8 (34.4)	35.7 (36.3)	37.6 (38.2)

* The value in ( ) is for axis with brake

Dimensions

● KBX-50F-UL-$^{M}_{L}$

(Left mounted motor, medium slider/long slider, motor capacity 200 W)

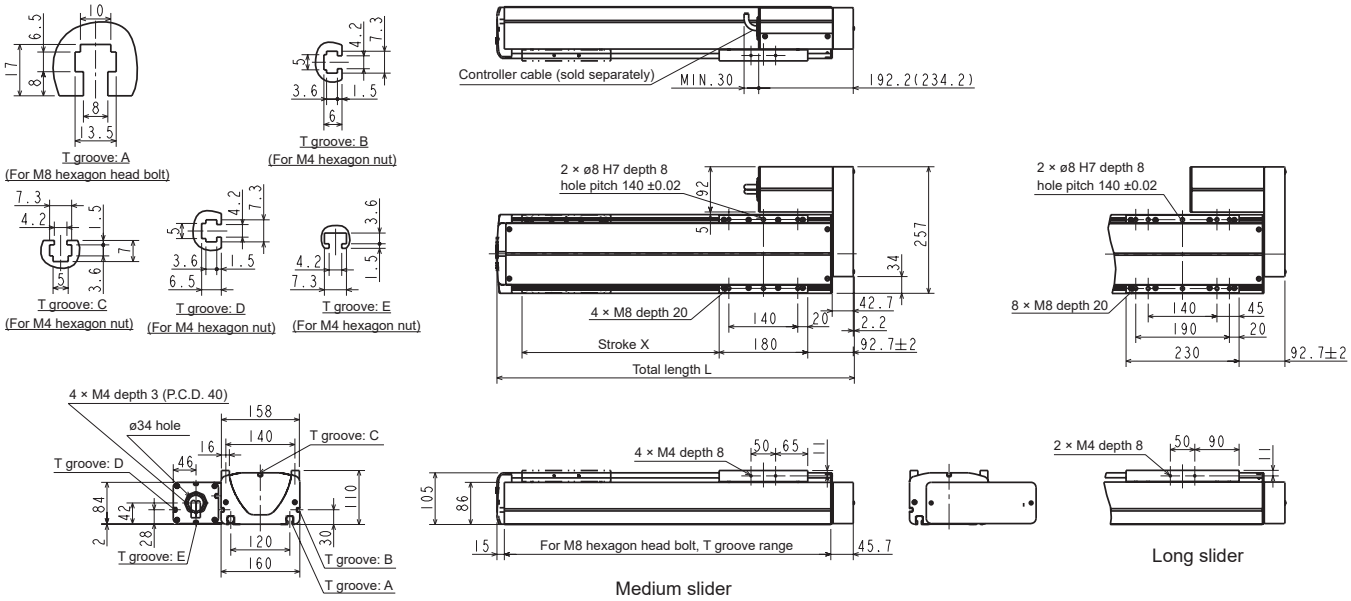

● KBX-50F-UU-$^{M}_{L}$

(Bottom mounted motor, medium slider/long slider, motor capacity 200 W)

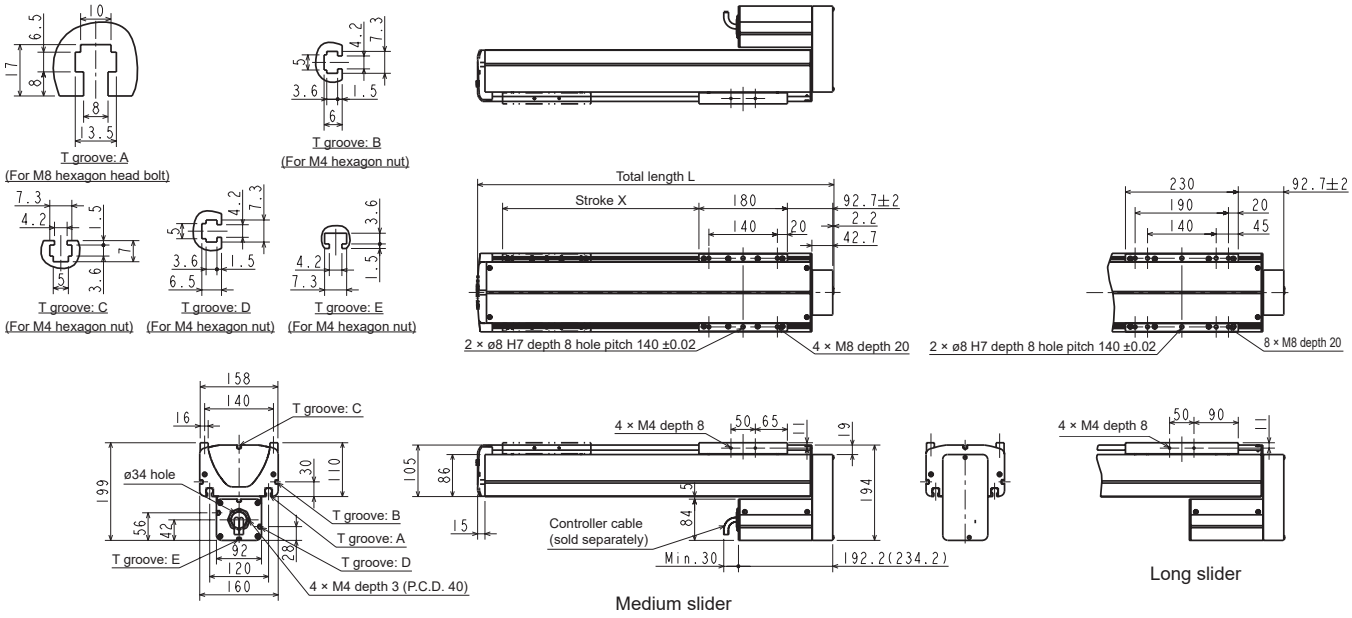

● Medium slider

Stroke (mm)	200	300	400	500	600	700	800	900	1000	1100	1200	1300	1400	1500
Stroke code	20	30	40	50	60	70	80	90	A0	B0	C0	D0	E0	F0
Total length L (mm)	525.9	625.9	725.9	825.9	925.9	1025.9	1125.9	1225.9	1325.9	1425.9	1525.9	1625.9	1725.9	1825.9
Body weight (kg)	12.3 (12.9)	14.2 (14.8)	16.1 (16.7)	18.0 (18.6)	19.9 (20.5)	21.8 (22.4)	23.7 (24.3)	25.6 (26.2)	27.5 (28.1)	29.4 (30.0)	31.3 (31.9)	33.2 (33.8)	35.1 (35.7)	37.0 (37.6)

● Long slider

Stroke (mm)	250	350	450	550	650	750	850	950	1050	1150	1250	1350	1450
Stroke code	25	35	45	55	65	75	85	95	A5	B5	C5	D5	E5
Total length L (mm)	625.9	725.9	825.9	925.9	1025.9	1125.9	1225.9	1325.9	1425.9	1525.9	1625.9	1725.9	1825.9
Body weight (kg)	14.8 (15.4)	16.7 (17.3)	18.6 (19.2)	20.5 (21.1)	22.4 (23.0)	24.3 (24.9)	26.2 (26.8)	28.1 (28.7)	30.0 (30.6)	31.9 (32.5)	33.8 (34.4)	35.7 (36.3)	37.6 (38.2)

* The value in ( ) is for axis with brake

Dimensions

● KBX-50G-ST-$^{M}_{L}$

(Straight motor axis, medium slider/long slider, motor capacity 400 W)

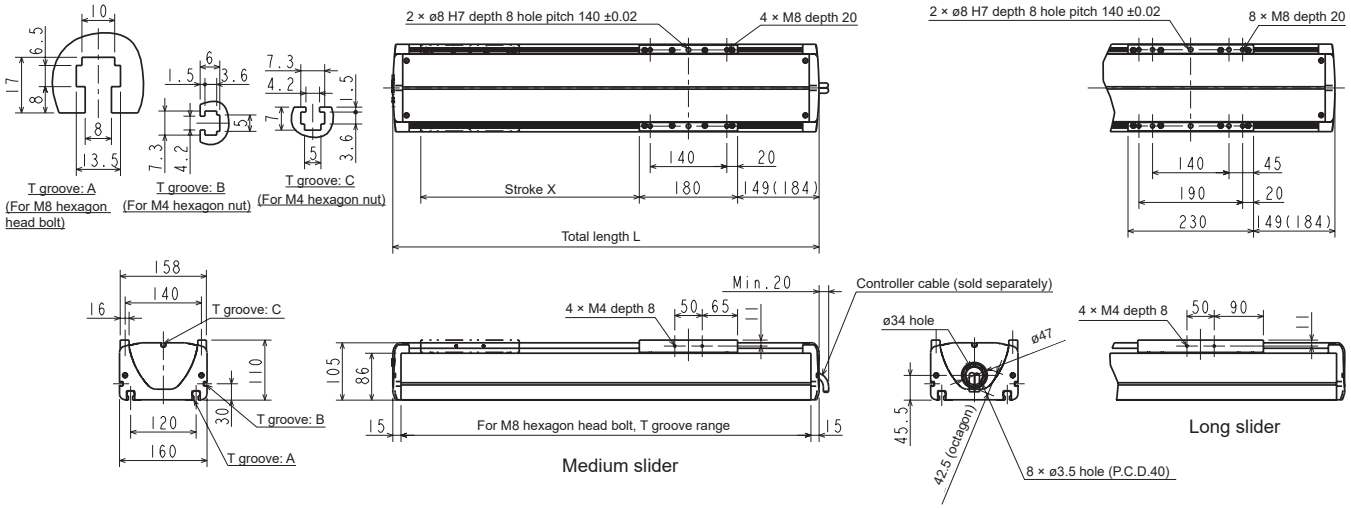

● Medium slider

Stroke (mm)	200	300	400	500	600	700	800	900	1000	1100	1200	1300	1400	1500	1600
Stroke code	20	30	40	50	60	70	80	90	A0	B0	C0	D0	E0	F0	G0
Total length L (mm)	580 (615)	680 (715)	780 (815)	880 (915)	980 (1015)	1080 (1115)	1180 (1215)	1280 (1315)	1380 (1415)	1480 (1515)	1580 (1615)	1680 (1715)	1780 (1815)	1880 (1915)	1980 (2015)
Body weight (kg)	16.3 (17.2)	18.2 (19.1)	20.1 (21.0)	22.0 (22.9)	23.9 (24.8)	25.8 (26.7)	27.7 (28.6)	29.6 (30.5)	31.5 (32.4)	33.4 (34.3)	35.3 (36.2)	37.2 (38.1)	39.1 (40.0)	41.0 (41.9)	42.9 (43.8)

● Long slider

Stroke (mm)	250	350	450	550	650	750	850	950	1050	1150	1250	1350	1450	1550
Stroke code	25	35	45	55	65	75	85	95	A5	B5	C5	D5	E5	F5
Total length L (mm)	680 (715)	780 (815)	880 (915)	980 (1015)	1080 (1115)	1180 (1215)	1280 (1315)	1380 (1415)	1480 (1515)	1580 (1615)	1680 (1715)	1780 (1815)	188 0(1915)	1980 (2015)
Body weight (kg)	18.8 (19.7)	20.7 (21.6)	22.6 (23.5)	24.5 (25.4)	26.4 (27.3)	28.3 (29.2)	30.2 (31.1)	32.1 (33.0)	34.0 (34.9)	35.9 (36.8)	37.8 (38.7)	39.7 (40.6)	41.6 (42.5)	43.5 (44.4)

* The value in ( ) is for axis with brake

● KBX-50G-UR-$^{M}_{L}$

(Right mounted motor, medium slider/long slider, motor capacity 200 W)

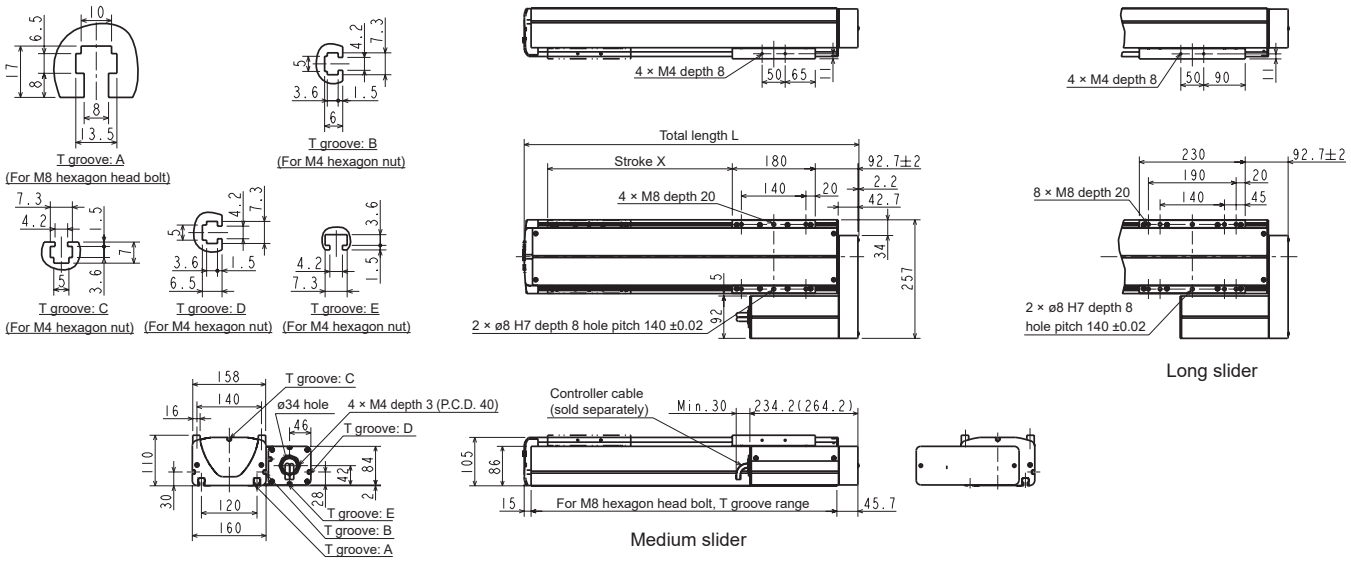

● Medium slider

Stroke (mm)	200	300	400	500	600	700	800	900	1000	1100	1200	1300	1400	1500
Stroke code	20	30	40	50	60	70	80	90	A0	B0	C0	D0	E0	F0
Total length L (mm)	525.9	625.9	725.9	825.9	925.9	1025.9	1125.9	1225.9	1325.9	1425.9	1525.9	1625.9	1725.9	1825.9
Body weight (kg)	12.3 (12.9)	14.2 (14.8)	16.1 (16.7)	18.0 (18.6)	19.9 (20.5)	21.8 (22.4)	23.7 (24.3)	25.6 (26.2)	27.5 (28.1)	29.4 (30.0)	31.3 (31.9)	33.2 (33.8)	35.1 (35.7)	37.0 (37.6)

● Long slider

Stroke (mm)	250	350	450	550	650	750	850	950	1050	1150	1250	1350	1450
Stroke code	25	35	45	55	65	75	85	95	A5	B5	C5	D5	E5
Total length L (mm)	625.9	725.9	825.9	925.9	1025.9	1125.9	1225.9	1325.9	1425.9	1525.9	1625.9	1725.9	1825.9
Body weight (kg)	14.8 (15.4)	16.7 (17.3)	18.6 (19.2)	20.5 (21.1)	22.4 (23.0)	24.3 (24.9)	26.2 (26.8)	28.1 (28.7)	30.0 (30.6)	31.9 (32.5)	33.8 (34.4)	35.7 (36.3)	37.6 (38.2)

* The value in ( ) is for axis with brake

Dimensions

● KBX-50G-UL-$^{M}_{L}$

(Left mounted motor, medium slider/long slider, motor capacity 400 W)

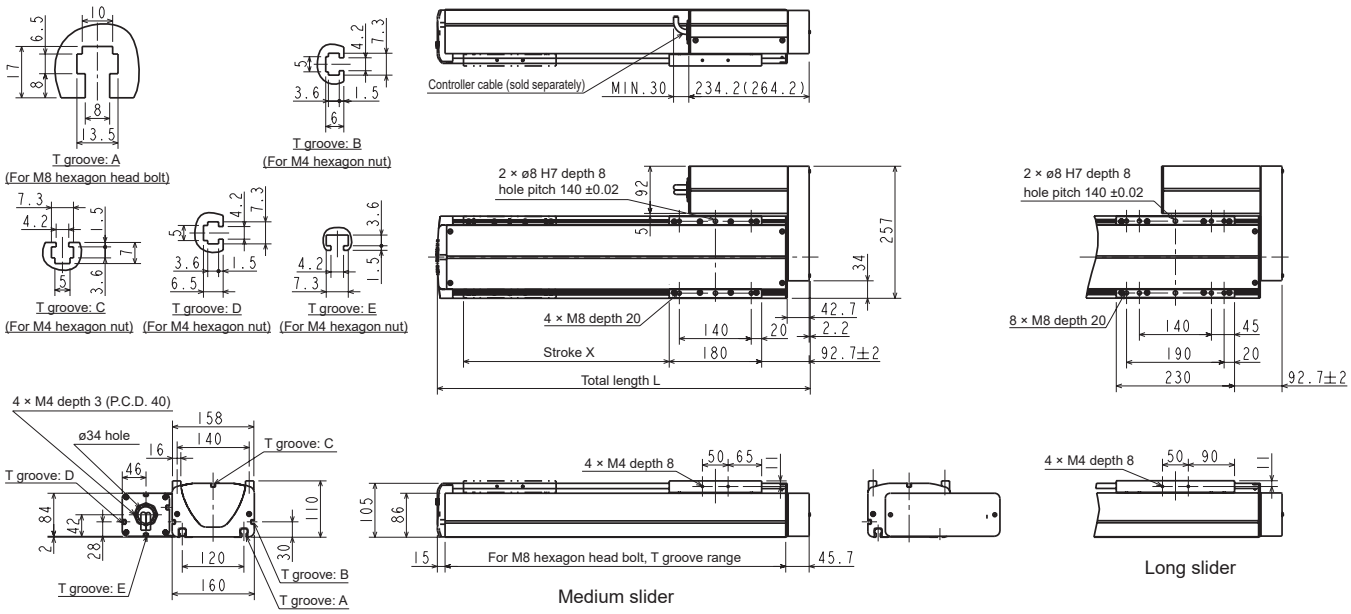

● KBX-50G-UU-$^{M}_{L}$

(Bottom mounted motor, medium slider/long slider, motor capacity 400 W)

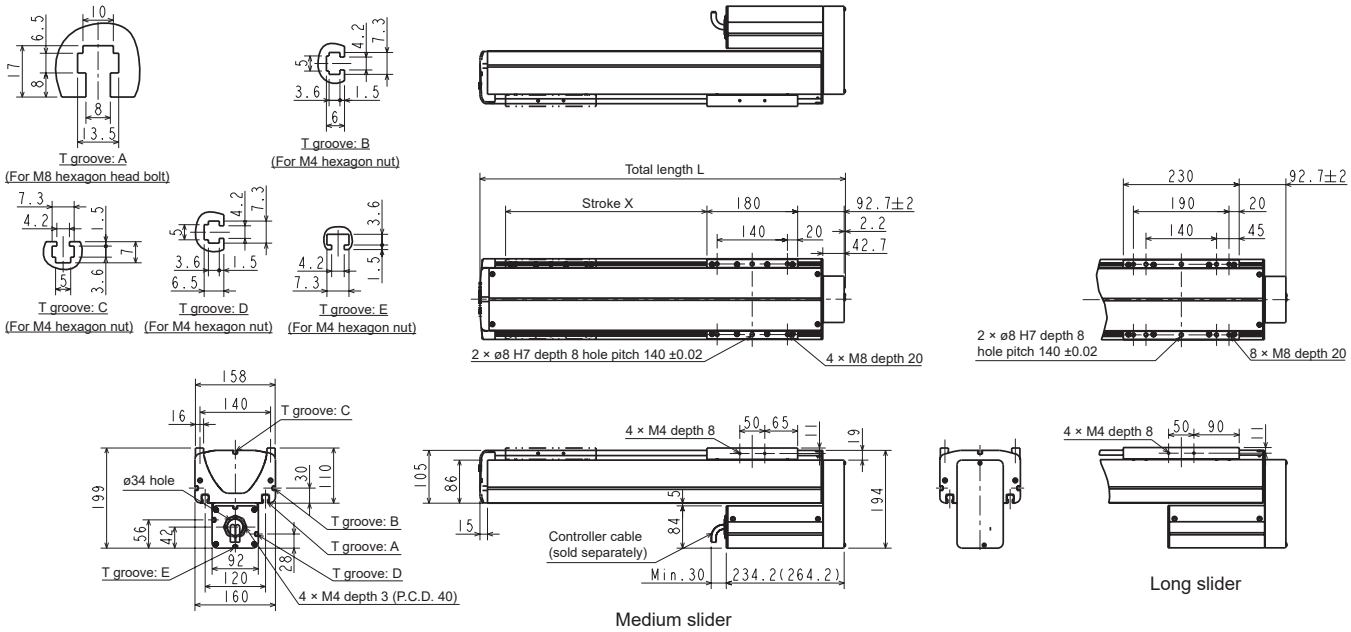

● Medium slider

Stroke (mm)	200	300	400	500	600	700	800	900	1000	1100	1200	1300	1400	1500
Stroke code	20	30	40	50	60	70	80	90	A0	B0	C0	D0	E0	F0
Total length L (mm)	525.9	625.9	725.9	825.9	925.9	1025.9	1125.9	1225.9	1325.9	1425.9	1525.9	1625.9	1725.9	1825.9
Body weight (kg)	12.8 (13.4)	14.7 (15.3)	16.6 (17.2)	18.5 (19.1)	20.4 (21.0)	22.3 (22.9)	24.2 (24.8)	26.1 (26.7)	28.0 (28.6)	29.9 (30.5)	31.8 (32.4)	33.7(34.3)	35.6 (36.2)	37.5 (38.1)

● Long slider

Stroke (mm)	250	350	450	550	650	750	850	950	1050	1150	1250	1350	1450
Stroke code	25	35	45	55	65	75	85	95	A5	B5	C5	D5	E5
Total length L (mm)	625.9	725.9	825.9	925.9	1025.9	1125.9	1225.9	1325.9	1425.9	1525.9	1625.9	1725.9	1825.9
Body weight (kg)	15.3 (15.9)	17.2 (17.8)	19.1 (19.7)	21.0 (21.6)	22.9 (23.5)	24.8 (25.4)	26.7 (27.3)	28.6 (29.2)	30.5 (31.1)	32.4 (33.0)	34.3 (34.9)	36.2 (36.8)	38.1 (38.7)

* The value in ( ) is for axis with brake

Dimensions

● KBX-60G-ST-$^{M}_{L}$

(Straight motor axis, medium slider/long slider, motor capacity 400 W)

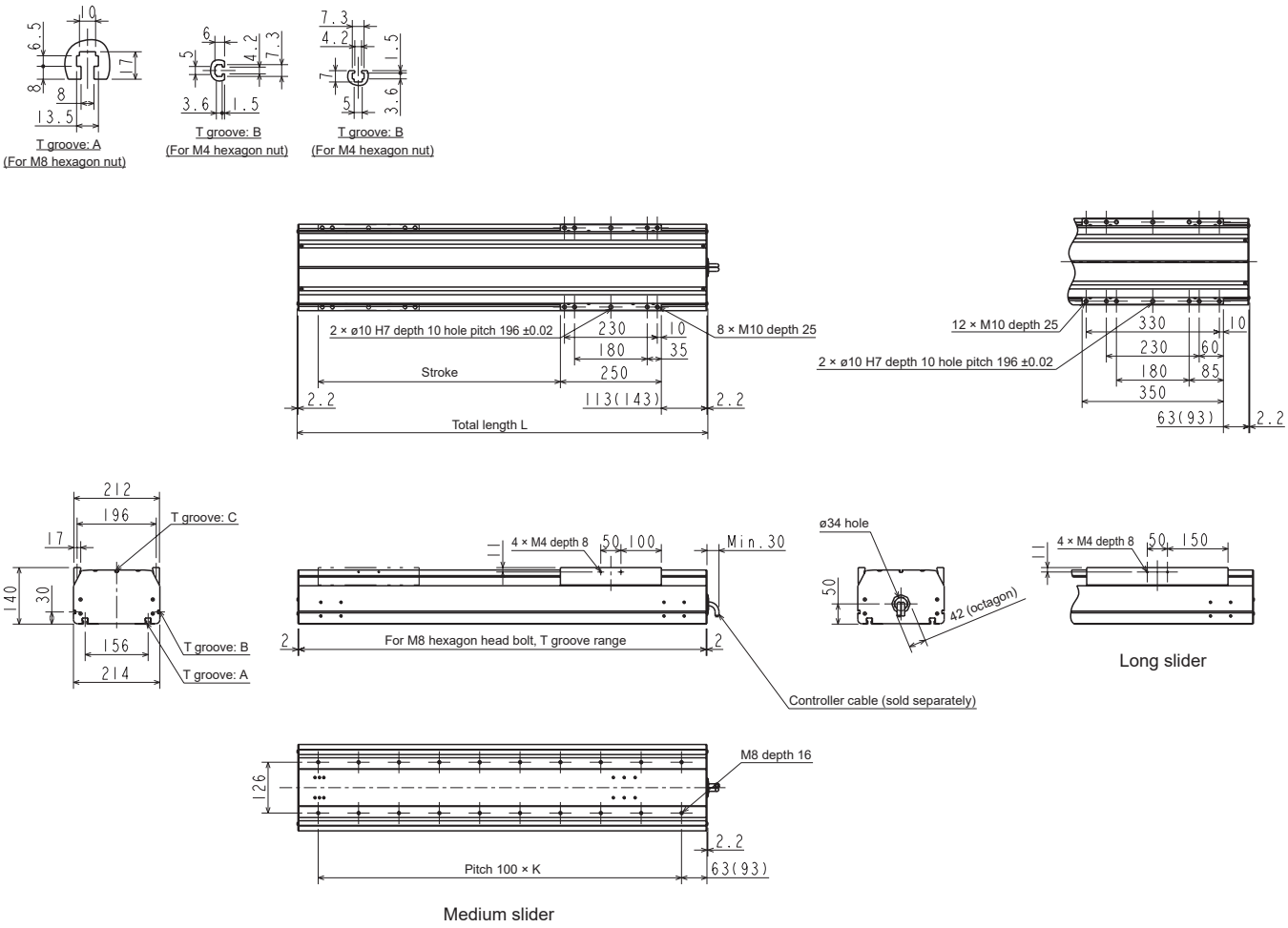

● Medium slider

Stroke (mm)	200	300	400	500	600	700	800	900	1000	1100	1200	1300	1400	1500
Stroke code	20	30	40	50	60	70	80	90	A0	B0	C0	D0	E0	F0
Total length L (mm)	617.4 (647.4)	717.4 (747.4)	817.4 (847.4)	917.4 (947.4)	1017.4 (1047.4)	1117.4 (1147.4)	1217.4 (1247.4)	1317.4 (1347.4)	1417.4 (1447.4)	1517.4 (1547.4)	1617.4 (1647.4)	1717.4 (1747.4)	1817.4 (1847.4)	1917.4 (1947.4)
K	5	6	7	8	9	10	11	12	13	14	15	16	17	18
Body weight (kg)	24.0 (25.2)	26.8 (28.0)	29.5 (30.7)	32.3 (33.5)	35.0 (36.2)	37.8 (39.0)	40.5 (41.7)	43.3 (44.5)	46.0 (47.2)	48.8 (50.0)	51.5 (52.7)	54.3 (55.5)	57.0 (58.2)	59.8 (61.0)

● Long slider

Stroke (mm)	150	250	350	450	550	650	750	850	950	1050	1150	1250	1350	1450
Stroke code	15	25	35	45	55	65	75	85	95	A5	B5	C5	D5	E5
Total length L (mm)	617.4 (647.4)	717.4 (747.4)	817.4 (847.4)	917.4 (947.4)	1017.4 (1047.4)	1117.4 (1147.4)	1217.4 (1247.4)	1317.4 (1347.4)	1417.4 (1447.4)	1517.4 (1547.4)	1617.4 (1647.4)	1717.4 (1747.4)	1817.4 (1847.4)	1917.4 (1947.4)
K	5	6	7	8	9	10	11	12	13	14	15	16	17	18
Body weight (kg)	25.5 (26.7)	28.3 (29.5)	31.0 (32.2)	33.8 (35.0)	36.5 (37.7)	39.3 (40.5)	42.0 (43.2)	44.8 (46.0)	47.5 (48.7)	50.3 (51.5)	53.0 (54.2)	55.8 (57.0)	58.5 (59.7)	61.3 (62.5)

* The value in ( ) is for axis with brake

Dimensions

● KBX-60J-ST- M/L

(Straight motor axis, medium slider/long slider, motor capacity 750 W)

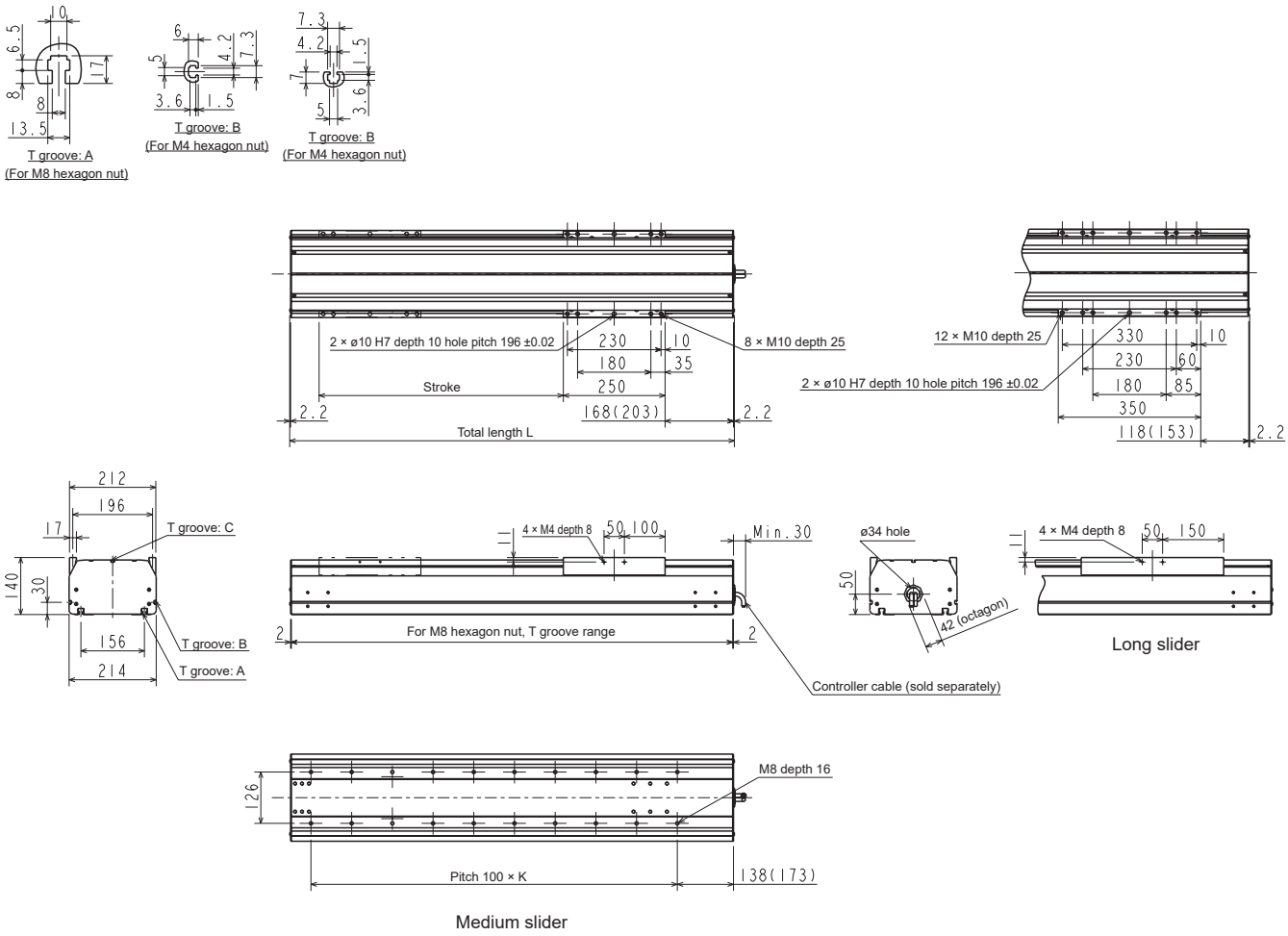

● Medium slider

Stroke (mm)	200	300	400	500	600	700	800	900	1000	1100	1200	1300	1400	1500	1600	1700
Stroke code	20	30	40	50	60	70	80	90	A0	B0	C0	D0	E0	F0	G0	H0
Total length L (mm)	692.4 (727.4)	792.4 (827.4)	892.4 (927.4)	992.4 (1027.4)	1092.4 (1127.4)	1192.4 (1227.4)	1292.4 (1327.4)	1392.4 (1427.4)	1492.4 (1527.4)	1592.4 (1627.4)	1692.4 (1727.4)	1792.4 (1827.4)	1892.4 (1927.4)	1992.4 (2027.4)	2092.4 (2127.4)	2192.4 (2227.4)
K	5	6	7	8	9	10	11	12	13	14	15	16	17	18	19	20
Body weight (kg)	37.2 (38.8)	39.9 (41.6)	42.7 (44.3)	45.4 (47.1)	48.2 (49.8)	50.9 (52.6)	53.7 (55.3)	56.4 (58.1)	59.2 (60.8)	61.9 (63.6)	64.7 (66.3)	67.4 (69.1)	70.2 (71.8)	72.9 (74.6)	75.7 (77.3)	78.4 (80.1)

● Long slider

Stroke (mm)	150	250	350	450	550	650	750	850	950	1050	1150	1250	1350	1450	1550	1650
Stroke code	15	25	35	45	55	65	75	85	95	A5	B5	C5	D5	E5	F5	G5
Total length L (mm)	692.4 (727.4)	792.4 (827.4)	892.4 (927.4)	992.4 (1027.4)	1092.4 (1127.4)	1192.4 (1227.4)	1292.4 (1327.4)	1392.4 (1427.4)	1492.4 (1527.4)	1592.4 (1627.4)	1692.4 (1727.4)	1792.4 (1827.4)	1892.4 (1927.4)	1992.4 (2027.4)	2092.4 (2127.4)	2192.4 (2227.4)
K	5	6	7	8	9	10	11	12	13	14	15	16	17	18	19	20
Body weight (kg)	38.7 (40.3)	41.4 (43.1)	44.2 (45.8)	46.9 (48.6)	49.7 (51.3)	52.4 (54.1)	55.2 (56.8)	57.9 (59.6)	60.7 (62.3)	63.4 (65.1)	66.2 (67.8)	68.9 (70.6)	71.7 (73.3)	74.4 (76.1)	77.2 (78.8)	79.9 (81.6)

* The value in ( ) is for axis with brake

Dimensions

● KBX-10E-BT-$^{S}_{M}$

(Top mounted motor, short slider/medium slider, motor capacity 100 W)

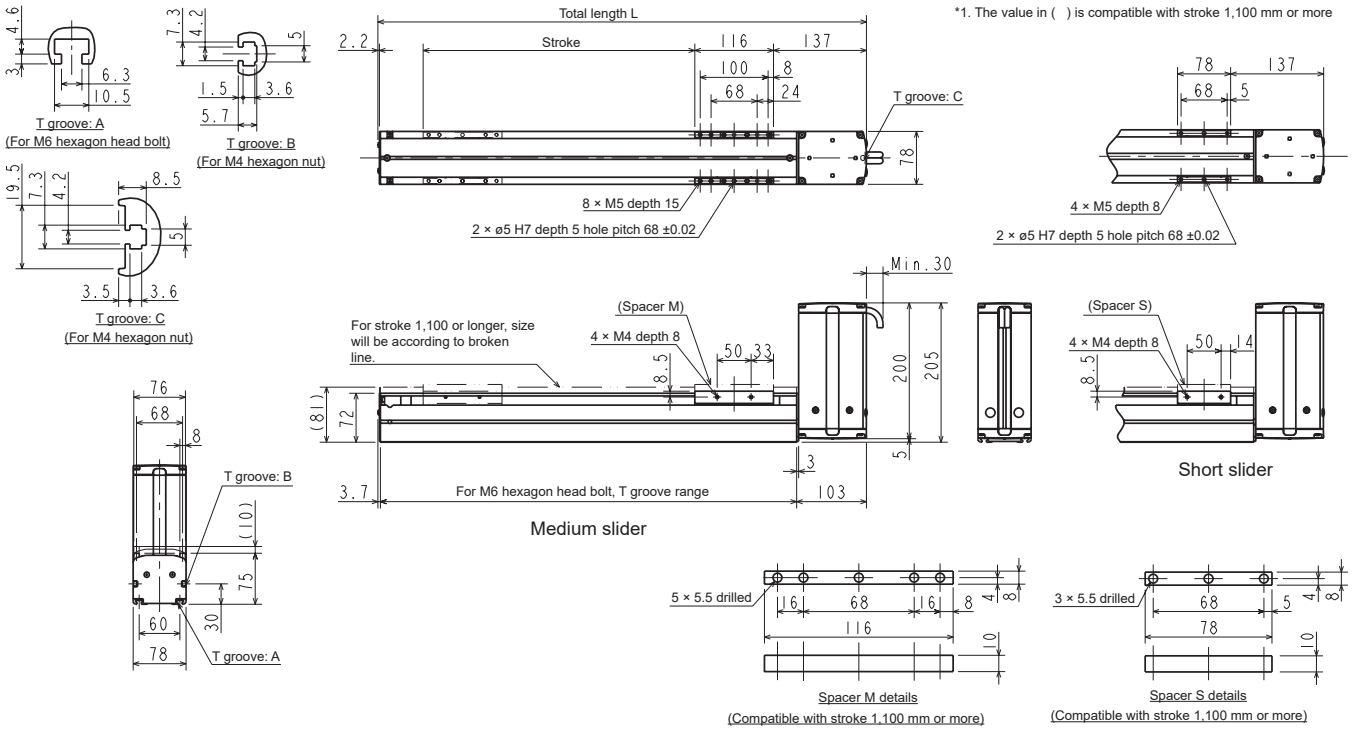

● KBX-10E-BR-$^{S}_{M}$

(Right mounted motor, short slider/medium slider, motor capacity 100 W)

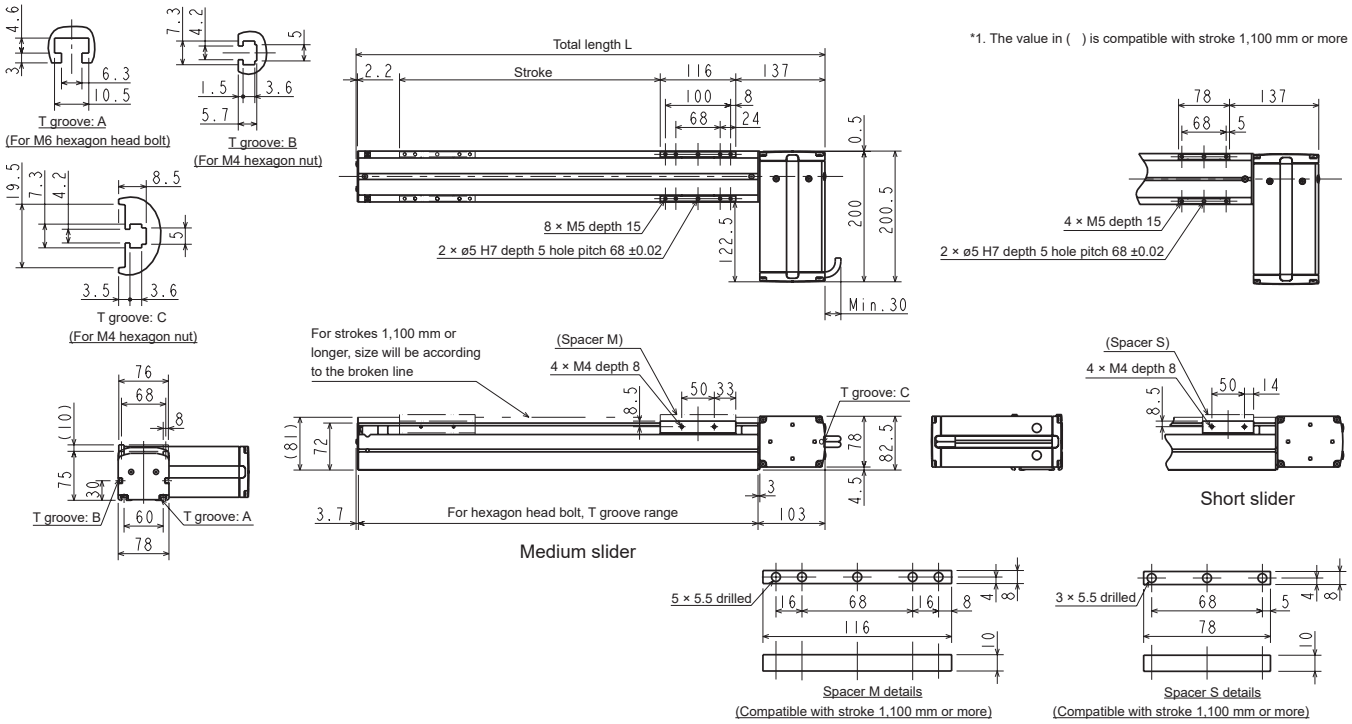

● Short slider

Stroke (mm)	150	250	350	450	550	650	750	850	950	1050	1150	1250	1350	1450	1550	1650	1750	1850	1950	2050	2150	2250	2350	2450	2550
Stroke code	15	25	35	45	55	65	75	85	95	A5	B5	C5	D5	E5	F5	G5	H5	J5	K5	L5	M5	N5	P5	Q5	R5
Total length L (mm)	419.7	519.7	619.7	719.7	819.7	919.7	1019.7	1119.7	1219.7	1319.7	1419.7	1519.7	1619.7	1719.7	1819.7	1919.7	2019.7	2119.7	2219.7	2319.7	2419.7	2519.7	2619.7	2719.7	2819.7
Body weight (kg)	4.5	5.2	5.9	6.5	7.2	7.9	8.5	9.2	9.8	10.5	11.7	12.4	13.1	13.8	14.5	15.2	15.9	16.6	17.3	18.0	18.7	19.4	20.1	20.8	21.5

● Medium slider

Stroke (mm)	100	200	300	400	500	600	700	800	900	1000	1100	1200	1300	1400	1500	1600	1700	1800	1900	2000	2100	2200	2300	2400	2500
Stroke code	10	20	30	40	50	60	70	80	90	A0	B0	C0	D0	E0	F0	G0	H0	J0	K0	L0	M0	N0	P0	Q0	R0
Total length L (mm)	419.7	519.7	619.7	719.7	819.7	919.7	1019.7	1119.7	1219.7	1319.7	1419.7	1519.7	1619.7	1719.7	1819.7	1919.7	2019.7	2119.7	2219.7	2319.7	2419.7	2519.7	2619.7	2719.7	2819.7
Body weight (kg)	4.9	5.6	6.2	6.9	7.6	8.2	8.9	9.6	10.2	10.9	12.1	12.8	13.5	14.2	14.9	15.6	16.3	17.0	17.8	18.5	19.2	19.9	20.6	21.3	22.0

Dimensions

● KBX-10E-BL-$^{S}_{M}$

(Left mounted motor, short slider/medium slider, motor capacity 100 W)

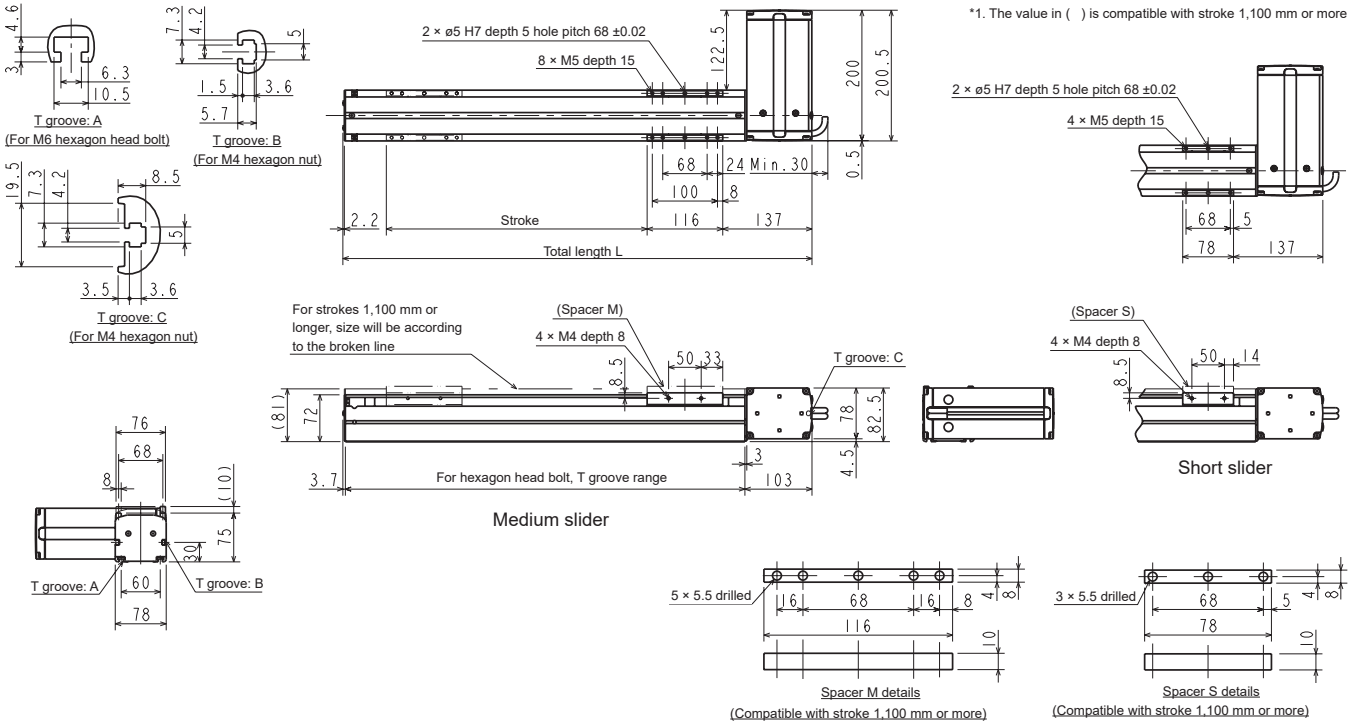

● KBX-10E-BU-$^{S}_{M}$

(Bottom mounted motor, short slider/medium slider, motor capacity 100 W)

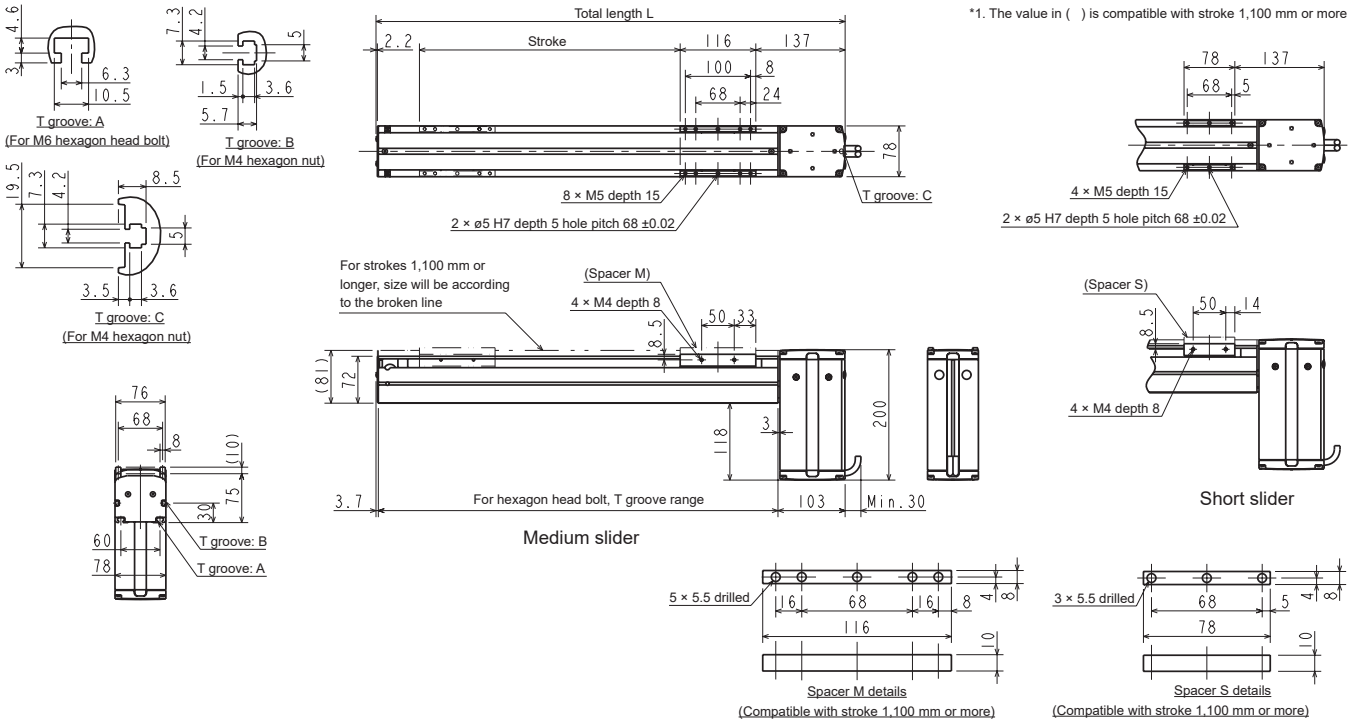

● Short slider

Stroke (mm)	150	250	350	450	550	650	750	850	950	1050	1150	1250	1350	1450	1550	1650	1750	1850	1950	2050	2150	2250	2350	2450	2550
Stroke code	15	25	35	45	55	65	75	85	95	A5	B5	C5	D5	E5	F5	G5	H5	J5	K5	L5	M5	N5	P5	Q5	R5
Total length L (mm)	419.7	519.7	619.7	719.7	819.7	919.7	1019.7	1119.7	1219.7	1319.7	1419.7	1519.7	1619.7	1719.7	1819.7	1919.7	2019.7	2119.7	2219.7	2319.7	2419.7	2519.7	2619.7	2719.7	2819.7
Body weight (kg)	4.5	5.2	5.9	6.5	7.2	7.9	8.5	9.2	9.8	10.5	11.7	12.4	13.1	13.8	14.5	15.2	15.9	16.6	17.3	18.0	18.7	19.4	20.1	20.8	21.5

● Medium slider

Stroke (mm)	100	200	300	400	500	600	700	800	900	1000	1100	1200	1300	1400	1500	1600	1700	1800	1900	2000	2100	2200	2300	2400	2500
Stroke code	10	20	30	40	50	60	70	80	90	A0	B0	C0	D0	E0	F0	G0	H0	J0	K0	L0	M0	N0	P0	Q0	R0
Total length L (mm)	419.7	519.7	619.7	719.7	819.7	919.7	1019.7	1119.7	1219.7	1319.7	1419.7	1519.7	1619.7	1719.7	1819.7	1919.7	2019.7	2119.7	2219.7	2319.7	2419.7	2519.7	2619.7	2719.7	2819.7
Body weight (kg)	4.9	5.6	6.2	6.9	7.6	8.2	8.9	9.6	10.2	10.9	12.1	12.8	13.5	14.2	14.9	15.6	16.3	17.0	17.8	18.5	19.2	19.9	20.6	21.3	22.0

Dimensions

● KBX-10F-BT-$^{S}_{M}$

(Top mounted motor, short slider/long slider, motor capacity 200 W)

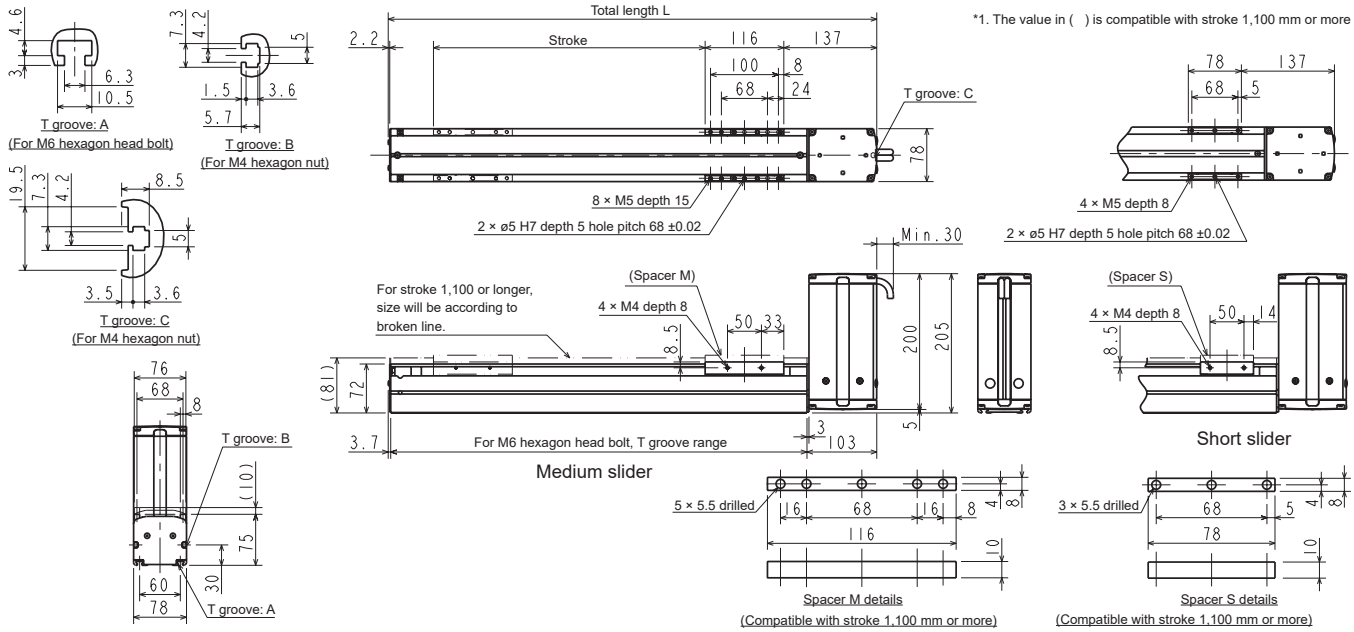

● KBX-10F-BR-$^{S}_{M}$

(Right mounted motor, short slider/long slider, motor capacity 200 W)

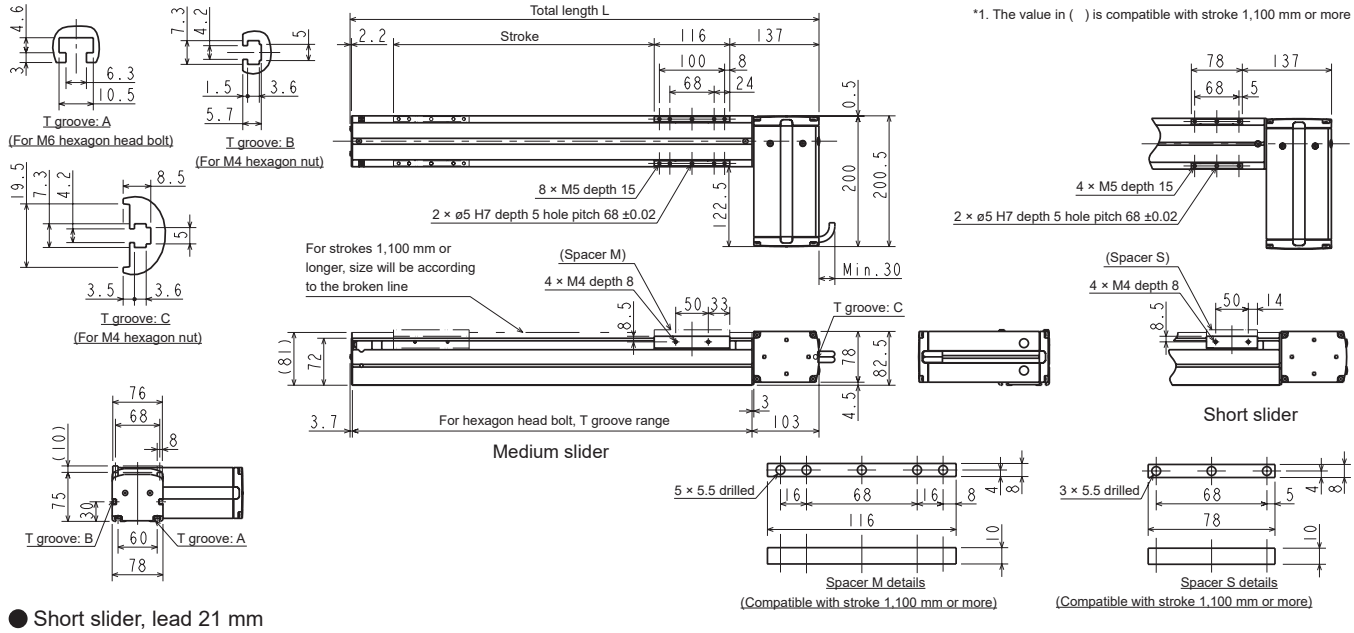

● Short slider, lead 21 mm

Stroke (mm)	150	250	350	450	550	650	750	850	950	1050	1150	1250	1350	1450	1550	1650	1750	1850	1950	2050	2150	2250	2350	2450	2550
Stroke code	15	25	35	45	55	65	75	85	95	A5	B5	C5	D5	E5	F5	G5	H5	J5	K5	L5	M5	N5	P5	Q5	R5
Total length L (mm)	419.7	519.7	619.7	719.7	819.7	919.7	1019.7	1119.7	1219.7	1319.7	1419.7	1519.7	1619.7	1719.7	1819.7	1919.7	2019.7	2119.7	2219.7	2319.7	2419.7	2519.7	2619.7	2719.7	2819.7
Body weight (kg)	5.1	5.8	6.5	7.1	7.8	8.5	9.1	9.8	10.4	11.1	12.3	13.0	13.7	14.4	15.1	15.8	16.5	17.2	17.9	18.6	19.3	20.0	20.7	21.4	22.1

● Medium slider, lead 21 mm

Stroke (mm)	100	200	300	400	500	600	700	800	900	1000	1100	1200	1300	1400	1500	1600	1700	1800	1900	2000	2100	2200	2300	2400	2500
Stroke code	10	20	30	40	50	60	70	80	90	A0	B0	C0	D0	E0	F0	G0	H0	J0	K0	L0	M0	N0	P0	Q0	R0
Total length L (mm)	419.7	519.7	619.7	719.7	819.7	919.7	1019.7	1119.7	1219.7	1319.7	1419.7	1519.7	1619.7	1719.7	1819.7	1919.7	2019.7	2119.7	2219.7	2319.7	2419.7	2519.7	2619.7	2719.7	2819.7
Body weight (kg)	5.5	6.2	6.8	7.5	8.2	8.8	9.5	10.2	10.8	11.5	12.7	13.4	14.1	14.8	15.5	16.2	16.9	17.6	18.4	19.1	19.8	20.5	21.2	21.9	22.6

● Short slider, lead 42 mm

Stroke (mm)	150	250	350	450	550	650	750	850	950	1050	1150	1250	1350	1450	1550	1650	1750	1850	1950	2050	2150	2250	2350	2450	2550
Stroke code	15	25	35	45	55	65	75	85	95	A5	B5	C5	D5	E5	F5	G5	H5	J5	K5	L5	M5	N5	P5	Q5	R5
Total length L (mm)	419.7	519.7	619.7	719.7	819.7	919.7	1019.7	1119.7	1219.7	1319.7	1419.7	1519.7	1619.7	1719.7	1819.7	1919.7	2019.7	2119.7	2219.7	2319.7	2419.7	2519.7	2619.7	2719.7	2819.7
Body weight (kg)	4.5	5.2	5.9	6.5	7.2	7.9	8.5	9.2	9.8	10.5	11.7	12.4	13.1	13.8	14.5	15.2	15.9	16.6	17.3	18.0	18.7	19.4	20.1	20.8	21.5

● Medium slider, lead 42 mm

Stroke (mm)	100	200	300	400	500	600	700	800	900	1000	1100	1200	1300	1400	1500	1600	1700	1800	1900	2000	2100	2200	2300	2400	2500
Stroke code	10	20	30	40	50	60	70	80	90	A0	B0	C0	D0	E0	F0	G0	H0	J0	K0	L0	M0	N0	P0	Q0	R0
Total length L (mm)	419.7	519.7	619.7	719.7	819.7	919.7	1019.7	1119.7	1219.7	1319.7	1419.7	1519.7	1619.7	1719.7	1819.7	1919.7	2019.7	2119.7	2219.7	2319.7	2419.7	2519.7	2619.7	2719.7	2819.7
Body weight (kg)	4.9	5.6	6.2	6.9	7.6	8.2	8.9	9.6	10.2	10.9	12.1	12.8	13.5	14.2	14.9	15.6	16.3	17.0	17.8	18.5	19.2	19.9	20.6	21.3	22.0

Dimensions

● KBX-10F-BL-$^{S}_{M}$

(Left mounted motor, short slider/medium slider, motor capacity 200 W)

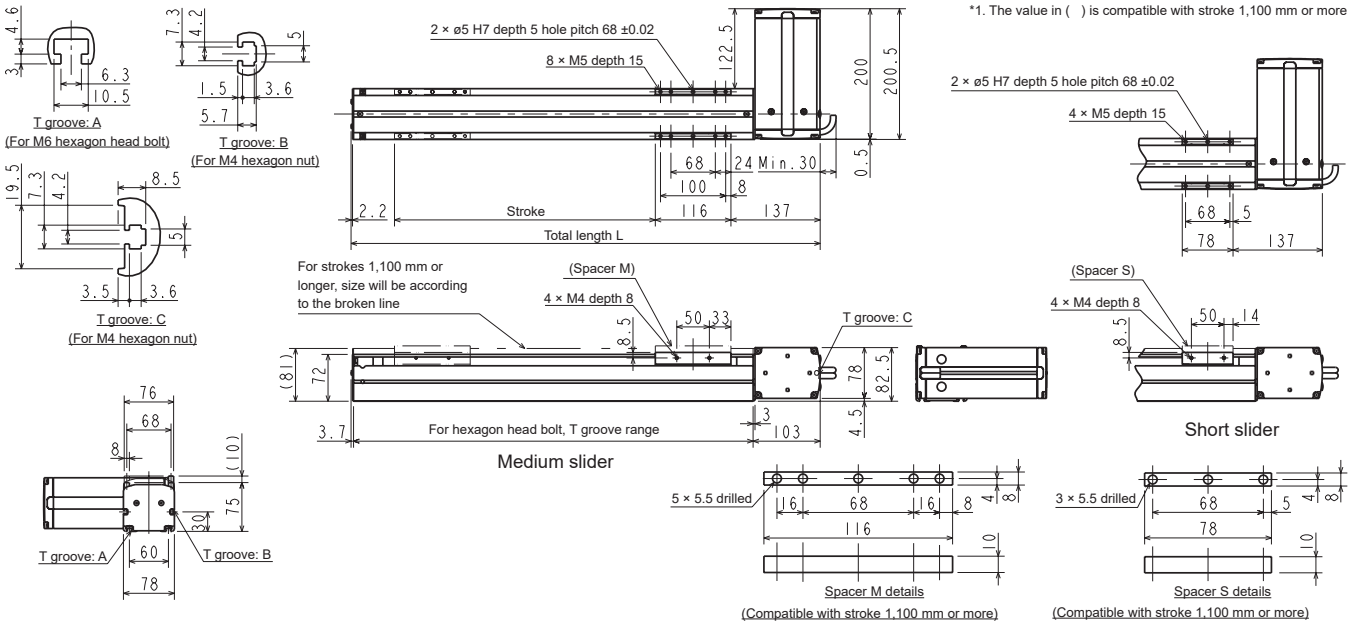

● KBX-10F-BU-$^{S}_{M}$

(Bottom mounted motor, short slider/medium slider, motor capacity 200 W)

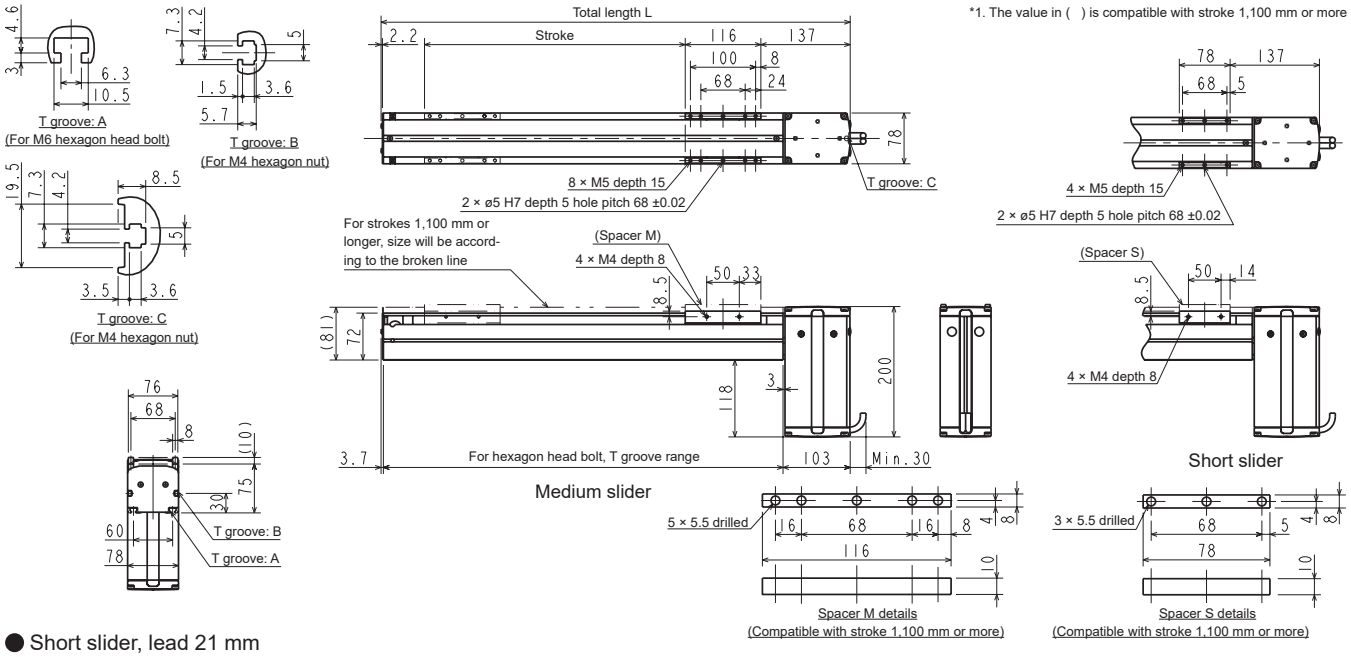

● Short slider, lead 21 mm

Stroke (mm)	150	250	350	450	550	650	750	850	950	1050	1150	1250	1350	1450	1550	1650	1750	1850	1950	2050	2150	2250	2350	2450	2550
Stroke code	15	25	35	45	55	65	75	85	95	A5	B5	C5	D5	E5	F5	G5	H5	J5	K5	L5	M5	N5	P5	Q5	R5
Total length L (mm)	419.7	519.7	619.7	719.7	819.7	919.7	1019.7	1119.7	1219.7	1319.7	1419.7	1519.7	1619.7	1719.7	1819.7	1919.7	2019.7	2119.7	2219.7	2319.7	2419.7	2519.7	2619.7	2719.7	2819.7
Body weight (kg)	5.1	5.8	6.5	7.1	7.8	8.5	9.1	9.8	10.4	11.1	12.3	13.0	13.7	14.4	15.1	15.8	16.5	17.2	17.9	18.6	19.3	20.0	20.7	21.4	22.1

● Medium slider, lead 21 mm

Stroke (mm)	100	200	300	400	500	600	700	800	900	1000	1100	1200	1300	1400	1500	1600	1700	1800	1900	2000	2100	2200	2300	2400	2500
Stroke code	10	20	30	40	50	60	70	80	90	A0	B0	C0	D0	E0	F0	G0	H0	J0	K0	L0	M0	N0	P0	Q0	R0
Total length L (mm)	419.7	519.7	619.7	719.7	819.7	919.7	1019.7	1119.7	1219.7	1319.7	1419.7	1519.7	1619.7	1719.7	1819.7	1919.7	2019.7	2119.7	2219.7	2319.7	2419.7	2519.7	2619.7	2719.7	2819.7
Body weight (kg)	5.5	6.2	6.8	7.5	8.2	8.8	9.5	10.2	10.8	11.5	12.7	13.4	14.1	14.8	15.5	16.2	16.9	17.6	18.4	19.1	19.8	20.5	21.2	21.9	22.6

● Short slider, lead 42 mm

Stroke (mm)	150	250	350	450	550	650	750	850	950	1050	1150	1250	1350	1450	1550	1650	1750	1850	1950	2050	2150	2250	2350	2450	2550
Stroke code	15	25	35	45	55	65	75	85	95	A5	B5	C5	D5	E5	F5	G5	H5	J5	K5	L5	M5	N5	P5	Q5	R5
Total length L (mm)	419.7	519.7	619.7	719.7	819.7	919.7	1019.7	1119.7	1219.7	1319.7	1419.7	1519.7	1619.7	1719.7	1819.7	1919.7	2019.7	2119.7	2219.7	2319.7	2419.7	2519.7	2619.7	2719.7	2819.7
Body weight (kg)	4.5	5.2	5.9	6.5	7.2	7.9	8.5	9.2	9.8	10.5	11.7	12.4	13.1	13.8	14.5	15.2	15.9	16.6	17.3	18.0	18.7	19.4	20.1	20.8	21.5

● Medium slider, lead 42 mm

Stroke (mm)	100	200	300	400	500	600	700	800	900	1000	1100	1200	1300	1400	1500	1600	1700	1800	1900	2000	2100	2200	2300	2400	2500
Stroke code	10	20	30	40	50	60	70	80	90	A0	B0	C0	D0	E0	F0	G0	H0	J0	K0	L0	M0	N0	P0	Q0	R0
Total length L (mm)	419.7	519.7	619.7	719.7	819.7	919.7	1019.7	1119.7	1219.7	1319.7	1419.7	1519.7	1619.7	1719.7	1819.7	1919.7	2019.7	2119.7	2219.7	2319.7	2419.7	2519.7	2619.7	2719.7	2819.7
Body weight (kg)	4.9	5.6	6.2	6.9	7.6	8.2	8.9	9.6	10.2	10.9	12.1	12.8	13.5	14.2	14.9	15.6	16.3	17.0	17.8	18.5	19.2	19.9	20.6	21.3	22.0

Dimensions

● KBX-30E-BT-$^{M}_{L}$

(Top mounted motor, medium slider/long slider, motor capacity 100 W)

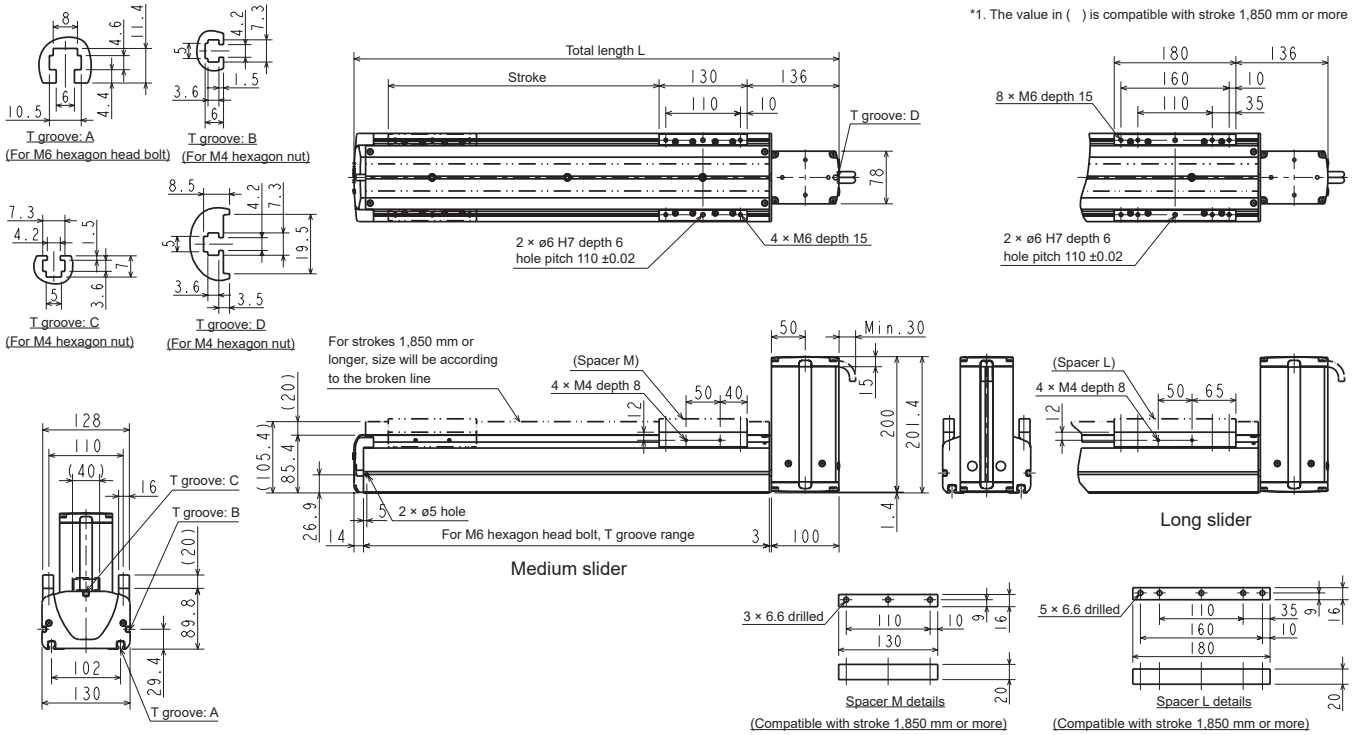

● KBX-30E-BR-$^{M}_{L}$

(Right mounted motor, medium slider/long slider, motor capacity 100 W)

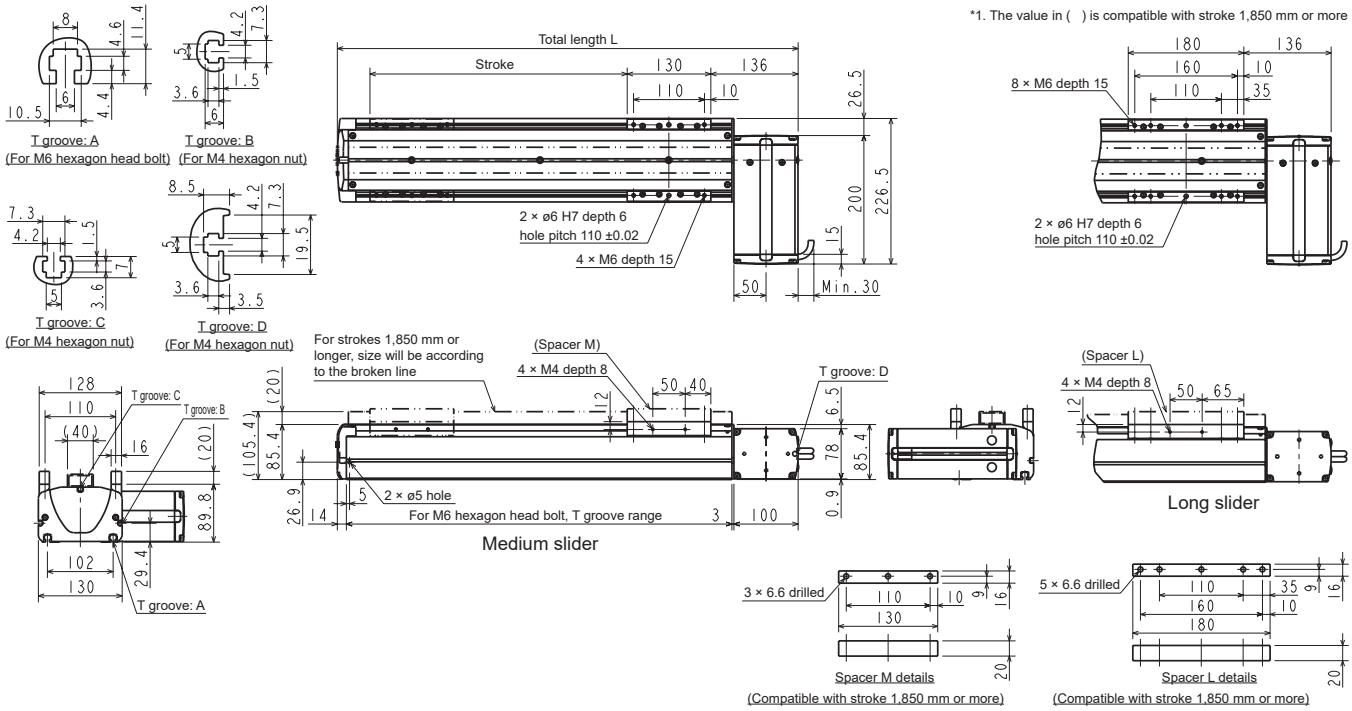

● Medium slider

Stroke (mm)	100	200	300	400	500	600	700	800	900	1000	1100	1200	1300	1400	1500	1600	1700	1800	1900	2000	2100	2200	2300	2400	2500	2600	2700	2800	2900	3000	3100	3200
Stroke code	10	20	30	40	50	60	70	80	90	A0	B0	C0	D0	E0	F0	G0	H0	J0	K0	L0	M0	N0	P0	Q0	R0	S0	T0	U0	V0	W00	W10	W20
Total length L (mm)	417	517	617	717	817	917	1017	1117	1217	1317	1417	1517	1617	1717	1817	1917	2017	2117	2217	2317	2417	2517	2617	2717	2817	2917	3017	3117	3217	3317	3417	3517
Body weight (kg)	9.2	10.2	11.2	12.2	13.2	14.1	15.1	16.1	17.1	18.1	19.1	20.1	21.1	22.1	23.0	24.0	25.0	26.0	28.3	29.3	30.4	31.4	32.5	33.5	34.6	35.6	36.7	37.7	38.8	39.8	40.9	41.9

● Long slider

Stroke (mm)	150	250	350	450	550	650	750	850	950	1050	1150	1250	1350	1450	1550	1650	1750	1850	1950	2050	2150	2250	2350	2450	2550	2650	2750	2850	2950	3050	3150
Stroke code	15	25	35	45	55	65	75	85	95	A5	B5	C5	D5	E5	F5	G5	H5	J5	K5	L5	M5	N5	P5	Q5	R5	S5	T5	U5	V5	W05	W15
Total length L (mm)	517	617	717	817	917	1017	1117	1217	1317	1417	1517	1617	1717	1817	1917	2017	2117	2217	2317	2417	2517	2617	2717	2817	2917	3017	3117	3217	3317	3417	3517
Body weight (kg)	10.5	11.5	12.5	13.5	14.4	15.4	16.4	17.4	18.4	19.4	20.4	21.4	22.4	23.3	24.3	25.3	26.3	28.6	29.6	30.7	31.7	32.8	33.8	34.9	35.9	37.0	38.0	39.1	40.1	41.2	42.2

Dimensions

● KBX-30E-BL-$^{M}_{L}$

(Left mounted motor, medium slider/long slider, motor capacity 100 W)

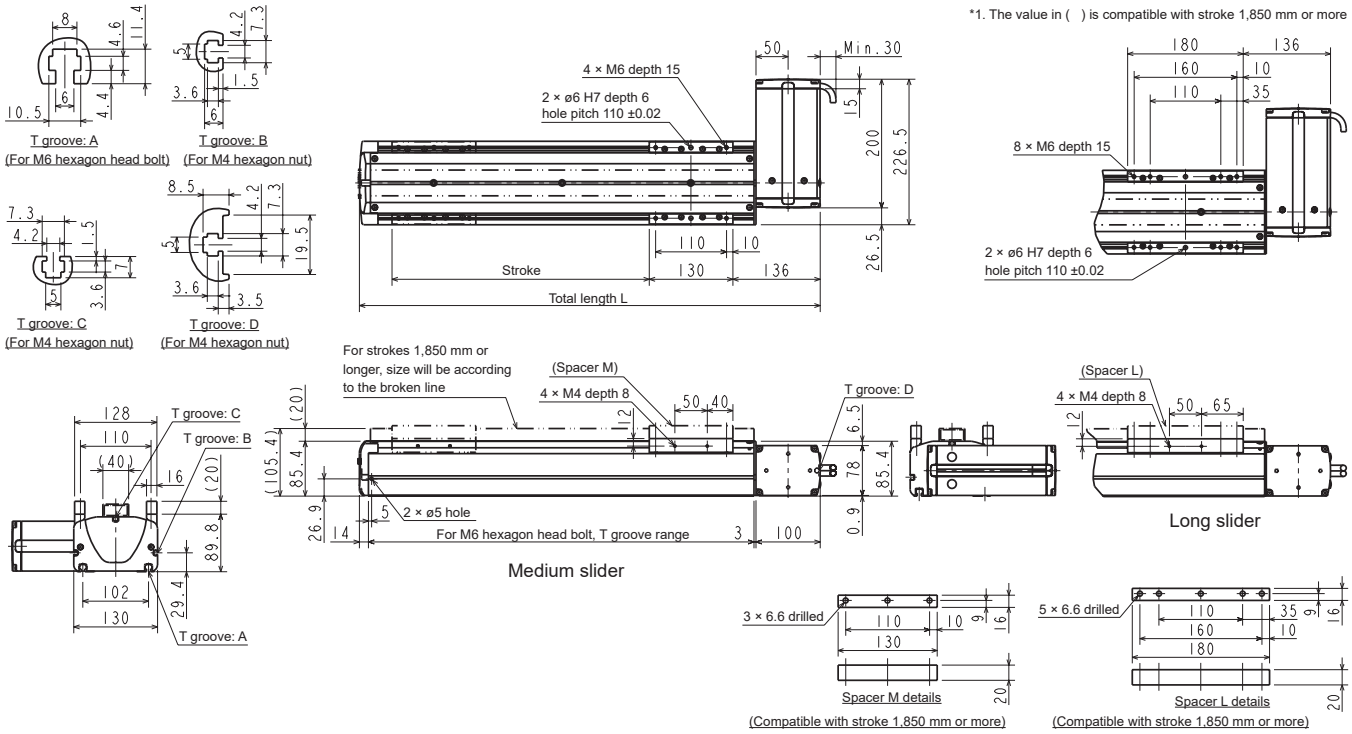

● KBX-30E-BU-$^{M}_{L}$

(Bottom mounted motor, medium slider/long slider, motor capacity 100 W)

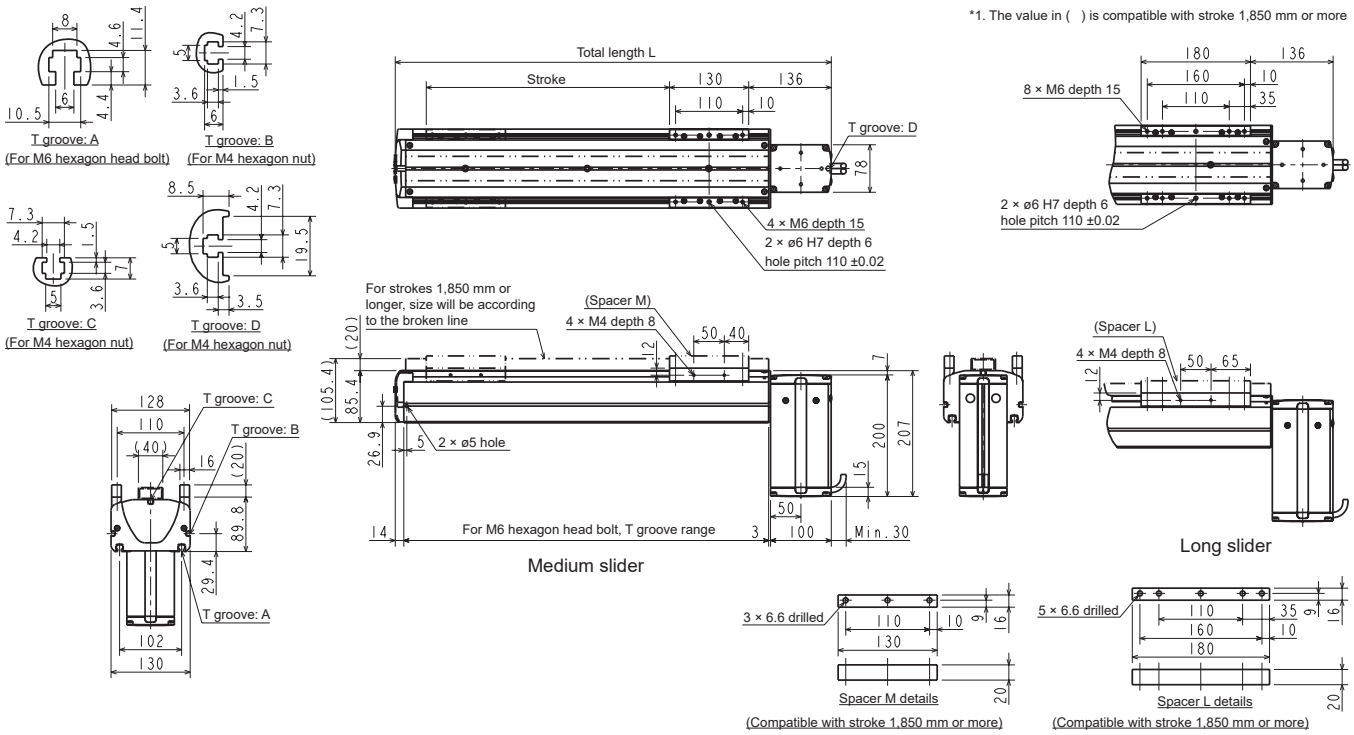

● Medium slider

Stroke (mm)	100	200	300	400	500	600	700	800	900	1000	1100	1200	1300	1400	1500	1600	1700	1800	1900	2000	2100	2200	2300	2400	2500	2600	2700	2800	2900	3000	3100	3200
Stroke code	10	20	30	40	50	60	70	80	90	A0	B0	C0	D0	E0	F0	G0	H0	J0	K0	L0	M0	N0	P0	Q0	R0	S0	T0	U0	V0	W00	W10	W20
Total length L (mm)	417	517	617	717	817	917	1017	1117	1217	1317	1417	1517	1617	1717	1817	1917	2017	2117	2217	2317	2417	2517	2617	2717	2817	2917	3017	3117	3217	3317	3417	3517
Body weight (kg)	9.2	10.2	11.2	12.2	13.2	14.1	15.1	16.1	17.1	18.1	19.1	20.1	21.1	22.1	23.0	24.0	25.0	26.0	28.3	29.3	30.4	31.4	32.5	33.5	34.6	35.6	36.7	37.7	38.8	39.8	40.9	41.9

● Long slider

Stroke (mm)	150	250	350	450	550	650	750	850	950	1050	1150	1250	1350	1450	1550	1650	1750	1850	1950	2050	2150	2250	2350	2450	2550	2650	2750	2850	2950	3050	3150
Stroke code	15	25	35	45	55	65	75	85	95	A5	B5	C5	D5	E5	F5	G5	H5	J5	K5	L5	M5	N5	P5	Q5	R5	S5	T5	U5	V5	W05	W15
Total length L (mm)	517	617	717	817	917	1017	1117	1217	1317	1417	1517	1617	1717	1817	1917	2017	2117	2217	2317	2417	2517	2617	2717	2817	2917	3017	3117	3217	3317	3417	3517
Body weight (kg)	10.5	11.5	12.5	13.5	14.4	15.4	16.4	17.4	18.4	19.4	20.4	21.4	22.4	23.3	24.3	25.3	26.3	28.6	29.6	30.7	31.7	32.8	33.8	34.9	35.9	37.0	38.0	39.1	40.1	41.2	42.2

Dimensions

● KBX-30F-BT-$^{M}_{L}$

(Top mounted motor, medium slider/long slider, motor capacity 200 W)

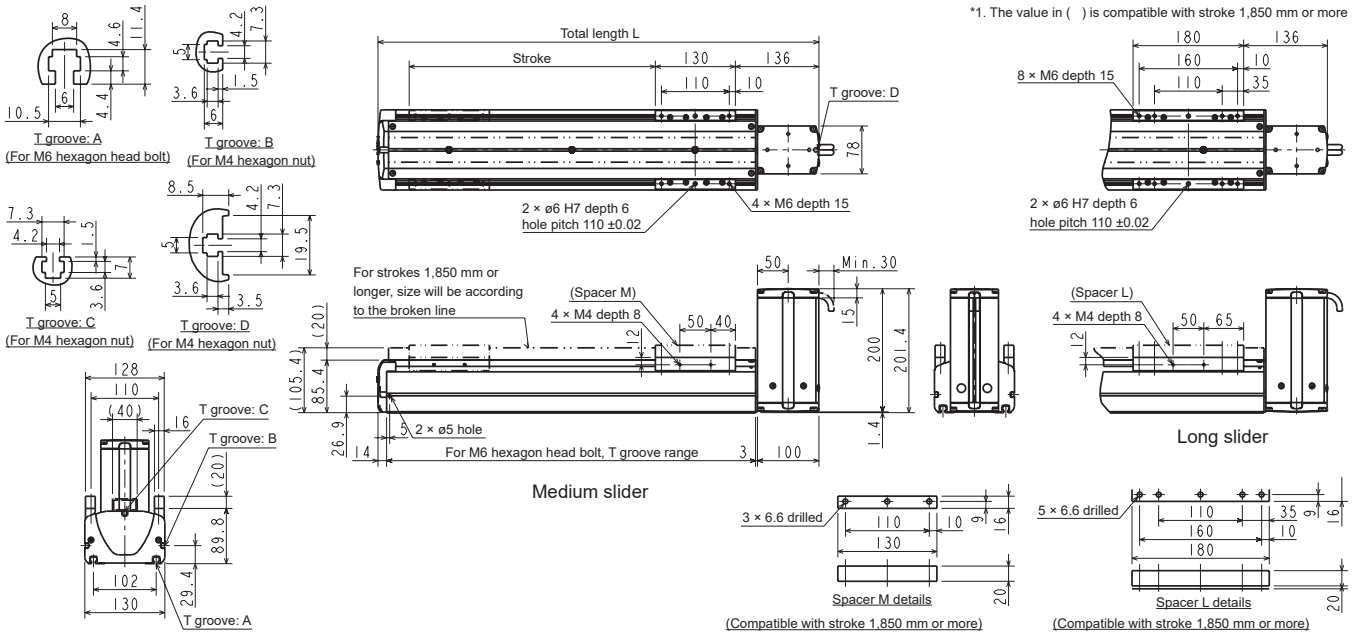

● KBX-30F-BR-$^{M}_{L}$

(Right mounted motor, medium slider/long slider, motor capacity 200 W)

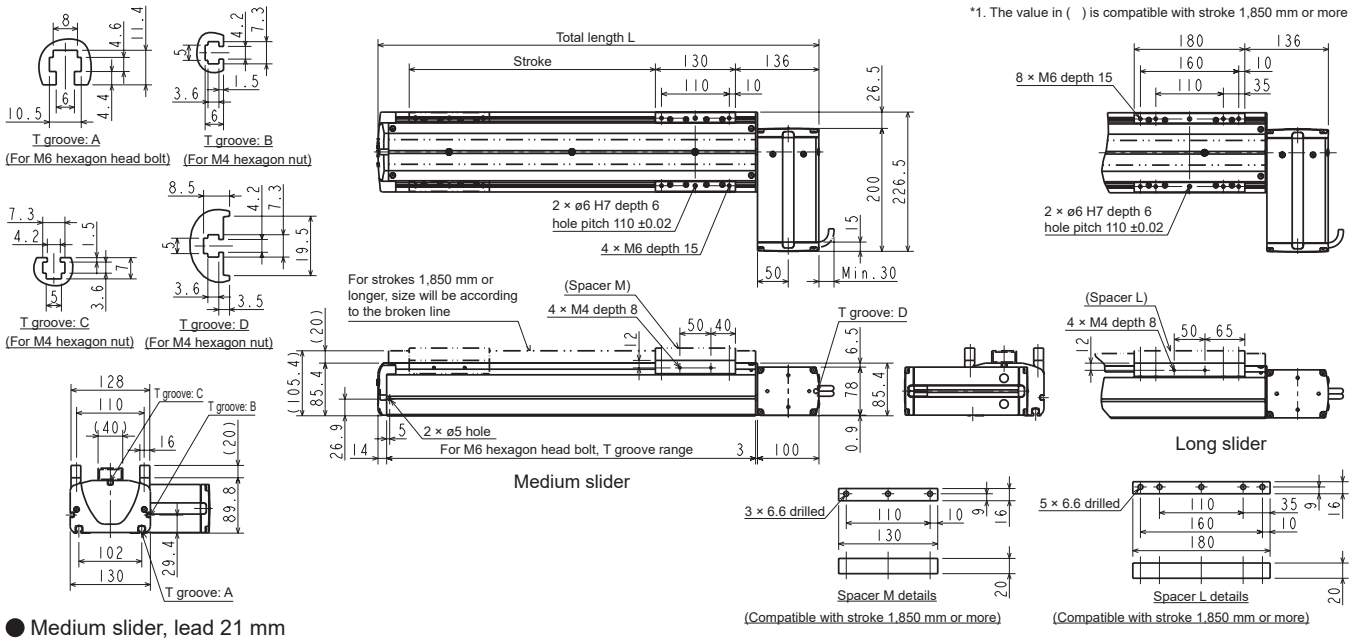

● Medium slider, lead 21 mm

Stroke (mm)	100	200	300	400	500	600	700	800	900	1000	1100	1200	1300	1400	1500	1600	1700	1800	1900	2000	2100	2200	2300	2400	2500	2600	2700	2800	2900	3000	3100	3200
Stroke code	10	20	30	40	50	60	70	80	90	A0	B0	C0	D0	E0	F0	G0	H0	J0	K0	L0	M0	N0	P0	Q0	R0	S0	T0	U0	V0	W00	W10	W20
Total length L (mm)	417	517	617	717	817	917	1017	1117	1217	1317	1417	1517	1617	1717	1817	1917	2017	2117	2217	2317	2417	2517	2617	2717	2817	2917	3017	3117	3217	3317	3417	3517
Body weight (kg)	9.8	10.8	11.8	12.8	13.8	14.7	15.7	16.7	17.7	18.7	19.7	20.7	21.7	22.7	23.6	24.6	25.6	26.6	28.9	29.9	31.0	32.0	33.1	34.1	35.2	36.2	37.2	38.2	39.3	40.3	41.4	42.4

● Long slider, lead 21 mm

Stroke (mm)	150	250	350	450	550	650	750	850	950	1050	1150	1250	1350	1450	1550	1650	1750	1850	1950	2050	2150	2250	2350	2450	2550	2650	2750	2850	2950	3050	3150
Stroke code	15	25	35	45	55	65	75	85	95	A5	B5	C5	D5	E5	F5	G5	H5	J5	K5	L5	M5	N5	P5	Q5	R5	S5	T5	U5	V5	W05	W15
Total length L (mm)	517	617	717	817	917	1017	1117	1217	1317	1417	1517	1617	1717	1817	1917	2017	2117	2217	2317	2417	2517	2617	2717	2817	2917	3017	3117	3217	3317	3417	3517
Body weight (kg)	11.1	12.1	13.1	14.1	15.0	16.0	17.0	18.0	19.0	20.0	21.0	22.0	23.0	23.9	24.9	25.9	26.9	29.2	30.2	31.3	32.3	33.4	34.4	35.5	36.5	37.6	38.6	39.7	40.7	41.8	42.8

● Medium slider, lead 42 mm

Stroke (mm)	100	200	300	400	500	600	700	800	900	1000	1100	1200	1300	1400	1500	1600	1700	1800	1900	2000	2100	2200	2300	2400	2500	2600	2700	2800	2900	3000	3100	3200
Stroke code	10	20	30	40	50	60	70	80	90	A0	B0	C0	D0	E0	F0	G0	H0	J0	K0	L0	M0	N0	P0	Q0	R0	S0	T0	U0	V0	W00	W10	W20
Total length L (mm)	417	517	617	717	817	917	1017	1117	1217	1317	1417	1517	1617	1717	1817	1917	2017	2117	2217	2317	2417	2517	2617	2717	2817	2917	3017	3117	3217	3317	3417	3517
Body weight (kg)	9.2	10.2	11.2	12.2	13.2	14.1	15.1	16.1	17.1	18.1	19.1	20.1	21.1	22.1	23.0	24.0	25.0	26.0	28.3	29.3	30.4	31.4	32.5	33.5	34.6	35.6	36.7	37.7	38.8	39.8	40.9	41.9

● Long slider, lead 42 mm

Stroke (mm)	150	250	350	450	550	650	750	850	950	1050	1150	1250	1350	1450	1550	1650	1750	1850	1950	2050	2150	2250	2350	2450	2550	2650	2750	2850	2950	3050	3150
Stroke code	15	25	35	45	55	65	75	85	95	A5	B5	C5	D5	E5	F5	G5	H5	J5	K5	L5	M5	N5	P5	Q5	R5	S5	T5	U5	V5	W05	W15
Total length L (mm)	517	617	717	817	917	1017	1117	1217	1317	1417	1517	1617	1717	1817	1917	2017	2117	2217	2317	2417	2517	2617	2717	2817	2917	3017	3117	3217	3317	3417	3517
Body weight (kg)	10.5	11.5	12.5	13.5	14.4	15.4	16.4	17.4	18.4	19.4	20.4	21.4	22.4	23.3	24.3	25.3	26.3	28.6	29.6	30.7	31.7	32.8	33.8	34.9	35.9	37.0	38.0	39.1	40.1	41.2	42.2

Dimensions

● KBX-30F-BL-$^{M}_{L}$

(Left mounted motor, medium slider/long slider, motor capacity 200 W)

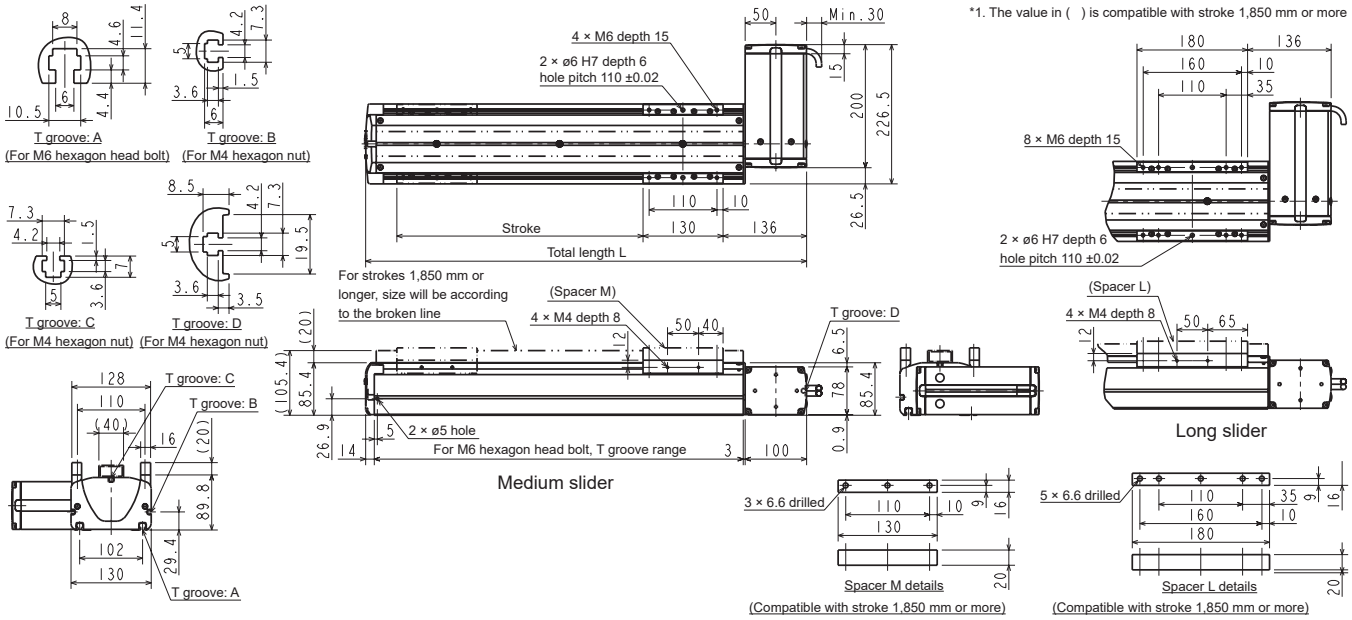

● KBX-30F-BU-$^{M}_{L}$

(Bottom mounted motor, medium slider/long slider, motor capacity 200 W)

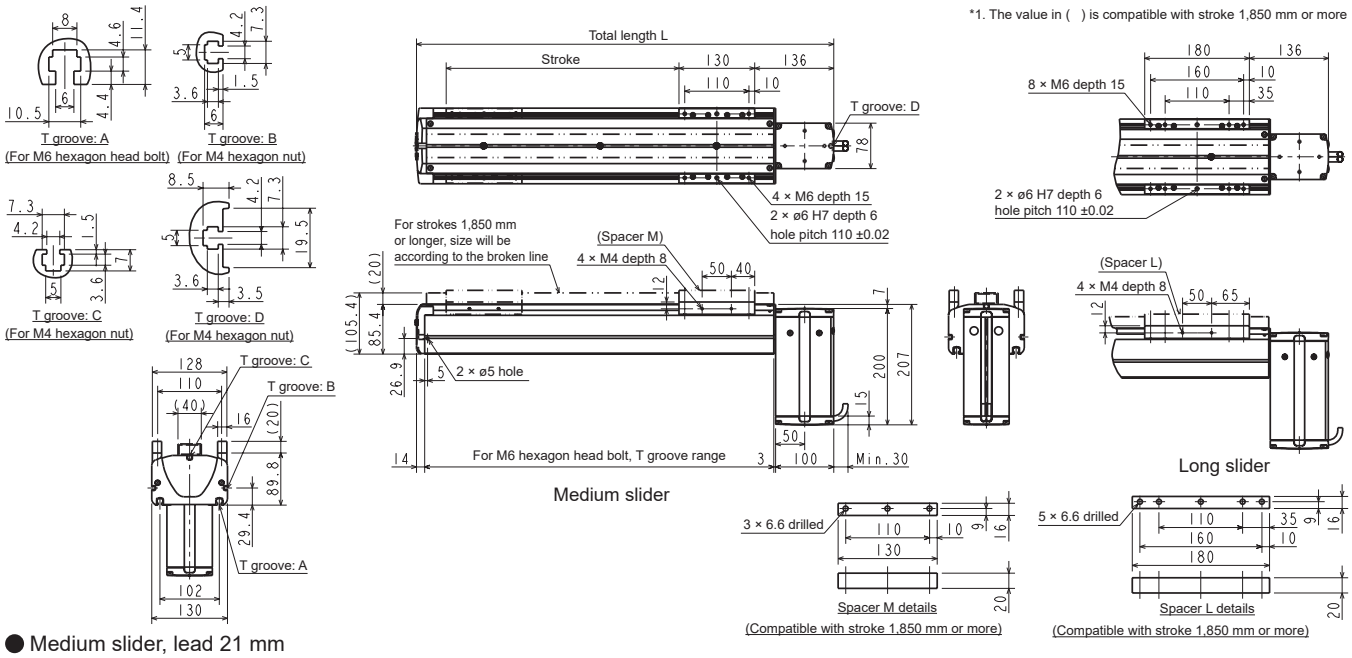

● Medium slider, lead 21 mm

Stroke (mm)	100	200	300	400	500	600	700	800	900	1000	1100	1200	1300	1400	1500	1600	1700	1800	1900	2000	2100	2200	2300	2400	2500	2600	2700	2800	2900	3000	3100	3200
Stroke code	10	20	30	40	50	60	70	80	90	A0	B0	C0	D0	E0	F0	G0	H0	J0	K0	L0	M0	N0	P0	Q0	R0	S0	T0	U0	V0	W00	W10	W20
Total length L (mm)	417	517	617	717	817	917	1017	1117	1217	1317	1417	1517	1617	1717	1817	1917	2017	2117	2217	2317	2417	2517	2617	2717	2817	2917	3017	3117	3217	3317	3417	3517
Body weight (kg)	9.8	10.8	11.8	12.8	13.8	14.7	15.7	16.7	17.7	18.7	19.7	20.7	21.7	22.7	23.6	24.6	25.6	26.6	28.9	29.9	31.0	32.0	33.1	34.1	35.2	36.2	37.2	38.2	39.3	40.3	41.4	42.4

● Long slider, lead 21 mm

Stroke (mm)	150	250	350	450	550	650	750	850	950	1050	1150	1250	1350	1450	1550	1650	1750	1850	1950	2050	2150	2250	2350	2450	2550	2650	2750	2850	2950	3050	3150
Stroke code	15	25	35	45	55	65	75	85	95	A5	B5	C5	D5	E5	F5	G5	H5	J5	K5	L5	M5	N5	P5	Q5	R5	S5	T5	U5	V5	W05	W15
Total length L (mm)	517	617	717	817	917	1017	1117	1217	1317	1417	1517	1617	1717	1817	1917	2017	2117	2217	2317	2417	2517	2617	2717	2817	2917	3017	3117	3217	3317	3417	3517
Body weight (kg)	11.1	12.1	13.1	14.1	15.0	16.0	17.0	18.0	19.0	20.0	21.0	22.0	23.0	23.9	24.9	25.9	26.9	29.2	30.2	31.3	32.3	33.4	34.4	35.5	36.5	37.6	38.6	39.7	40.7	41.8	42.8

● Medium slider, lead 42 mm

Stroke (mm)	100	200	300	400	500	600	700	800	900	1000	1100	1200	1300	1400	1500	1600	1700	1800	1900	2000	2100	2200	2300	2400	2500	2600	2700	2800	2900	3000	3100	3200
Stroke code	10	20	30	40	50	60	70	80	90	A0	B0	C0	D0	E0	F0	G0	H0	J0	K0	L0	M0	N0	P0	Q0	R0	S0	T0	U0	V0	W00	W10	W20
Total length L (mm)	417	517	617	717	817	917	1017	1117	1217	1317	1417	1517	1617	1717	1817	1917	2017	2117	2217	2317	2417	2517	2617	2717	2817	2917	3017	3117	3217	3317	3417	3517
Body weight (kg)	9.2	10.2	11.2	12.2	13.2	14.1	15.1	16.1	17.1	18.1	19.1	20.1	21.1	22.1	23.0	24.0	25.0	26.0	28.3	29.3	30.4	31.4	32.5	33.5	34.6	35.6	36.7	37.7	38.8	39.8	40.9	41.9

● Long slider, lead 42 mm

Stroke (mm)	150	250	350	450	550	650	750	850	950	1050	1150	1250	1350	1450	1550	1650	1750	1850	1950	2050	2150	2250	2350	2450	2550	2650	2750	2850	2950	3050	3150
Stroke code	15	25	35	45	55	65	75	85	95	A5	B5	C5	D5	E5	F5	G5	H5	J5	K5	L5	M5	N5	P5	Q5	R5	S5	T5	U5	V5	W05	W15
Total length L (mm)	517	617	717	817	917	1017	1117	1217	1317	1417	1517	1617	1717	1817	1917	2017	2117	2217	2317	2417	2517	2617	2717	2817	2917	3017	3117	3217	3317	3417	3517
Body weight (kg)	10.5	11.5	12.5	13.5	14.4	15.4	16.4	17.4	18.4	19.4	20.4	21.4	22.4	23.3	24.3	25.3	26.3	28.6	29.6	30.7	31.7	32.8	33.8	34.9	35.9	37.0	38.0	39.1	40.1	41.2	42.2

Dimensions

● KBX-50F-BT-$^{M}_{L}$

(Top mounted motor, medium slider/long slider, motor capacity 200 W)

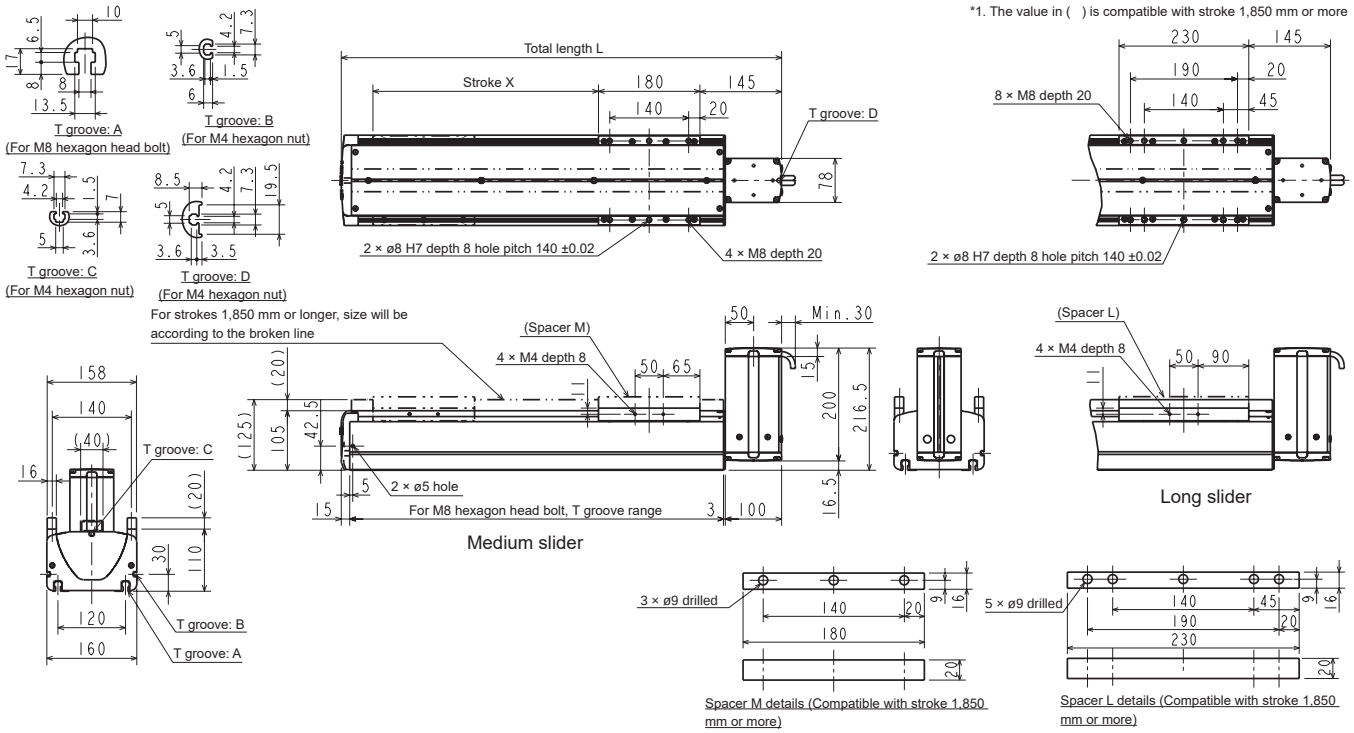

● KBX-50F-BR-$^{M}_{L}$

(Right mounted motor, medium slider/long slider, motor capacity 200 W)

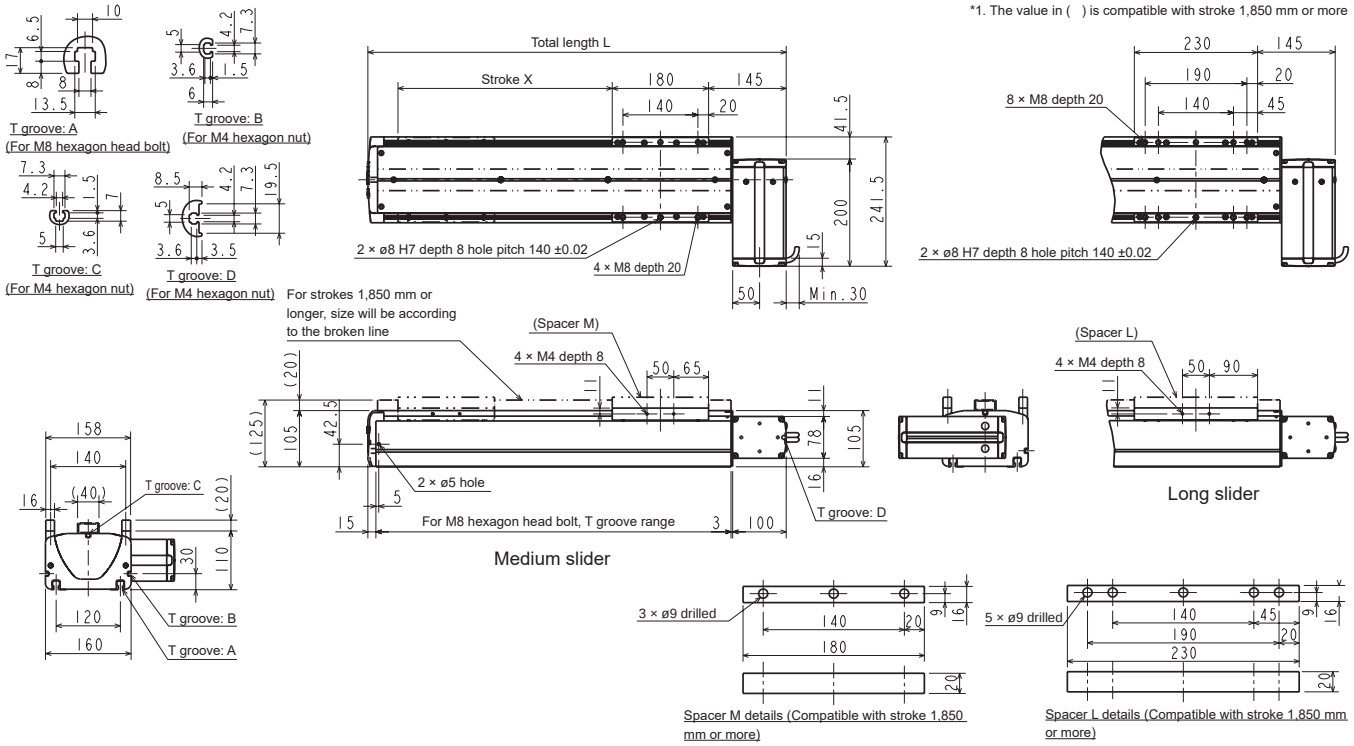

● Medium slider

Stroke (mm)	200	300	400	500	600	700	800	900	1000	1100	1200	1300	1400	1500	1600	1700	1800	1900	2000	2100	2200	2300	2400	2500	2600	2700	2800	2900	3000	3100	3200	3300	3400	3500
Stroke code	20	30	40	50	60	70	80	90	A0	B0	C0	D0	E0	F0	G0	H0	J0	K0	L0	M0	N0	P0	Q0	R0	S0	T0	U0	V0	W00	W10	W20	W30	W40	W50
Total length L (mm)	581	681	781	881	981	1081	1181	1281	1381	1481	1581	1681	1781	1881	1981	2081	2181	2281	2381	2481	2581	2681	2781	2881	2981	3081	3181	3281	3381	3481	3581	3681	3781	3881
Body weight (kg)	15.0	16.5	18.0	19.5	21.0	22.5	24.0	25.5	27.0	28.5	30.0	31.5	33.0	34.5	36.0	37.5	39.0	41.8	43.4	44.9	46.5	48.1	49.6	51.2	52.7	54.3	55.9	57.4	59.0	60.6	62.1	63.7	65.2	66.8

● Long slider

Stroke (mm)	250	350	450	550	650	750	850	950	1050	1150	1250	1350	1450	1550	1650	1750	1850	1950	2050	2150	2250	2350	2450	2550	2650	2750	2850	2950	3050	3150	3250	3350	3450
Stroke code	25	35	45	55	65	75	85	95	A5	B5	C5	D5	E5	F5	G5	H5	J5	K5	L5	M5	N5	P5	Q5	R5	S5	T5	U5	V5	W05	W15	W25	W35	W45
Total length L (mm)	681	781	881	981	1081	1181	1281	1381	1481	1581	1681	1781	1881	1981	2081	2181	2281	2381	2481	2581	2681	2781	2881	2981	3081	3181	3281	3381	3481	3581	3681	3781	3881
Body weight (kg)	17.1	18.6	20.1	21.6	23.1	24.6	26.1	27.6	29.1	30.6	32.1	33.6	35.1	36.6	38.1	39.6	42.4	44.0	45.5	47.1	48.4	50.2	51.8	53.3	54.9	56.5	58.0	59.6	61.2	62.7	64.3	65.8	67.4

Dimensions

● KBX-50F-BL-$^{M}_{L}$

(Left mounted motor, medium slider/long slider, motor capacity 200 W)

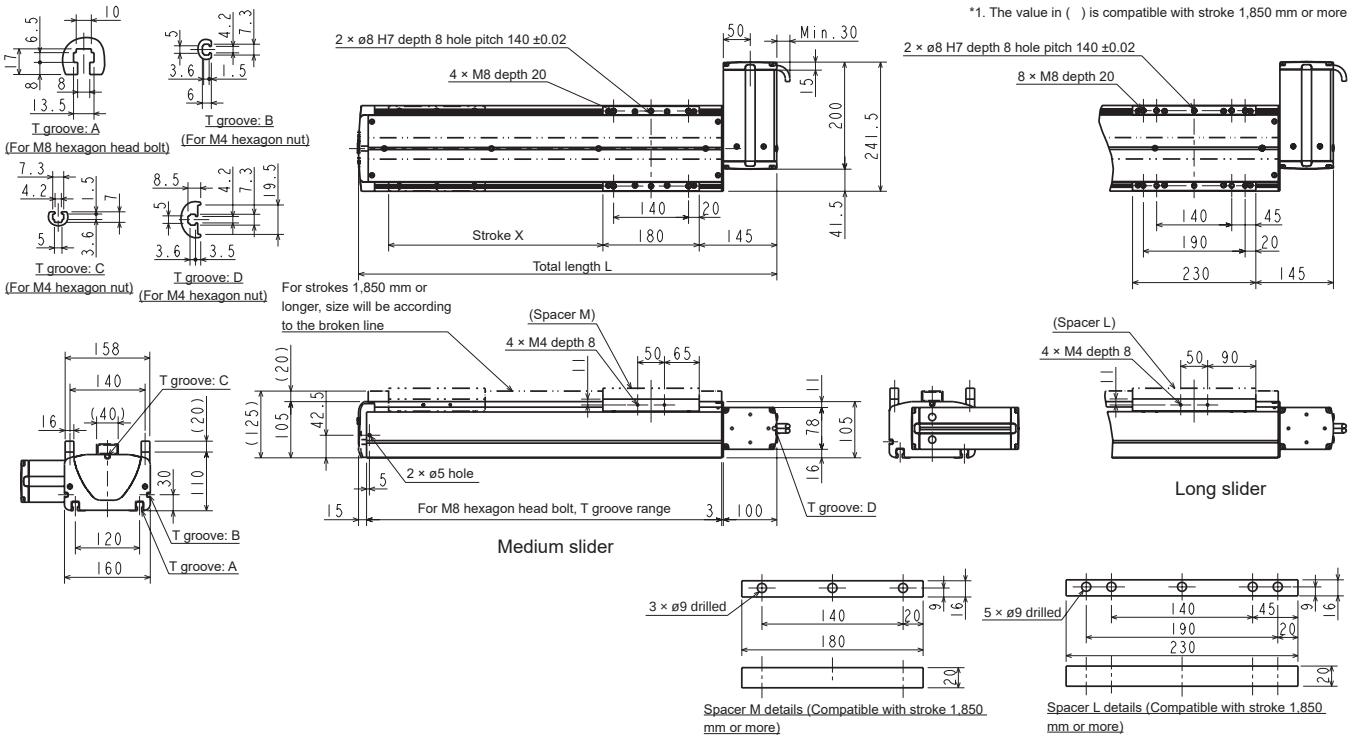

● KBX-50F-BU-$^{M}_{L}$

(Bottom mounted motor, medium slider/long slider, motor capacity 200 W)

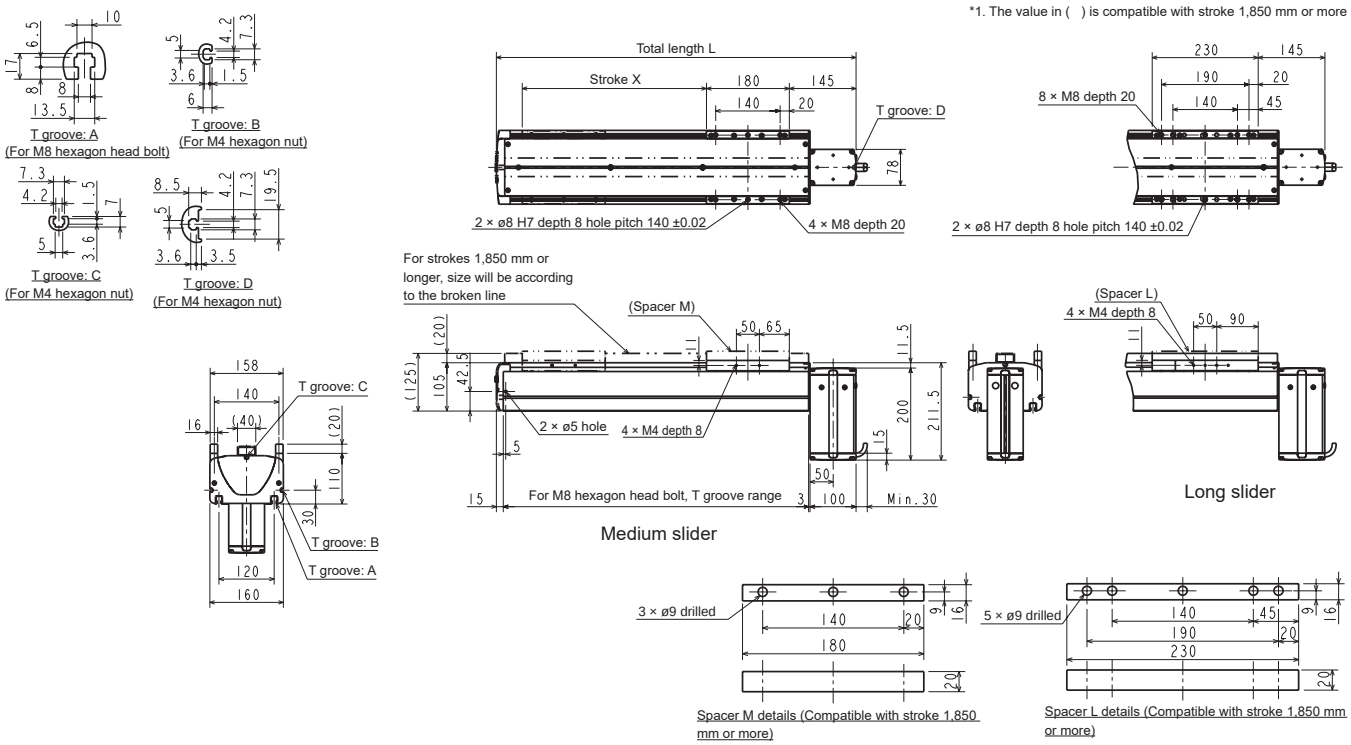

● Medium slider

Stroke (mm)	200	300	400	500	600	700	800	900	1000	1100	1200	1300	1400	1500	1600	1700	1800	1900	2000	2100	2200	2300	2400	2500	2600	2700	2800	2900	3000	3100	3200	3300	3400	3500
Stroke code	20	30	40	50	60	70	80	90	A0	B0	C0	D0	E0	F0	G0	H0	J0	K0	L0	M0	N0	P0	Q0	R0	S0	T0	U0	V0	W00	W10	W20	W30	W40	W50
Total length L (mm)	581	681	781	881	981	1081	1181	1281	1381	1481	1581	1681	1781	1881	1981	2081	2181	2281	2381	2481	2581	2681	2781	2881	2981	3081	3181	3281	3381	3481	3581	3681	3781	3881
Body weight (kg)	15.0	16.5	18.0	19.5	21.0	22.5	24.0	25.5	27.0	28.5	30.0	31.5	33.0	34.5	36.0	37.5	39.0	41.8	43.4	44.9	46.5	48.1	49.6	51.2	52.7	54.3	55.9	57.4	59.0	60.6	62.1	63.7	65.2	66.8

● Long slider

Stroke (mm)	250	350	450	550	650	750	850	950	1050	1150	1250	1350	1450	1550	1650	1750	1850	1950	2050	2150	2250	2350	2450	2550	2650	2750	2850	2950	3050	3150	3250	3350	3450
Stroke code	25	35	45	55	65	75	85	95	A5	B5	C5	D5	E5	F5	G5	H5	J5	K5	L5	M5	N5	P5	Q5	R5	S5	T5	U5	V5	W05	W15	W25	W35	W45
Total length L (mm)	681	781	881	981	1081	1181	1281	1381	1481	1581	1681	1781	1881	1981	2081	2181	2281	2381	2481	2581	2681	2781	2881	2981	3081	3181	3281	3381	3481	3581	3681	3781	3881
Body weight (kg)	17.1	18.6	20.1	21.6	23.1	24.6	26.1	27.6	29.1	30.6	32.1	33.6	35.1	36.6	38.1	39.6	42.4	44.0	45.5	47.1	48.4	50.2	51.8	53.3	54.9	56.5	58.0	59.6	61.2	62.7	64.3	65.8	67.4

Dimensions

● KBX-50G-BT-$^{M}_{L}$-42

(Top mounted motor, medium slider/long slider, motor capacity 400 W)

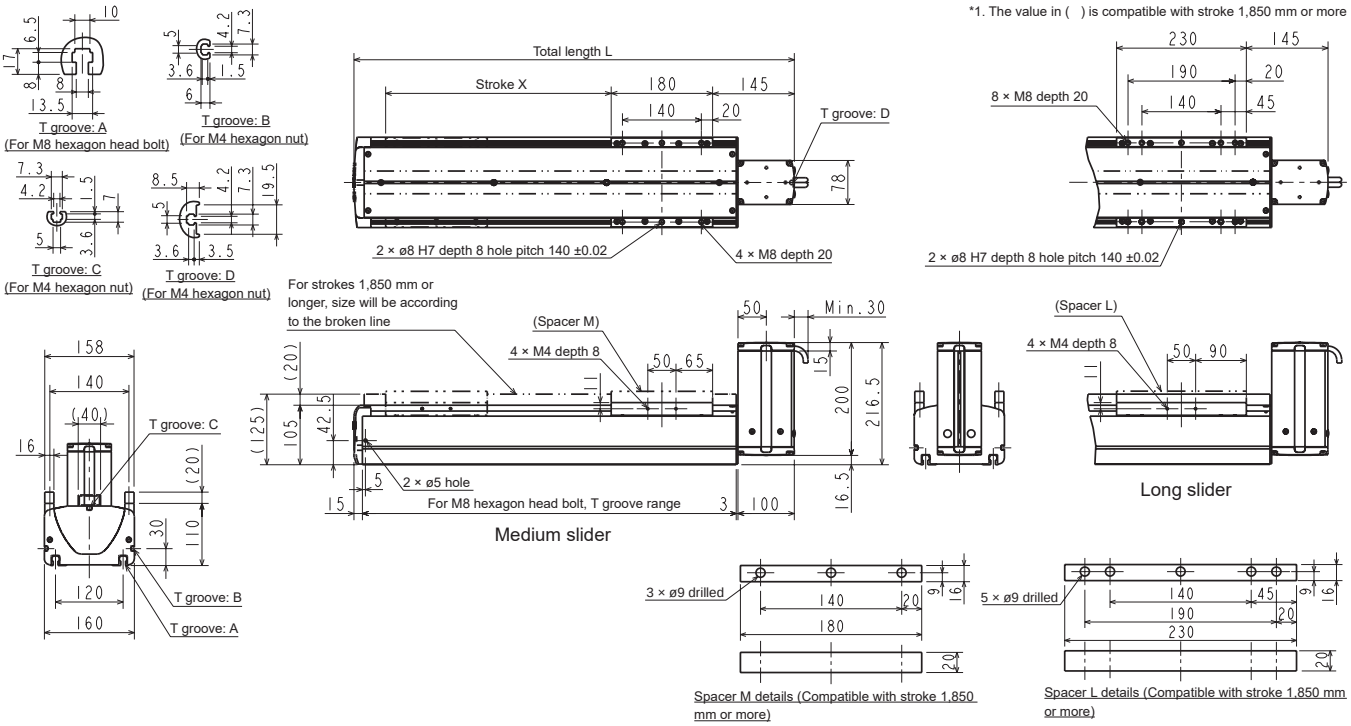

● KBX-50G-BR-$^{M}_{L}$-42

(Right mounted motor, medium slider/long slider, motor capacity 400 W)

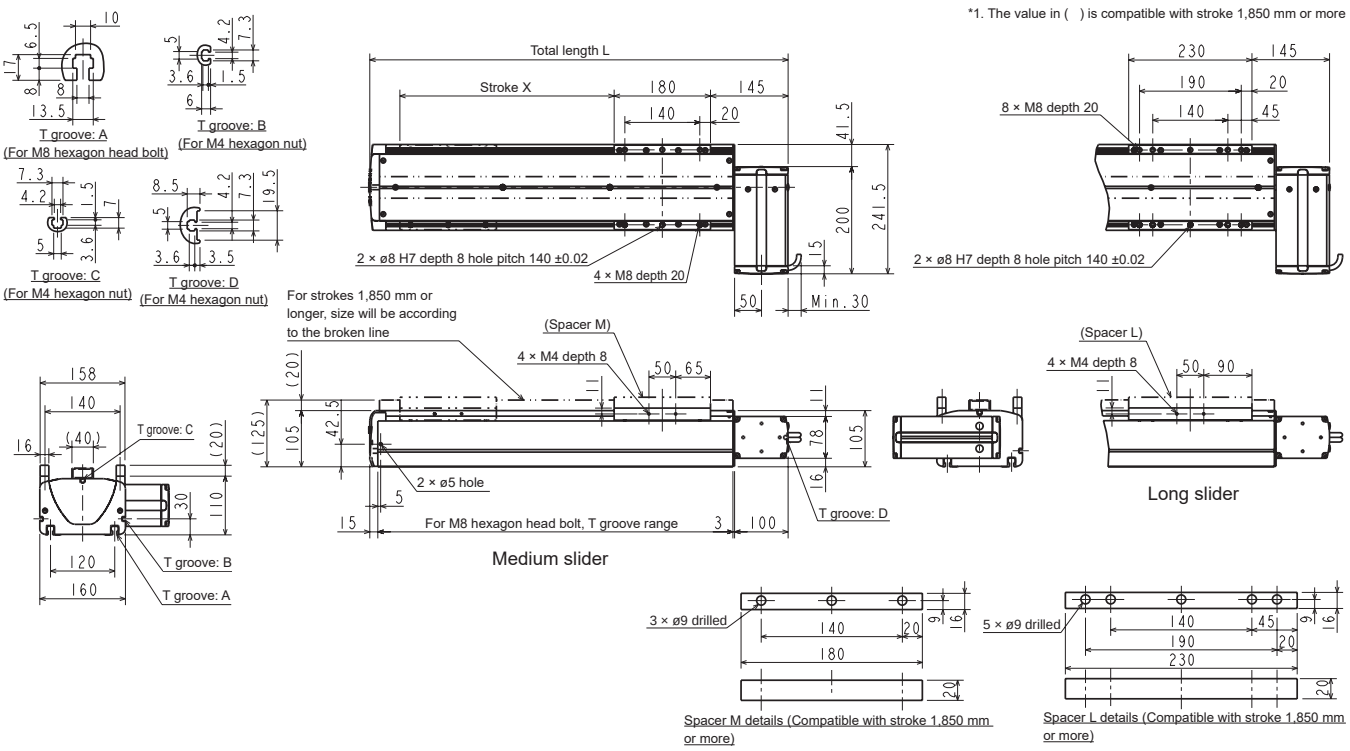

● Medium slider

Stroke (mm)	200	300	400	500	600	700	800	900	1000	1100	1200	1300	1400	1500	1600	1700	1800	1900	2000	2100	2200	2300	2400	2500	2600	2700	2800	2900	3000	3100	3200	3300	3400	3500
Stroke code	20	30	40	50	60	70	80	90	A0	B0	C0	D0	E0	F0	G0	H0	J0	K0	L0	M0	N0	P0	Q0	R0	S0	T0	U0	V0	W00	W10	W20	W30	W40	W50
Total length L (mm)	581	681	781	881	981	1081	1181	1281	1381	1481	1581	1681	1781	1881	1981	2081	2181	2281	2381	2481	2581	2681	2781	2881	2981	3081	3181	3281	3381	3481	3581	3681	3781	3881
Body weight (kg)	15.0	16.5	18.0	19.5	21.0	22.5	24.0	25.5	27.0	28.5	30.0	31.5	33.0	34.5	36.0	37.5	39.0	41.8	43.4	44.9	46.5	48.1	49.6	51.2	52.7	54.3	55.9	57.4	59.0	60.6	62.1	63.7	65.2	66.8

● Long slider

Stroke (mm)	250	350	450	550	650	750	850	950	1050	1150	1250	1350	1450	1550	1650	1750	1850	1950	2050	2150	2250	2350	2450	2550	2650	2750	2850	2950	3050	3150	3250	3350	3450
Stroke code	25	35	45	55	65	75	85	95	A5	B5	C5	D5	E5	F5	G5	H5	J5	K5	L5	M5	N5	P5	Q5	R5	S5	T5	U5	V5	W05	W15	W25	W35	W45
Total length L (mm)	681	781	881	981	1081	1181	1281	1381	1481	1581	1681	1781	1881	1981	2081	2181	2281	2381	2481	2581	2681	2781	2881	2981	3081	3181	3281	3381	3481	3581	3681	3781	3881
Body weight (kg)	17.1	18.6	20.1	21.6	23.1	24.6	26.1	27.6	29.1	30.6	32.1	33.6	35.1	36.6	38.1	39.6	42.4	44.0	45.5	47.1	48.4	50.2	51.8	53.3	54.9	56.5	58.0	59.6	61.2	62.7	64.3	65.8	67.4

Dimensions

● KBX-50G-BL-$^{M}_{L}$-42

(Left mounted motor, medium slider/long slider, motor capacity 400 W)

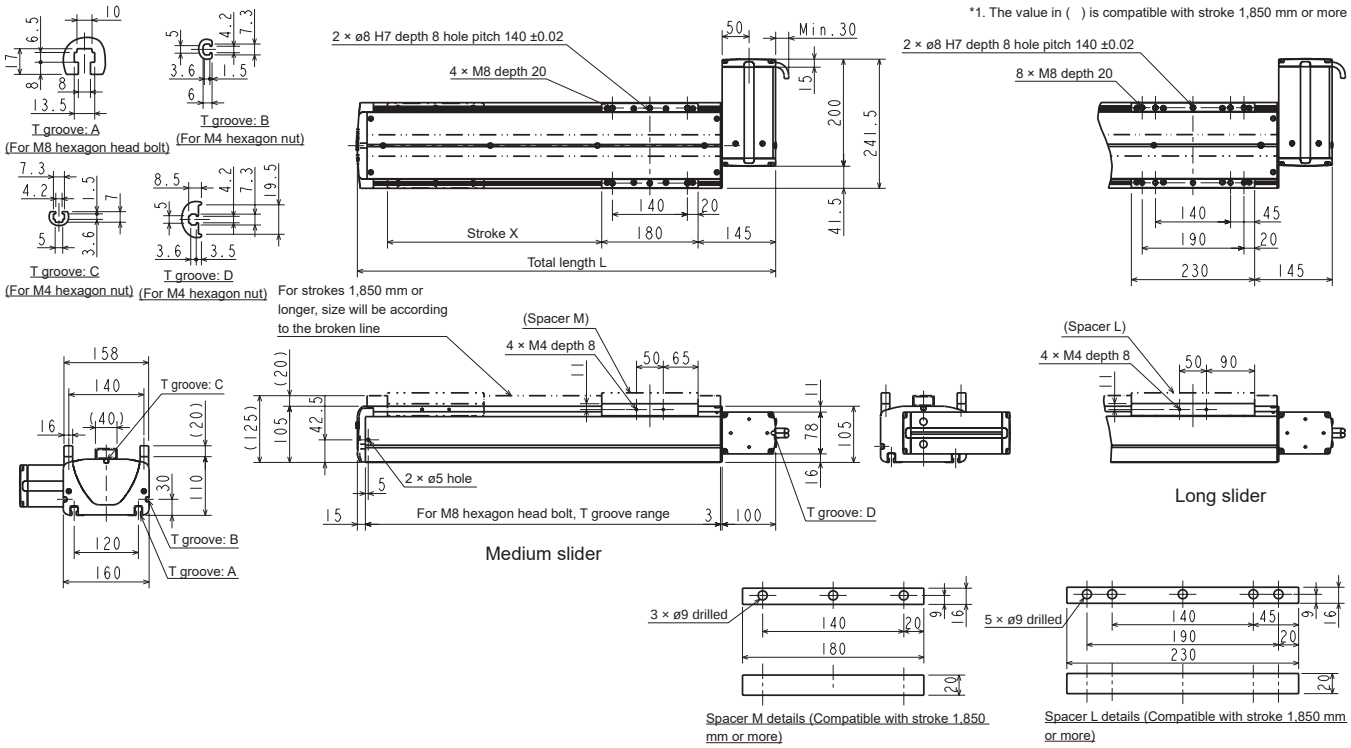

● KBX-50G-BU-$^{M}_{L}$-42

(Bottom mounted motor, medium slider/long slider, motor capacity 400 W)

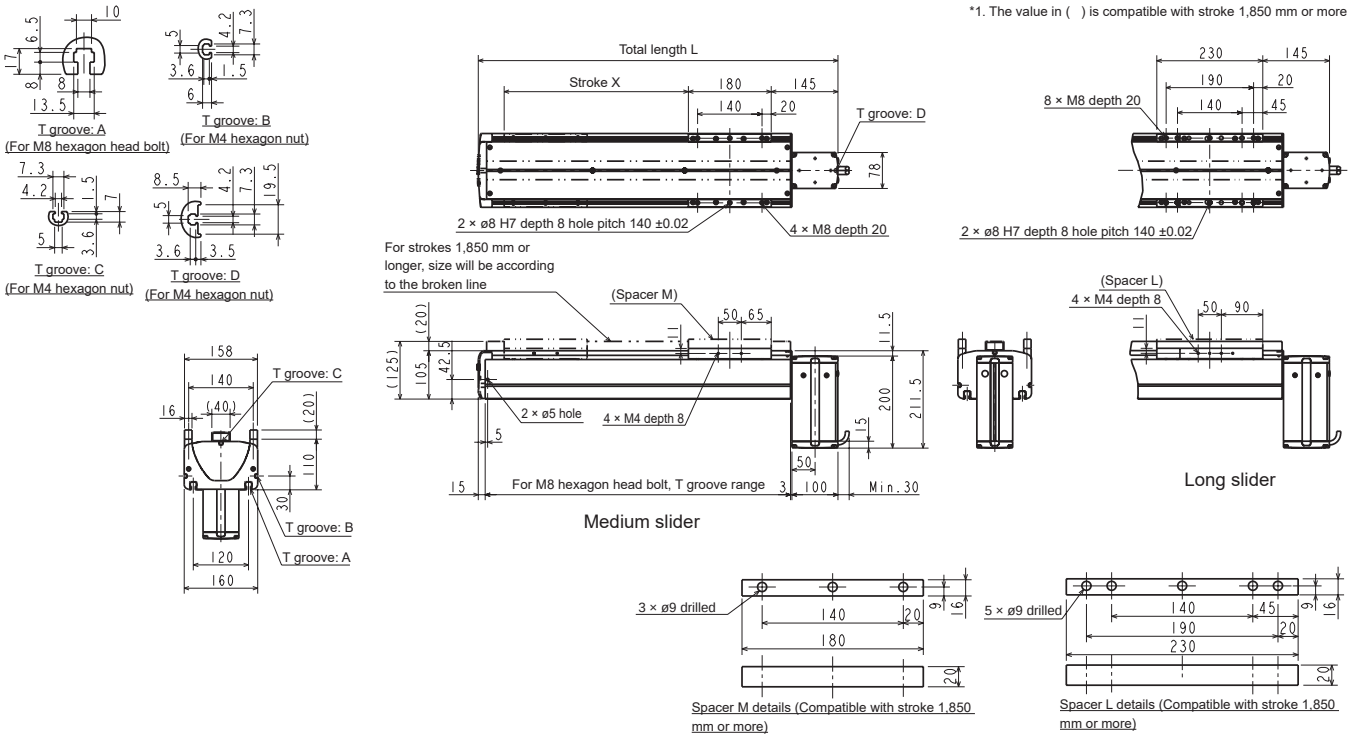

● Medium slider

Stroke (mm)	200	300	400	500	600	700	800	900	1000	1100	1200	1300	1400	1500	1600	1700	1800	1900	2000	2100	2200	2300	2400	2500	2600	2700	2800	2900	3000	3100	3200	3300	3400	3500
Stroke code	20	30	40	50	60	70	80	90	A0	B0	C0	D0	E0	F0	G0	H0	J0	K0	L0	M0	N0	P0	Q0	R0	S0	T0	U0	V0	W00	W10	W20	W30	W40	W50
Total length L (mm)	581	681	781	881	981	1081	1181	1281	1381	1481	1581	1681	1781	1881	1981	2081	2181	2281	2381	2481	2581	2681	2781	2881	2981	3081	3181	3281	3381	3481	3581	3681	3781	3881
Body weight (kg)	15.0	16.5	18.0	19.5	21.0	22.5	24.0	25.5	27.0	28.5	30.0	31.5	33.0	34.5	36.0	37.5	39.0	41.8	43.4	44.9	46.5	48.1	49.6	51.2	52.7	54.3	55.9	57.4	59.0	60.6	62.1	63.7	65.2	66.8

● Long slider

Stroke (mm)	250	350	450	550	650	750	850	950	1050	1150	1250	1350	1450	1550	1650	1750	1850	1950	2050	2150	2250	2350	2450	2550	2650	2750	2850	2950	3050	3150	3250	3350	3450
Stroke code	25	35	45	55	65	75	85	95	A5	B5	C5	D5	E5	F5	G5	H5	J5	K5	L5	M5	N5	P5	Q5	R5	S5	T5	U5	V5	W05	W15	W25	W35	W45
Total length L (mm)	681	781	881	981	1081	1181	1281	1381	1481	1581	1681	1781	1881	1981	2081	2181	2281	2381	2481	2581	2681	2781	2881	2981	3081	3181	3281	3381	3481	3581	3681	3781	3881
Body weight (kg)	17.1	18.6	20.1	21.6	23.1	24.6	26.1	27.6	29.1	30.6	32.1	33.6	35.1	36.6	38.1	39.6	42.4	44.0	45.5	47.1	48.4	50.2	51.8	53.3	54.9	56.5	58.0	59.6	61.2	62.7	64.3	65.8	67.4

Dimensions

●KBX-50G-BT-L19

(Top mounted motor, long slider, motor capacity 400W)

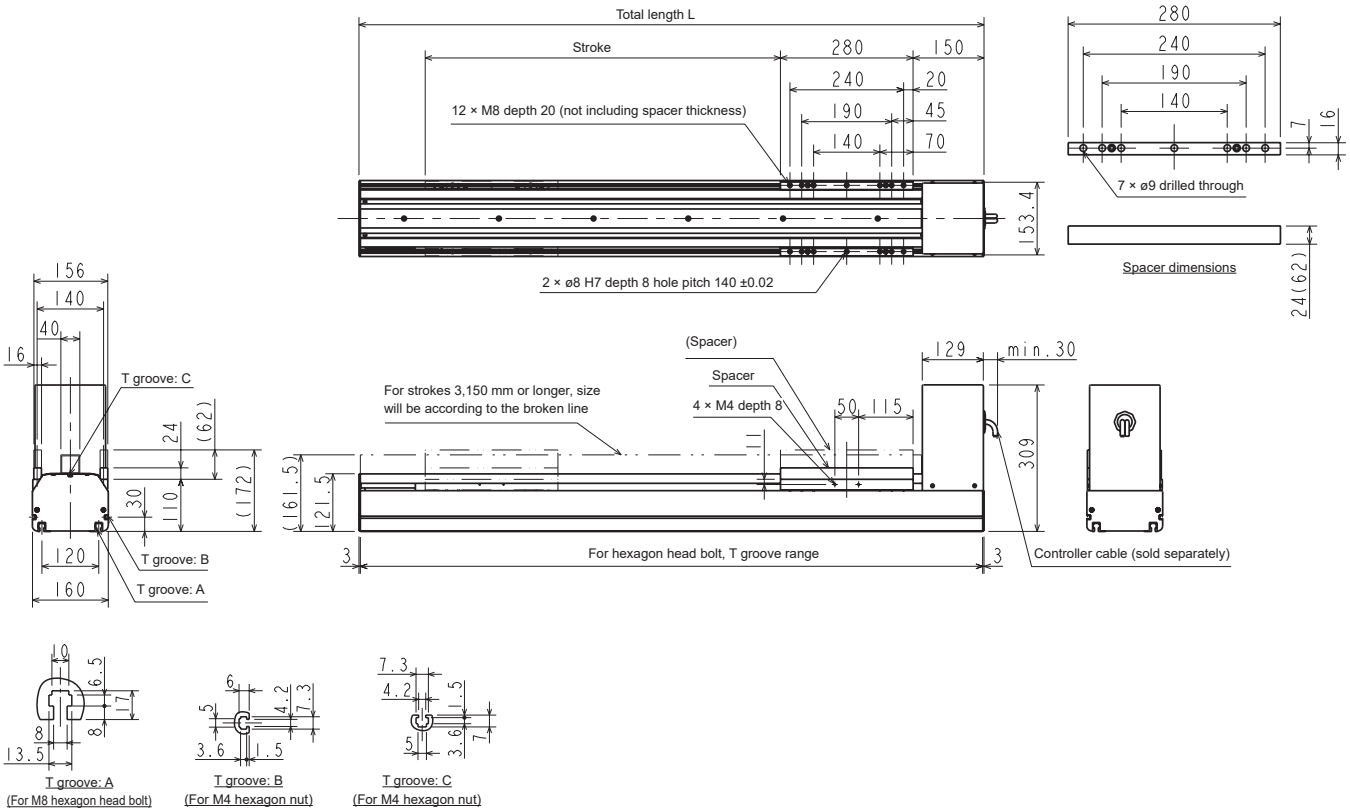

●Long slider

Stroke (mm)	150	250	350	450	550	650	750	850	950	1050
Stroke code	15	25	35	45	55	65	75	85	95	A5
Total length L (mm)	720	820	920	1020	1120	1220	1320	1420	1520	1620
Body weight (kg)	26.6	28.0	29.3	30.7	32.0	33.4	34.7	36.1	37.4	38.8

Stroke (mm)	1150	1250	1350	1450	1550	1650	1750	1850	1950	2050	2150	2250
Stroke code	B5	C5	D5	E5	F5	G5	H5	J5	K5	L5	M5	N5
Total length L (mm)	1720	1820	1920	2020	2120	2220	2320	2420	2520	2620	2720	2820
Body weight (kg)	40.2	41.5	42.9	44.2	45.6	46.9	48.3	49.6	51.0	52.3	53.7	55.0

Stroke (mm)	2350	2450	2550	2650	2750	2850	2950	3050	3150	3250
Stroke code	P5	Q5	R 5	S5	T5	U5	V5	W 05	W 15	W 25
Total length L (mm)	2920	3020	3120	3220	3320	3420	3520	3620	3720	3820
Body weight (kg)	56.4	57.7	59.1	60.4	61.8	63.1	64.5	65.9	67.2	68.6

Stroke (mm)	3350	3450	3550	3650	3750	3850	3950	4050	4150	4250	4350	4450
Stroke code	W 35	W 45	W 55	W 65	W 75	W 85	W 95	X05	X15	X25	X35	X45
Total length L (mm)	3920	4020	4120	4220	4320	4420	4520	4620	4720	4820	4920	5020
Body weight (kg)	69.9	71.3	72.6	74.0	75.3	76.7	78.0	79.1	80.7	82.1	83.4	84.8

Dimensions

●KBX-60J-BT-$^{M}_{L}$

(Top mounted motor, medium slider/long slider, motor size 750W)

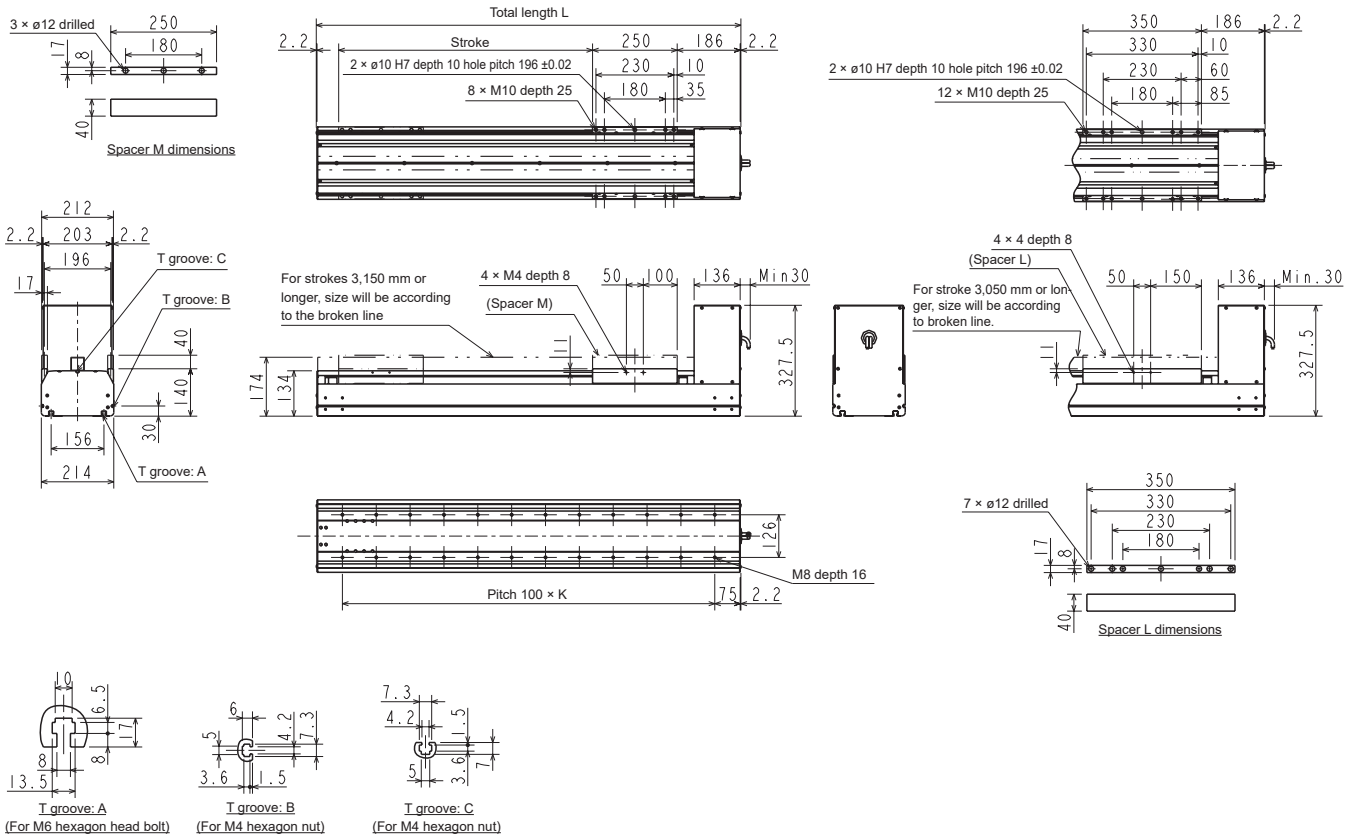

●Medium slider

Stroke (mm)	150	250	350	450	550	650	750	850	950	1050	1150	1250	1350	1450	1550	1650	1750	1850	1950	2050	2150	2250
Stroke code	15	25	35	45	55	65	75	85	95	A5	B5	C5	D5	E5	F5	G5	H5	J5	K5	L5	M5	N5
Total lengthL (mm)	650	750	850	950	1050	1150	1250	1350	1450	1550	1650	1750	1850	1950	2050	2150	2250	2350	2450	2550	2650	2750
K	5	6	7	8	9	10	11	12	13	14	15	16	17	18	19	20	21	22	23	24	25	26
Body weight (kg)	40.8	43.1	45.4	47.7	50.0	52.3	54.6	56.9	59.2	61.5	63.8	66.1	68.4	70.7	73.0	75.3	77.6	79.9	82.2	84.5	86.9	89.2

Stroke (mm)	2350	2450	2550	2650	2750	2850	2950	3050	3150	3250	3350	3450	3550	3650	3750	3850	3950	4050	4150	4250	4350	4450
Stroke code	P5	Q5	R 5	S5	T5	U5	V5	W 05	W 15	W 25	W 35	W 45	W 55	W 65	W 75	W 85	W 95	X05	X15	X25	X35	X45
Total lengthL (mm)	2850	2950	3050	3150	3250	3350	3450	3550	3650	3750	3850	3950	4050	4150	4250	4350	4450	4550	4650	4750	4850	4950
K	27	28	29	30	31	32	33	34	35	36	37	38	39	40	41	42	43	44	45	46	47	48
Body weight (kg)	91.5	93.8	96.1	98.4	100.7	103.0	105.3	107.6	109.9	112.2	114.5	116.8	119.1	121.4	123.7	126.0	128.3	130.6	132.9	135.2	137.6	139.9

●Long slider

Stroke (mm)	150	250	350	450	550	650	750	850	950	1050	1150	1250	1350	1450	1550	1650	1750	1850	1950	2050	2150	2250
Stroke code	15	25	35	45	55	65	75	85	95	A5	B5	C5	D5	E5	F5	G5	H5	J5	K5	L5	M5	N5
Total lengthL (mm)	750	850	950	1050	1150	1250	1350	1450	1550	1650	1750	1850	1950	2050	2150	2250	2350	2450	2550	2650	2750	2850
K	6	7	8	9	10	11	12	13	14	15	16	17	18	19	20	21	22	23	24	25	26	27
Body weight (kg)	44.1	46.4	48.7	51.0	53.3	55.6	57.9	60.2	62.5	64.8	67.1	69.4	71.7	74.0	76.3	78.6	80.9	83.2	85.5	87.9	90.2	92.5

Stroke (mm)	2350	2450	2550	2650	2750	2850	2950	3050	3150	3250	3350	3450	3550	3650	3750	3850	3950	4050	4150	4250	4350
Stroke code	P5	Q5	R 5	S5	T5	U5	V5	W 05	W 15	W 25	W 35	W 45	W 55	W 65	W 75	W 85	W 95	X05	X15	X25	X35
Total lengthL (mm)	2950	3050	3150	3250	3350	3450	3550	3650	3750	3850	3950	4050	4150	4250	4350	4450	4550	4650	4750	4850	4950
K	28	29	30	31	32	33	34	35	36	37	38	39	40	41	42	43	44	45	46	47	48
Body weight (kg)	94.8	97.1	99.4	101.7	104.0	106.3	108.6	110.9	113.2	115.5	117.8	120.1	122.4	124.7	127.0	129.3	131.6	133.9	136.2	138.6	140.9

Dimensions

● KBX-T3D-ST-C

(Straight motor axis, motor capacity 50 W)

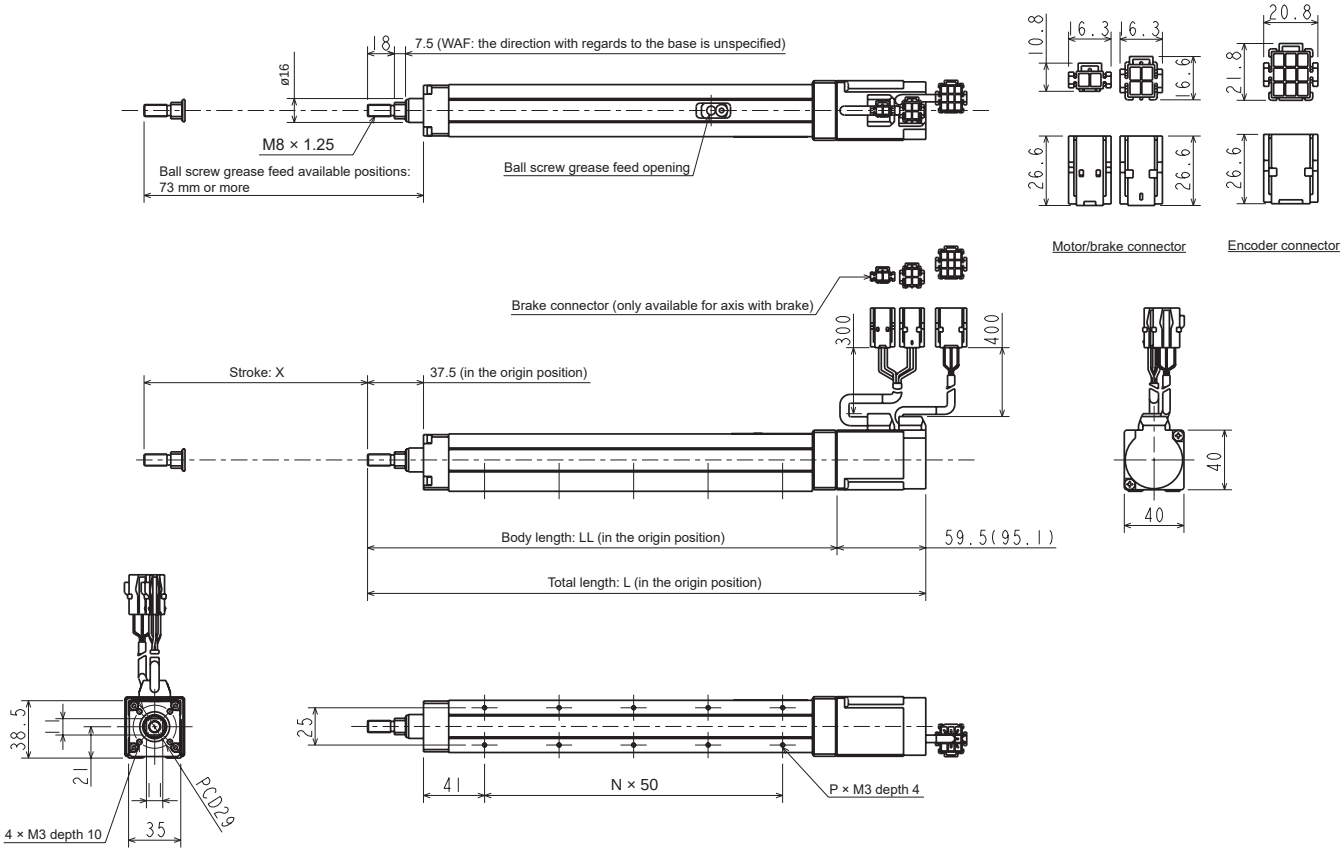

Stroke X (mm)	50	100	150
Stroke code	05	10	15
Total length L (mm)	274.5 (310.1)	324.5 (360.1)	374.5 (410.1)
Body length LL (mm)	215	265	315
Number of mounting holes P	6	8	10
Number of mounting hole intervals N	2	3	4
Body weight (kg)	1.0 (1.2)	1.2 (1.4)	1.3 (1.5)

* The value in ( ) is compatible with axis with brake

Dimensions

● KBX-T4D-ST-C

(Straight motor axis, motor capacity 50 W)

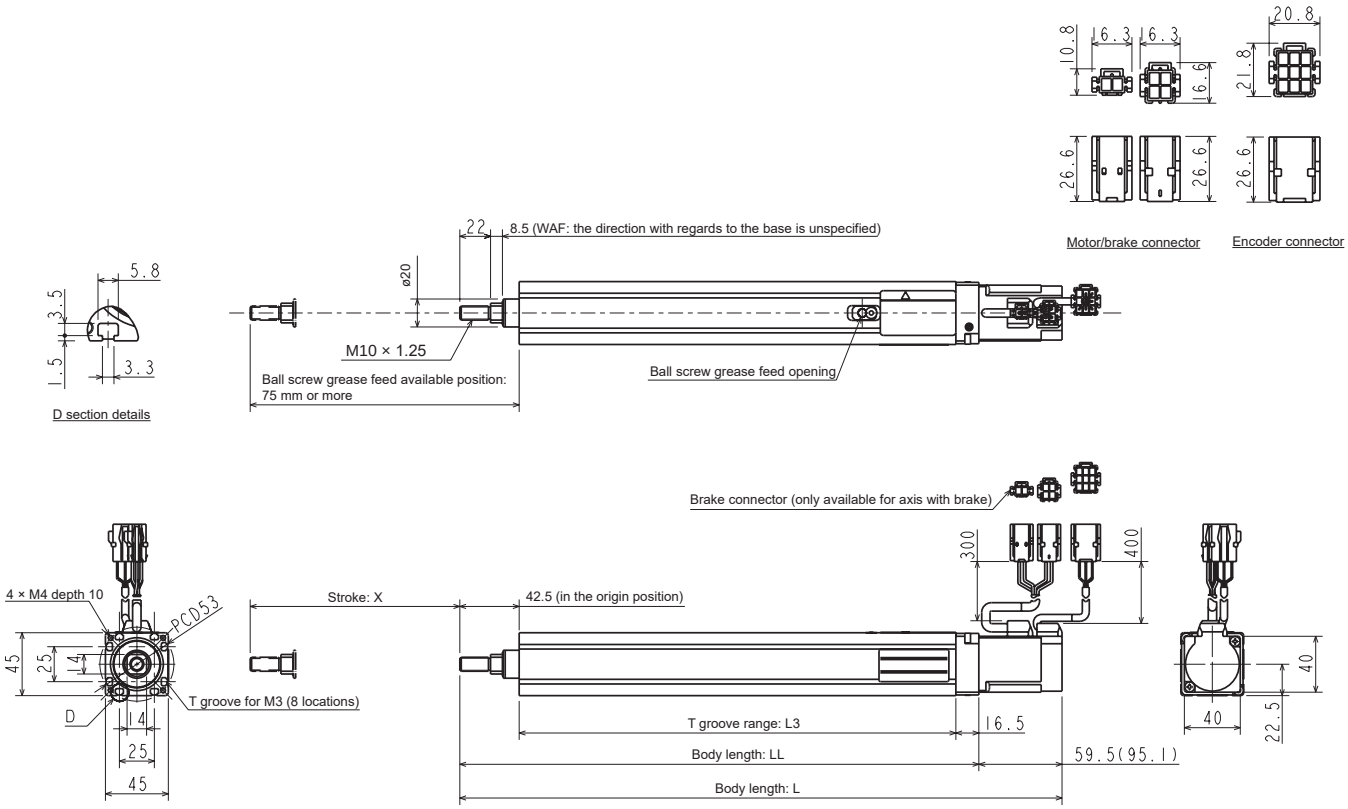

Stroke X (mm)	50	100	150	200
Stroke code	05	10	15	20
Total length L (mm)	281.0 (316.6)	331.0 (366.6)	381.0 (416.6)	431.0 (466.6)
Body length LL (mm)	221.5	271.5	321.5	371.5
T groove range L3 (mm)	162.5	212.5	262.5	312.5
Body weight (kg)	1.5 (1.7)	1.8 (2.0)	2.0 (2.2)	2.3 (2.5)

* The value in ( ) is compatible with axis with brake

Dimensions

● KBX-T5E-ST-C

(Straight motor axis, motor capacity 100 W)

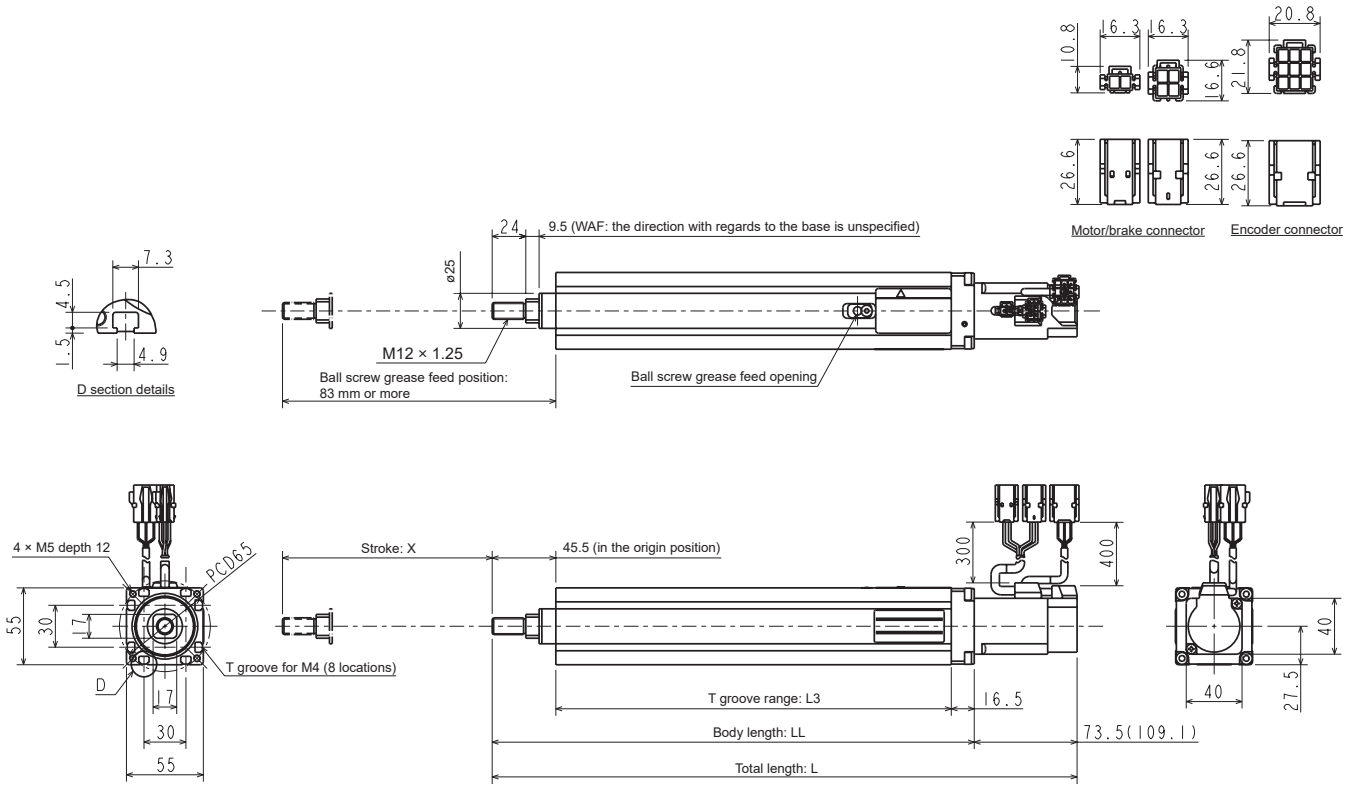

Stroke X (mm)	50	100	150	200	250	300
Stroke code	05	10	15	20	25	30
Total length L (mm)	318.5 (354.1)	368.5 (404.1)	418.5 (454.1)	468.5 (504.1)	518.5 (554.1)	568.5 (604.1)
Body length LL (mm)	245.0	295.0	345.0	395.0	445.0	495.0
T groove range L3 (mm)	183.0	233.0	283.0	333.0	383.0	433.0
Body weight (kg)	2.2 (2.4)	2.6 (2.8)	3.0 (3.2)	3.3 (3.5)	3.7 (3.9)	4.1 (4.3)

* The value in ( ) is compatible with axis with brake

MEMO

Dimensions

● KBX-00D-RH-A

(Harmonic, with L bracket)

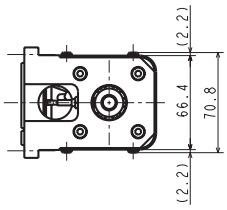

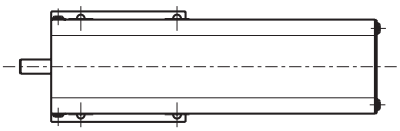

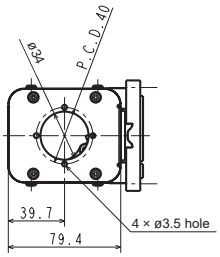

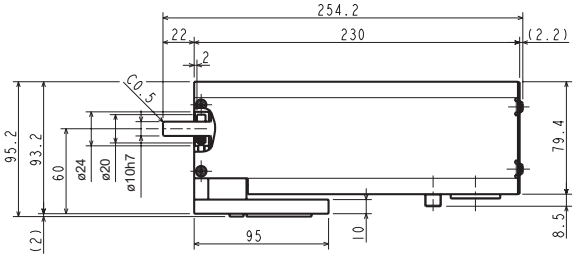

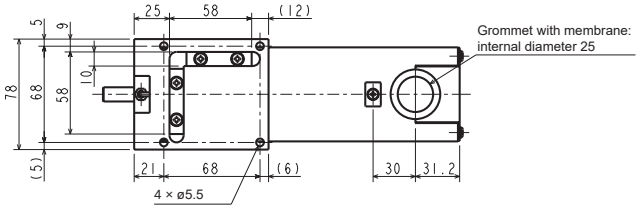

Body weight: 1.9 kg

● KBX-00D-RH-F

(Harmonic, flange)

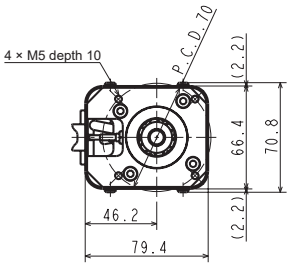

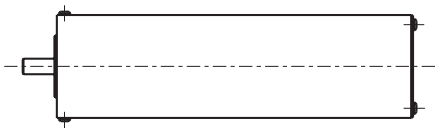

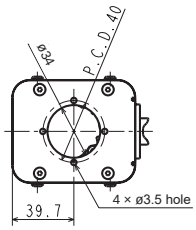

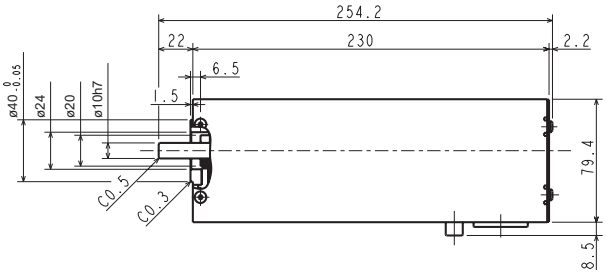

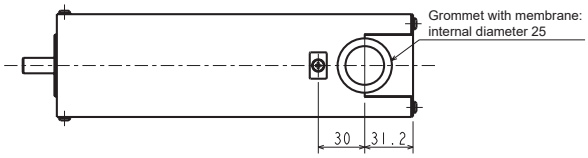

Body weight: 1.7 kg

Dimensions

● KBX-00D-RP-A

(Planet gear, with L bracket)

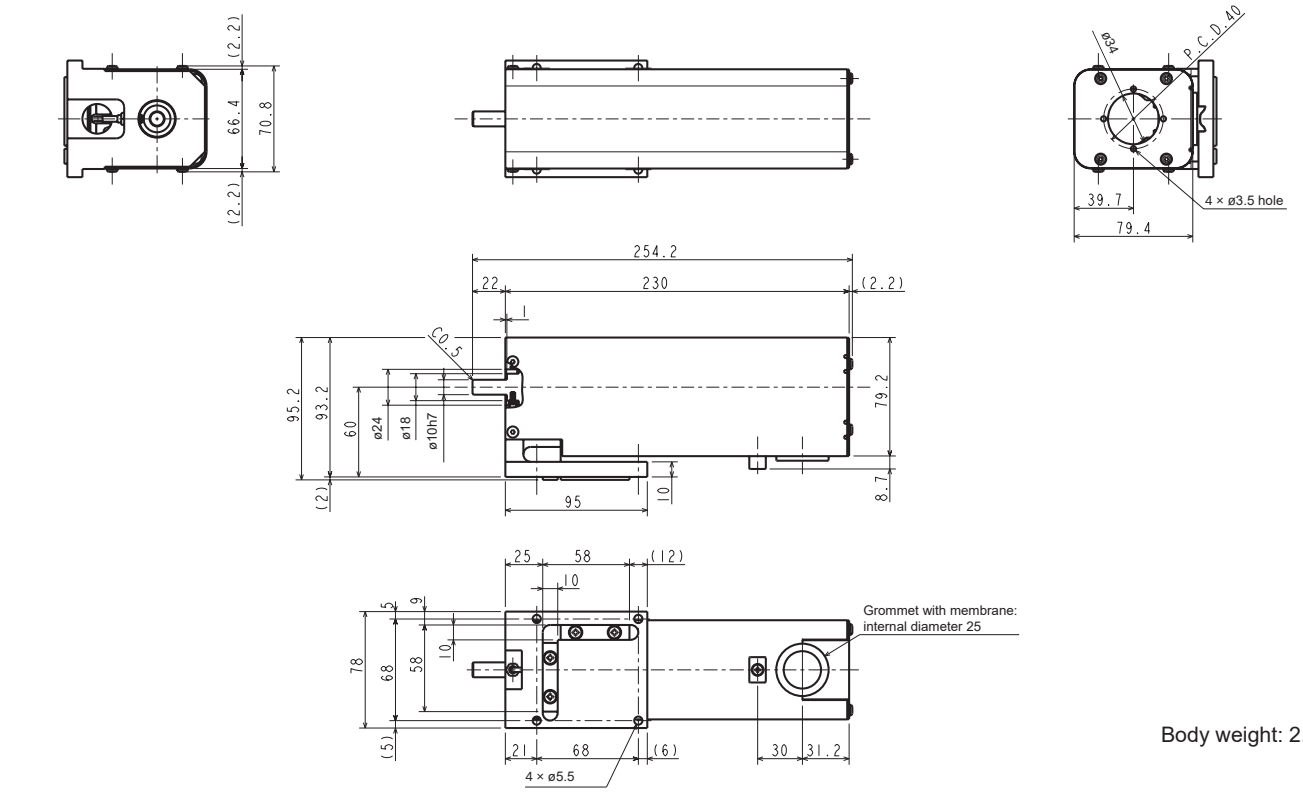

Body weight: 2.4 kg

● KBX-00D-RP-F

(Planet gear, flange)

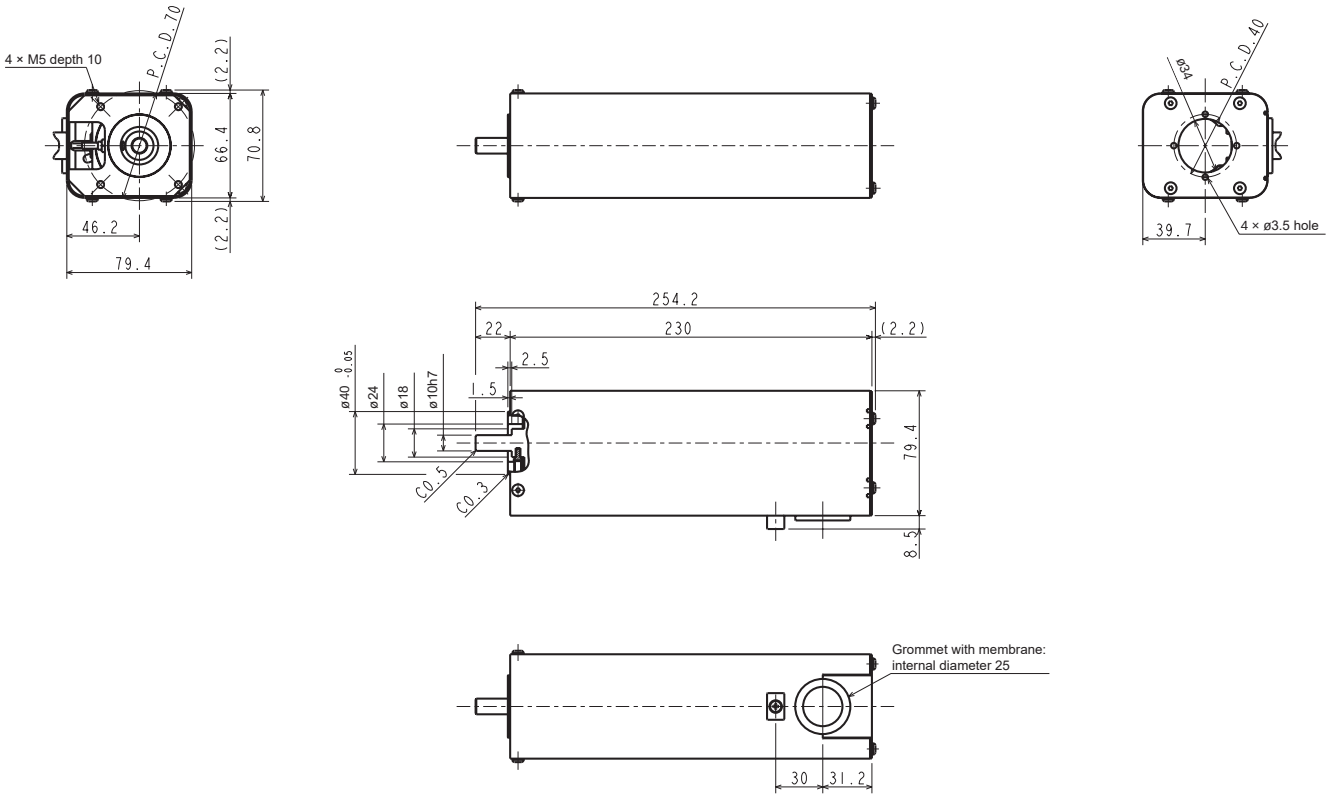

Body weight: 2.2 kg

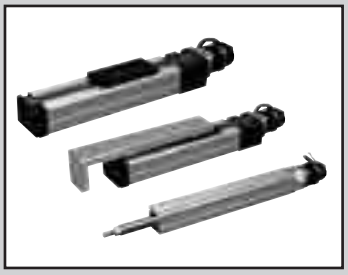

Electric actuator

KBZ Series slider, table, and rod types

- Drive method, ball screw
- Applicable motors: 50 W

Slider specifications

Descriptions		KBZ-5D				KBZ-7D					
Type		Slider				Slider					
Drive method		Rolled ball screw, outer diameter: 8 mm				Rolled ball screw, outer diameter: 12 mm					
Motor		50 W AC servo motor				50 W AC servo motor					
Screw lead	mm	6		12		6			12		
Stroke	mm	50 to 450	500	50 to 450	500	50 to 550	600	700	50 to 550	600	700
Max. speed	mm/s	400	340	800	680	400	340	250	800	680	500
Max. load capacity	Horizontal kg	6		3		12			6		
	Vertical kg	(3)		(1.5)		(4)			(2)		
	Acceleration/deceleration time s	0.1		0.2		0.1			0.2		
Repeatability	mm	±0.02				±0.02					
Static allowable moment of load	Nm	MR: 31 MP: 12 MY: 12				MR: 58 MP: 25.7 MY: 25.7					

* For use as a vertical axis, select the with brake type.
* Max. load capacity applies when load is applied to the top of the slider.
* The value in ( ) for max. load capacity is the value when using regenerative discharge unit (KCA-CAR-0500) or regenerative discharge unit (KCA-CAR-UN50).
* Acceleration/deceleration time is the time it takes to reach the speed specified in the programming.

Table specifications

Descriptions		KBZ-5D				KBZ-7D					
Type		Table type				Table type					
Drive method		Rolled ball screw, outer diameter: 8 mm				Rolled ball screw, outer diameter: 12 mm					
Motor		50 W AC servo motor				50 W AC servo motor					
Screw lead	mm	6		12		6			12		
Stroke	mm	50	100	50	100	50	100	150	50	100	150
Max. speed	mm/s	400		800		400			800		
Max. load capacity	Horizontal kg	4.5	3.0	2.5	1.5	9.0	5.6	3.8	4.5	2.8	1.9
	Vertical kg	(2.5)		(1.0)		(3.5)			(1.5)		
	Acceleration/deceleration time s	0.1		0.1		0.1			0.1		
Repeatability	mm	±0.02				±0.02					
Static allowable moment of load	Nm Stroke 50 mm	MR: 4.4 MP: 1.9 MY: 1.9				MR: 11.7 MP: 3.8 MY: 3.8					
	Stroke 100 mm	MR: 4.4 MP: 1.2 MY: 1.2				MR: 11.7 MP: 2.3 MY: 2.3					
	Stroke 150 mm	-				MR: 11.7 MP: 1.7 MY: 1.7					

* For use as a vertical axis, select the with brake type.
* Max. load capacity applies when load is applied to the top of the slider.
* The value in ( ) for max. load capacity is the value when using regenerative discharge unit (KCA-CAR-0500) or regenerative discharge unit (KCA-CAR-UN50).
* Acceleration/deceleration time is the time it takes to reach the speed specified in the programming.

Rod specifications

Descriptions		KBZ-3D	KBZ-4D
Type		Rod	Rod
Drive method		Rolled ball screw, outer diameter: 8 mm	Rolled ball screw, outer diameter: 12 mm
Motor		50 W AC servo motor	50 W AC servo motor
Screw lead	mm	12	12
Stroke	mm	50 to 150	50 to 200
Max. speed	mm/s	600	600
Max. load capacity	Horizontal kg	3.0	5.2
	Vertical kg	(1.5)	(2.2)
	Acceleration/deceleration time s	0.15	0.15
Repeatability	mm	±0.02	±0.02
Static allowable moment of load	Nm	− (*1)	

*1: Static and dynamic load moment cannot be applied to a rod. Use in combination with linear guide to ensure that radial load is not applied to the rod.
* For use as a vertical axis, select the with brake type.
* Acceleration/deceleration time is the time it takes to reach the speed specified in the programming.
* The value in ( ) for max. load capacity is the value when using regenerative discharge unit (KCA-CAR-0500) or regenerative discharge unit (KCA-CAR-UN50).

How to order axes (slider, rod)

KBZ - 5 D - ST - M 12 N - 50 - M

- KBZ: Model No.
- 5: Ⓐ Body size
- D: Ⓑ Motor capacity
- ST: Ⓒ Motor mount
- M: Ⓓ Output shape
- 12: Ⓔ Lead
- N: Ⓕ Brake
- 50: Ⓖ Stroke
- M: Ⓗ Axis option

Code	Content
Ⓐ Body size (mm)	
3	Width 35 × height 38.5 (rod type only)
4	Width 45 × height 45 (rod type only)
5	Width 45 × height 45 (60) (slider/table types only) ( ) is the body size of table type
7	Width 64 × height 60 (75) (slider/table types only) ( ) is the body size of table type

Refer to the applicable dimensions for details.

Ⓑ Motor capacity	
D	50 W
Ⓒ Motor mount	
ST	Straight
Ⓓ Output shape	
M	Slider
T	Table type
C	Rod
Ⓔ Lead	
06	6 mm (rod type cannot be selected)
12	12 mm
Ⓕ Brake	
N	None
B	Yes
Ⓖ Stroke	
05 to 70	50 to 700 mm (50 mm pitch) (Refer to the applicable dimensions for details on stroke and stroke codes)
Ⓗ Axis option	
Blank	None
M	With motor cover

Dimensions

● KBZ-5D-ST-M

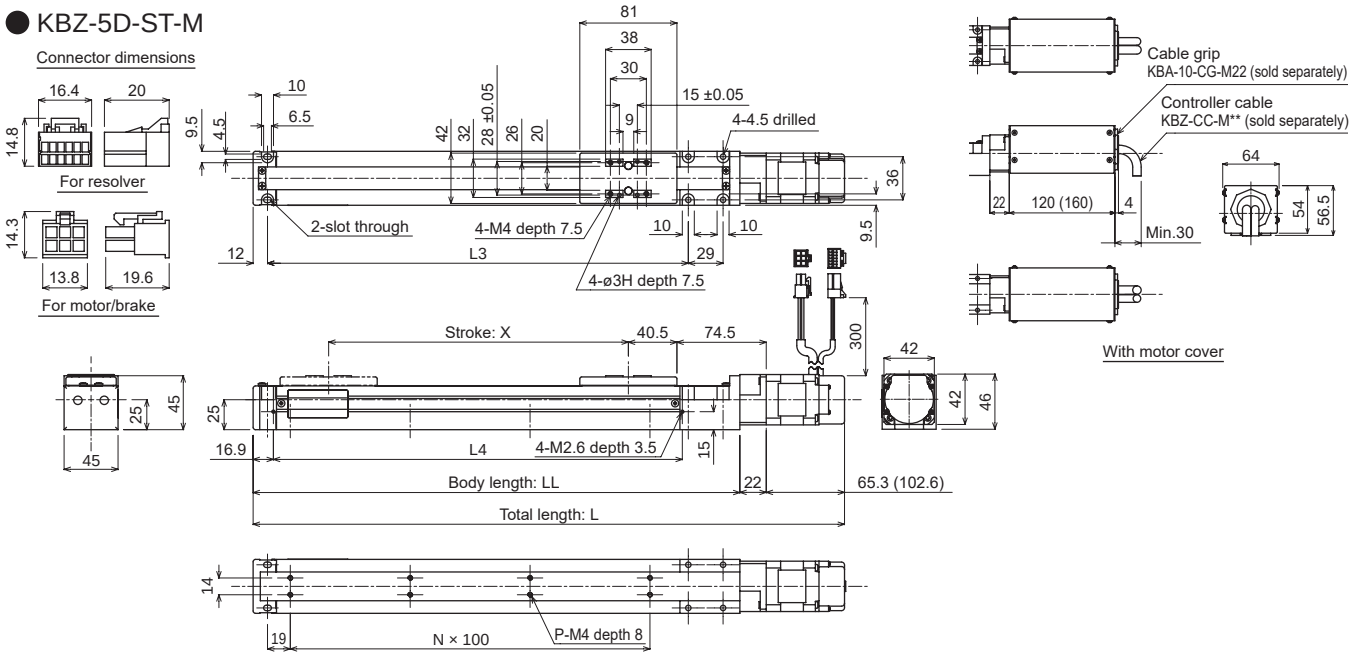

Stroke X (mm)	50	100	150	200	250	300	350	400	450	500
Stroke code	05	10	15	20	25	30	35	40	45	50
Total length L (mm)	293.3 (330.6)	343.3 (380.6)	393.3 (430.6)	443.3 (480.6)	493.3 (530.6)	543.3 (580.6)	593.3 (630.6)	643.3 (680.6)	693.3 (730.6)	743.3 (780.6)
Body length LL (mm)	206	256	306	356	406	456	506	556	606	656
L3 (mm)	151	201	251	301	351	401	451	501	551	601
L4 (mm)	141.6	191.6	241.6	291.6	341.6	391.6	441.6	491.6	541.3	591.6
Number of mounting holes P	4	6	6	8	8	10	10	12	12	14
Number of mounting hole intervals N	1	2	2	3	3	4	4	5	5	6
Body weight (kg)	1.4 (1.6)	1.5 (1.7)	1.6 (1.8)	1.7 (1.9)	1.8 (2.0)	1.9 (2.1)	2.0 (2.2)	2.1 (2.3)	2.2 (2.4)	2.4 (2.6)

* The value in ( ) is compatible with axis with brake.

● KBZ-7D-ST-M

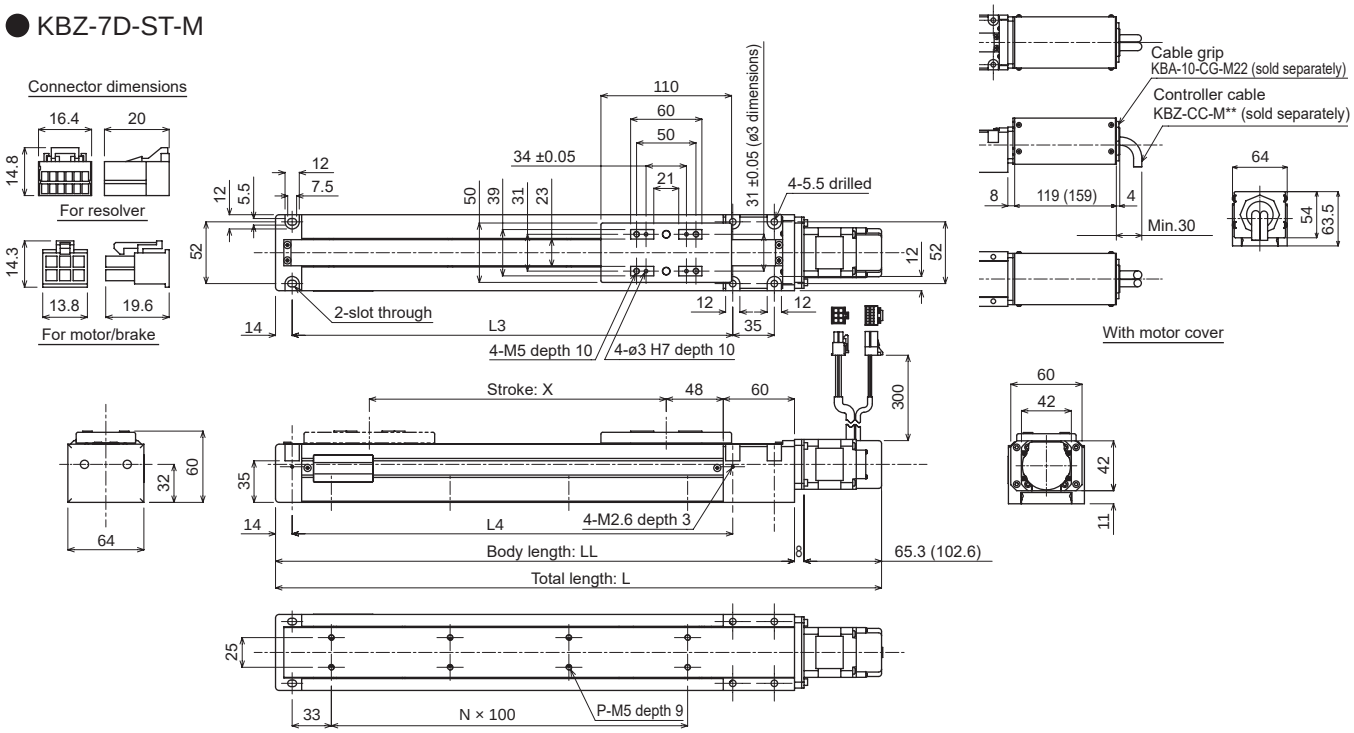

Stroke X (mm)	50	100	150	200	250	300	350	400	450	500	550	600	700
Stroke code	05	10	15	20	25	30	35	40	45	50	55	60	70
Total length L (mm)	310.3 (347.6)	360.3 (397.6)	410.3 (447.6)	460.3 (497.6)	510.3 (547.6)	560.3 (597.6)	610.3 (647.6)	660.3 (697.6)	710.3 (747.6)	760.3 (797.6)	810.3 (847.6)	860.3 (897.6)	960.3 (997.6)
Body length LL (mm)	237	287	337	387	437	487	537	587	637	687	737	787	887
L3 (mm)	171	221	271	321	371	421	471	521	571	621	671	721	821
L4 (mm)	171	221	271	321	371	421	471	521	571	621	671	721	821
Number of mounting holes P	4	6	6	8	8	10	10	12	12	14	14	16	18
Number of mounting hole intervals N	1	2	2	3	3	4	4	5	5	6	6	7	8
Body weight (kg)	2.5 (2.7)	2.7 (2.9)	2.9 (3.1)	2.9 (3.1)	3.1 (3.3)	3.3 (3.5)	3.7 (3.9)	3.9 (4.1)	4.1 (4.3)	4.3 (4.5)	4.5 (4.7)	4.7 (4.9)	5.1 (5.3)

* The value in ( ) is compatible with axis with brake.

Dimensions

● KBZ-5D-ST-T

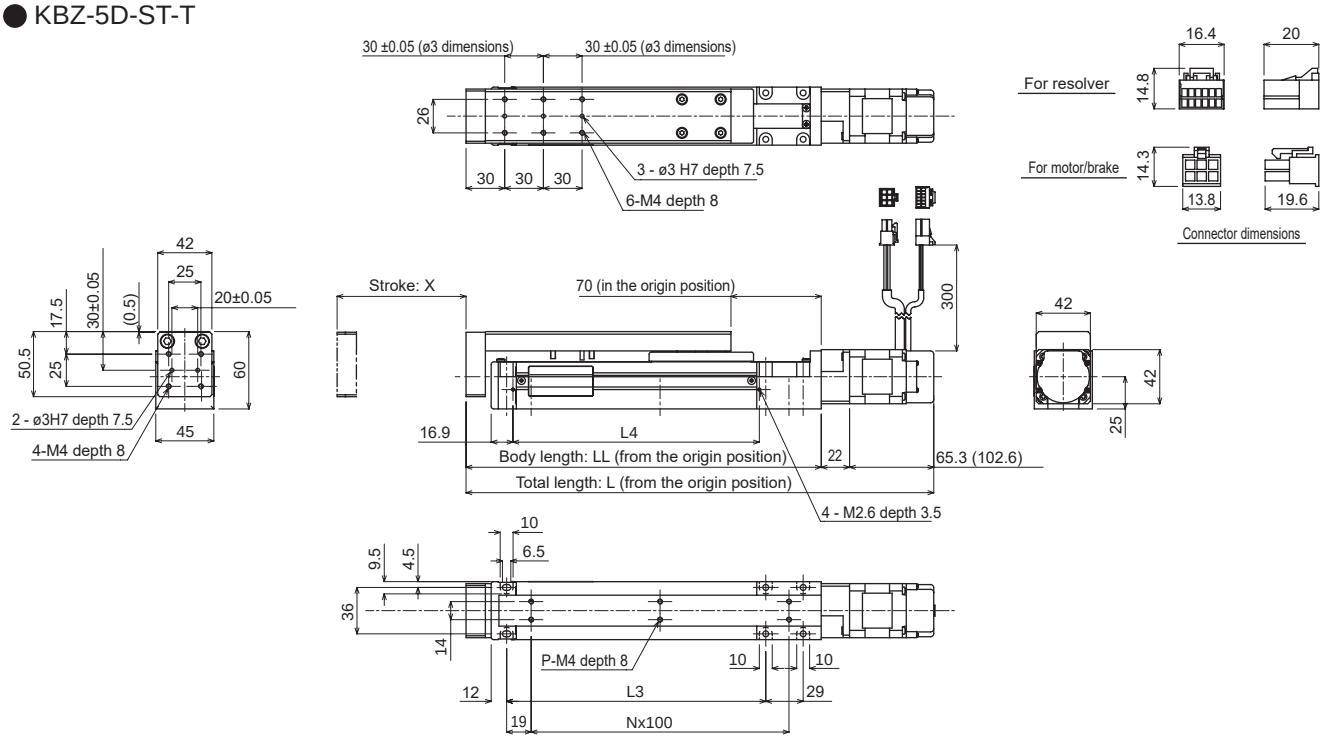

Stroke length X (mm)	50	100
Stroke code	05	10
Total length L (mm)	312.8 (350.1)	362.8 (400.1)
Body length LL (mm)	225.5	275.5
L3 (mm)	151	201
L4 (mm)	141.6	191.6
Number of mounting holes P	4	6
Number of mounting hole intervals N	1	2
Body weight (kg)	1.7 (1.9)	1.9 (2.1)

* The value in ( ) is compatible with axis with brake. Refer to page 58 for with motor cover dimensions.

● KBZ-7D-ST-T

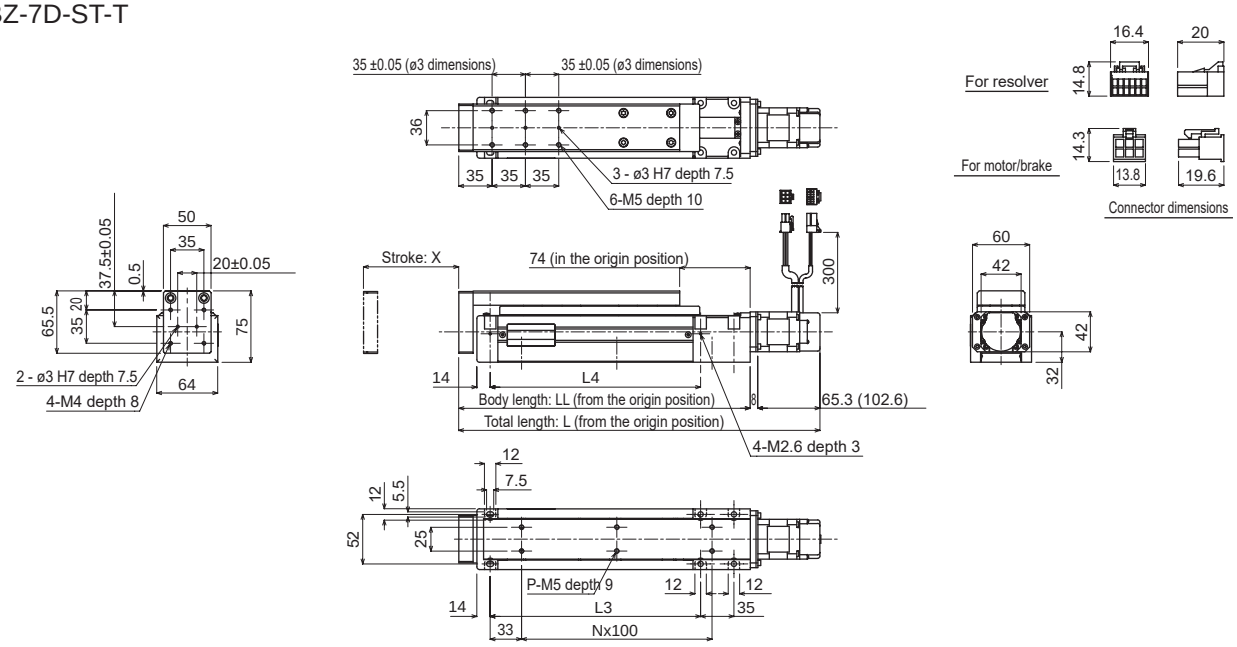

Stroke length X (mm)	50	100	150
Stroke code	05	10	15
Total length L (mm)	329.3 (366.6)	379.3 (416.6)	429.3 (466.6)
Body length LL (mm)	256	306	356
L3 (mm)	171	221	271
L4 (mm)	171	221	271
Number of mounting holes P	4	6	6
Number of mounting hole intervals N	1	2	2
Body weight (kg)	3.0 (3.2)	3.3 (3.5)	3.6 (3.8)

Note The value in ( ) is compatible with axis with brake.
Refer to page 58 for with motor cover dimensions.

Dimensions

● KBZ-3D-ST-C

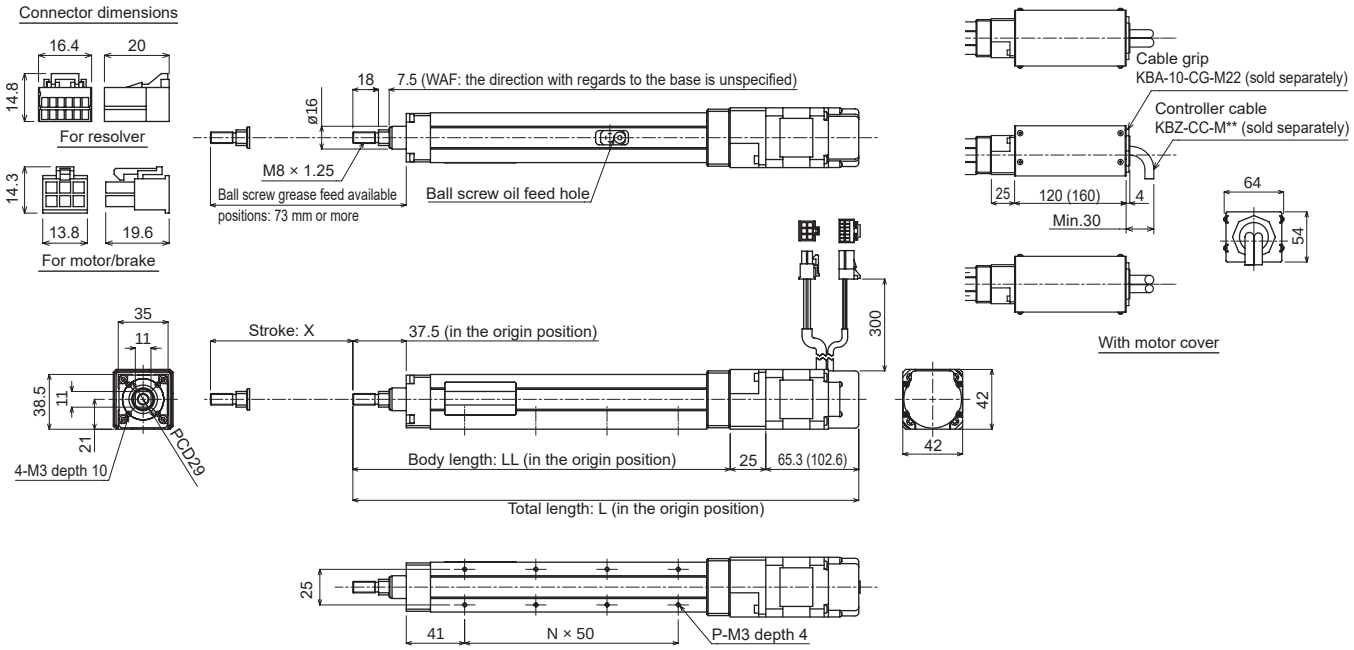

Stroke X (mm)	50	100	150
Stroke code	05	10	15
Total length L (mm)	305.3 (342.6)	355.3 (392.6)	405.3 (442.6)
Body length LL (mm)	215	265	315
Number of mounting holes P	6	8	10
Number of mounting hole intervals N	2	3	4
Body weight (kg)	1.3 (1.5)	1.4 (1.6)	1.5 (1.7)

* The value in ( ) is compatible with axis with brake.

● KBZ-4D-ST-C

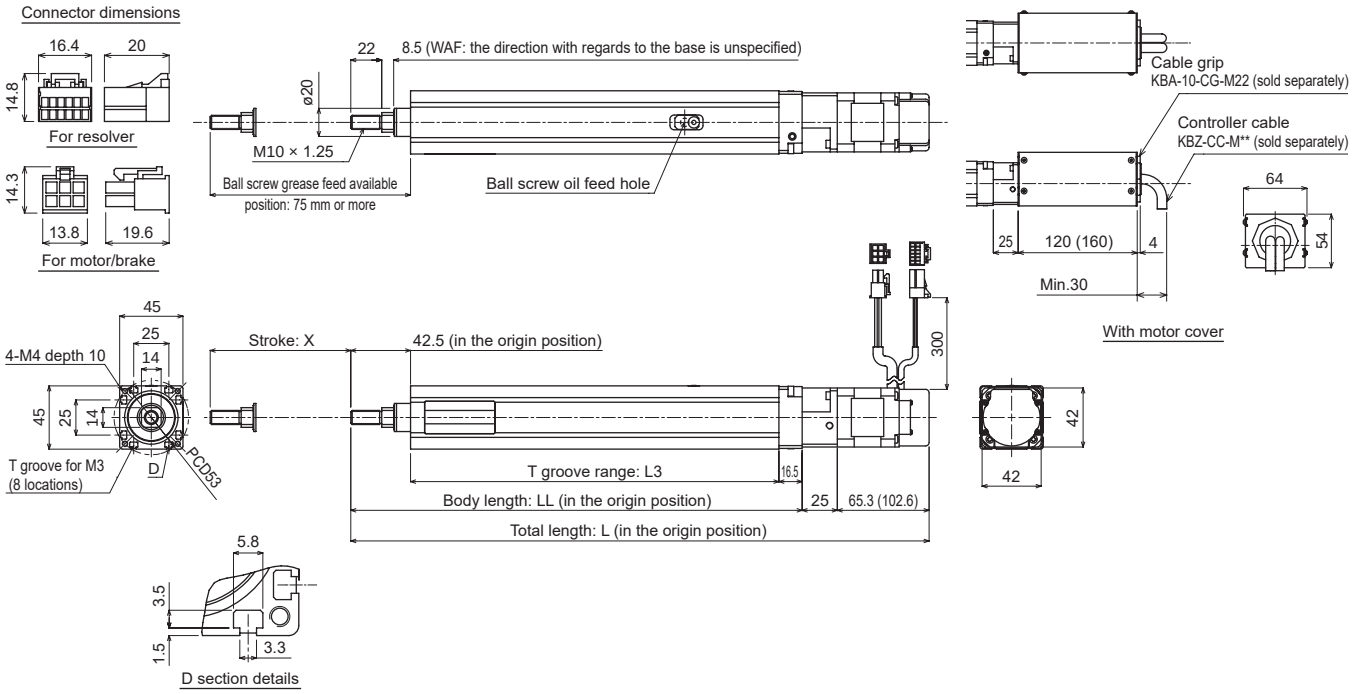

Stroke X (mm)	50	100	150	200
Stroke code	05	10	15	20
Total length L (mm)	311.8 (349.1)	361.8 (399.1)	411.8 (449.1)	461.8 (499.1)
Body length LL (mm)	221.5	271.5	321.5	371.5
T groove range L3 (mm)	162.5	212.5	262.5	312.5
Body weight (kg)	1.4 (1.6)	1.6 (1.8)	1.8 (2.0)	2.1 (2.3)

* The value in ( ) is compatible with axis with brake.

Orthogonal Axis Specifications

Multiple axis combination *There is no set model code. Choose a combination from the table below.

[2 axes combination]

	Specifications	1st axis	2nd axis	1st axis ST	2nd axis ST	Page
X-Y	Ball screw drive Combination 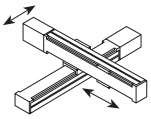	KBX-T7D-ST-M12N-[ST]	KBX-T5D-ST-M12N-[ST]	50 to 600, 700	50 to 400	64
		KBX-10E-ST-S20N-[ST]	KBX-T7D-ST-M12N-[ST]	150 to 1250	50 to 400	65
		KBX-10E-ST-M20N-[ST]	KBX-10E-ST-S20N-[ST]	100 to 1200	150 to 650	66
		KBX-10E-U[R/L/U]-M20N-[ST]	KBX-10E-U[R/L/U]-S20N-[ST]	100 to 1200	150 to 650	67
		KBX-30E-ST-M20N-[ST]	KBX-10E-ST-M20N-[ST]	150 to 1250	100 to 800	68
		KBX-30E-U[R/L/U]-M20N-[ST]	KBX-10E-U[R/L/U]-M20N-[ST]	100 to 1200	100 to 800	69
		KBX-30F-ST-M20N-[ST]	KBX-10E-ST-M20N-[ST]	100 to 1200	100 to 800	70
		KBX-30F-U[R/L/U]-M20N-[ST]	KBX-10E-U[R/L/U]-M20N-[ST]	100 to 1200	100 to 800	71
		KBX-50F-ST-M20N-[ST]	KBX-30E-ST-M20N-[ST]	200 to 1600	150 to 1050	72
		KBX-50F-U[R/L/U]-M20N-[ST]	KBX-30E-ST-M20N-[ST]	200 to 1600	150 to 1050	73
		KBX-50F-ST-M20N-[ST]	KBX-30F-ST-M20N-[ST]	200 to 1600	100 to 1000	74
		KBX-50F-U[R/L/U]-M20N-[ST]	KBX-30F-ST-M20N-[ST]	200 to 1600	100 to 1000	75
		KBX-50G-ST-M20N-[ST]	KBX-50F-ST-M20N-[ST]	200 to 1600	200 to 1000	76
		KBX-60J-ST-M20N-[ST]	KBX-50G-ST-M20N-[ST]	200 to 1700	200 to 1500	77
	Belt drive Combination 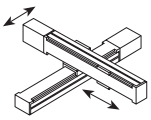	KBX-10E-BT-M21N-[ST]	KBX-10E-B[R/L/U]-S21N-[ST]	100 to 2500	150 to 650	78
		KBX-10F-BT-M21N-[ST]	KBX-10E-B[R/L/U]-S21N-[ST]	100 to 2500	150 to 650	79
		KBX-30E-BT-M21N-[ST]	KBX-10E-B[R/L/U]-M21N-[ST]	100 to 3200	100 to 800	80
		KBX-30F-BT-M21N-[ST]	KBX-10E-B[R/L/U]-M21N-[ST]	100 to 3200	100 to 800	81
		KBX-30F-BT-M21N-[ST]	KBX-10F-B[R/L/U]-M21N-[ST]	100 to 3200	100 to 800	82
		KBX-50F-BT-M21N-[ST]	KBX-30E-B[R/L/U]-M21N-[ST]	200 to 3500	100 to 1000	83
		KBX-50F-BT-M21N-[ST]	KBX-30F-B[R/L/U]-M21N-[ST]	200 to 3500	100 to 1000	84
X-Z	Ball screw drive Combination 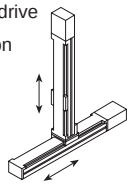	KBX-10E-ST-M20N-[ST]	KBX-10E-ST-S10B-[ST]	100 to 1200	150 to 450	85
		KBX-30E-ST-M20N-[ST]	KBX-10E-ST-M10B-[ST]	150 to 1250	100 to 700	86
		KBX-30F-ST-M20N-[ST]	KBX-10E-ST-M10B-[ST]	100 to 1200	100 to 900	87
		KBX-50F-ST-M20N-[ST]	KBX-30E-ST-M10B-[ST]	200 to 1600	150 to 1050	88
		KBX-50F-ST-M20N-[ST]	KBX-30F-ST-M10B-[ST]	200 to 1600	100 to 1000	89
		KBX-50F-ST-M20N-[ST]	KBX-50F-ST-M10B-[ST]	200 to 1600	200 to 1000	90
	Belt drive Combination 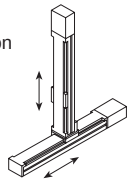	KBX-10E-B[R/L/U]-M21N-[ST]	KBX-10E-ST-S10B-[ST]	100 to 2500	150 to 450	91
		KBX-10F-B[R/L/U]-M21N-[ST]	KBX-10E-ST-S10B-[ST]	100 to 2500	150 to 450	92
		KBX-30E-B[R/L/U]-M21N-[ST]	KBX-10E-ST-M10B-[ST]	100 to 3200	100 to 700	93
		KBX-30F-B[R/L/U]-M21N-[ST]	KBX-10E-ST-M10B-[ST]	100 to 3200	100 to 900	94
		KBX-50F-B[R/L/U]-M21N-[ST]	KBX-30E-ST-M10B-[ST]	200 to 3500	150 to 1050	95
		KBX-50F-B[R/L/U]-M21N-[ST]	KBX-30F-ST-M10B-[ST]	200 to 3500	100 to 1000	96
Y-Z	Ball screw drive Combination 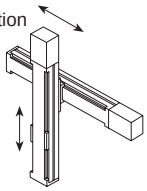	KBX-T7D-ST-M12N-[ST]	KBX-T5D-ST-M06B-[ST]	50 to 600, 700	50 to 500	97
		KBX-10E-ST-S20N-[ST]	KBX-T7D-ST-M06B-[ST]	150 to 1250	50 to 600	98
		KBX-10E-ST-M20N-[ST]	KBX-10E-U[R/L/U]-S10B-[ST]	100 to 1200	150 to 550	99
		KBX-30E-ST-M20N-[ST]	KBX-10E-U[R/L/U]-M10B-[ST]	150 to 1250	100 to 800	100
		KBX-30F-ST-M20N-[ST]	KBX-10E-U[R/L/U]-M10B-[ST]	100 to 1200	100 to 1000	101
		KBX-50F-ST-M20N-[ST]	KBX-30E-U[R/L/U]-M10B-[ST]	200 to 1600	100 to 1000	102
		KBX-50F-ST-M20N-[ST]	KBX-30F-U[R/L/U]-M10B-[ST]	200 to 1600	100 to 1000	103
	Belt drive Combination 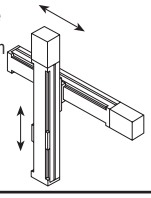	KBX-10E-B[R/L/U]-S21N-[ST]	KBX-T7D-ST-M06B-[ST]	150 to 2550	50 to 600	104
		KBX-10E-B[R/L/U]-M21N-[ST]	KBX-10E-U[R/L/U]-S10B-[ST]	100 to 2500	150 to 550	105
		KBX-30E-B[R/L/U]-M21N-[ST]	KBX-10E-U[R/L/U]-M10B-[ST]	100 to 3200	100 to 800	106
		KBX-30F-B[R/L/U]-M21N-[ST]	KBX-10E-U[R/L/U]-M10B-[ST]	100 to 3200	100 to 1000	107
		KBX-50F-B[R/L/U]-M21N-[ST]	KBX-30E-U[R/L/U]-M10B-[ST]	200 to 3500	100 to 1000	108
		KBX-50F-B[R/L/U]-M21N-[ST]	KBX-30F-U[R/L/U]-M10B-[ST]	200 to 3500	100 to 1000	109
Z-Y	Ball screw drive Combination 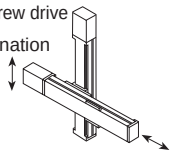	KBX-10E-ST-M05B-[ST]	KBX-10E-ST-S20N-[ST]	100 to 1000	150 to 650	110
		KBX-30E-ST-M05B-[ST]	KBX-10E-ST-M20N-[ST]	150 to 1050	100 to 900	111
		KBX-30F-ST-M05B-[ST]	KBX-10E-ST-M20N-[ST]	100 to 1000	100 to 900	112
		KBX-50F-ST-M05B-[ST]	KBX-30E-ST-M20N-[ST]	200 to 1600	150 to 1050	113
		KBX-50F-ST-M05B-[ST]	KBX-30F-ST-M20N-[ST]	200 to 1600	100 to 1000	114
	Ball screw, belt combination 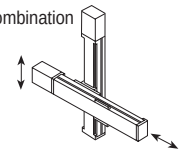	KBX-10E-ST-M05B-[ST]	KBX-10E-B[R/L/U]-S21N-[ST]	100 to 1000	150 to 650	115
		KBX-30E-ST-M05B-[ST]	KBX-10E-B[R/L/U]-M21N-[ST]	150 to 1050	100 to 800	116
		KBX-30F-ST-M05B-[ST]	KBX-10E-B[R/L/U]-M21N-[ST]	100 to 1000	100 to 900	117
		KBX-30F-ST-M05B-[ST]	KBX-10F-B[R/L/U]-M21N-[ST]	100 to 1000	100 to 900	118
		KBX-50F-ST-M05B-[ST]	KBX-30E-B[R/L/U]-M21N-[ST]	200 to 1600	100 to 1000	119
		KBX-50F-ST-M05B-[ST]	KBX-30F-B[R/L/U]-M21N-[ST]	200 to 1600	100 to 1000	120

[3 axes combination]

Specifications		X-axis	Y-axis	Z-axis	X-axis ST	Y-axis ST	Z-axis ST	Page
X-Y-Z	Ball screw drive Combination 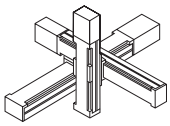	KBX-10E-ST-S20N-[ST]	KBX-T7D-ST-M12N-[ST]	KBX-T5D-ST-M06B-[ST]	150 to 1250	50 to 300	50 to 300	121
		KBX-10E-U[R/L/U]-S20N-[ST]	KBX-T7D-ST-M12N-[ST]	KBX-T5D-ST-M06B-[ST]	150 to 1250	50 to 300	50 to 300	122
		KBX-10E-ST-M20N-[ST]	KBX-10E-ST-S20N-[ST]	KBX-T7D-ST-M06B-[ST]	100 to 1200	150 to 450	50 to 300	123
		KBX-10E-U[R/L/U]-M20N-[ST]	KBX-10E-U[R/L/U]-S20N-[ST]	KBX-T7D-ST-M06B-[ST]	100 to 1200	150 to 450	50 to 300	124
		KBX-30F-ST-M20N-[ST]	KBX-10E-ST-S20N-[ST]	KBX-T7D-ST-M06B-[ST]	100 to 1200	150 to 750	50 to 300	125
		KBX-30F-U[R/L/U]-M20N-[ST]	KBX-10E-U[R/L/U]-M20N-[ST]	KBX-T7D-ST-M06B-[ST]	100 to 1200	150 to 750	50 to 300	126
		KBX-30E-ST-M20N-[ST]	KBX-10E-ST-M20N-[ST]	KBX-10E-U[R/L/U]-S10B-[ST]	150 to 1250	100 to 500	150 to 350	127
		KBX-30E-U[R/L/U]-M20N-[ST]	KBX-10E-U[R/L/U]-M20N-[ST]	KBX-10E-U[R/L/U]-S10B-[ST]	100 to 1200	100 to 500	150 to 350	128
		KBX-30F-ST-M20N-[ST]	KBX-10E-ST-M20N-[ST]	KBX-10E-U[R/L/U]-S10B-[ST]	100 to 1200	100 to 500	150 to 350	129
		KBX-30F-U[R/L/U]-M20N-[ST]	KBX-10E-U[R/L/U]-M20N-[ST]	KBX-10E-U[R/L/U]-S10B-[ST]	100 to 1200	100 to 500	150 to 350	130
		KBX-50F-ST-M20N-[ST]	KBX-30E-ST-M20N-[ST]	KBX-10E-ST-M05B-[ST]	200 to 1600	150 to 1050	100 to 300	131
		KBX-50F-U[R/L/U]-M20N-[ST]	KBX-30E-ST-M20N-[ST]	KBX-10E-ST-M05B-[ST]	200 to 1600	150 to 1050	100 to 300	132
		KBX-50F-ST-M20N-[ST]	KBX-30F-ST-M20N-[ST]	KBX-10E-ST-M05B-[ST]	200 to 1600	100 to 1000	100 to 300	133
		KBX-50F-U[R/L/U]-M20N-[ST]	KBX-30F-ST-M20N-[ST]	KBX-10E-ST-M05B-[ST]	200 to 1600	100 to 1000	100 to 300	134
		KBX-50G-ST-M20N-[ST]	KBX-50F-ST-M20N-[ST]	KBX-30F-ST-M05B-[ST]	200 to 1600	200 to 1000	100 to 300	135
		KBX-60J-ST-M20N-[ST]	KBX-50G-ST-M20N-[ST]	KBX-30F-ST-M05B-[ST]	200 to 1700	200 to 1500	100 to 300	136
	Belt drive Combination 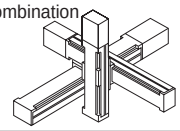	KBX-10F-BT-M21N-[ST]	KBX-10E-B[R/L/U]-S21N-[ST]	KBX-T7D-ST-M06B-[ST]	150 to 2550	150 to 450	50 to 300	137
		KBX-30F-BT-M21N-[ST]	KBX-10E-B[R/L/U]-S21N-[ST]	KBX-T7D-ST-M06B-[ST]	100 to 3200	150 to 750	50 to 300	138
		KBX-30F-BT-M21N-[ST]	KBX-10E-B[R/L/U]-M21N-[ST]	KBX-10E-U[R/L/U]-S10B-[ST]	100 to 3200	100 to 500	150 to 350	139
		KBX-50F-BT-M21N-[ST]	KBX-30E-B[R/L/U]-M21N-[ST]	KBX-10E-ST-M05B-[ST]	200 to 3500	100 to 1000	100 to 300	140
		KBX-50F-BT-M21N-[ST]	KBX-30F-B[R/L/U]-M21N-[ST]	KBX-10E-ST-M05B-[ST]	200 to 3500	100 to 1000	100 to 300	141

[4 axes combination]

Specifications		X-axis	Y-axis	Z-axis	R-axis	X-axis ST	Y-axis ST	Z-axis ST	R-axis °	Page
X-Y-Z-R	Ball screw drive Combination 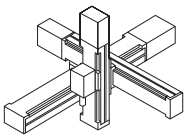	KBX-50F-ST-M20N-[ST]	KBX-30E-ST-M20N-[ST]	KBX-10E-ST-M05B-[ST]	KBX -00D -RH-A	200 to 1600	150 to 1050	100 to 300	360	142
		KBX-50F-U[R/L/U]-M20N-[ST]	KBX-30E-ST-M20N-[ST]	KBX-10E-ST-M05B-[ST]			150 to 1050			143
		KBX-50F-ST-M20N-[ST]	KBX-30F-ST-M20N-[ST]	KBX-10E-ST-M05B-[ST]			100 to 1000			144
		KBX-50F-U[R/L/U]-M20N-[ST]	KBX-30F-ST-M20N-[ST]	KBX-10E-ST-M05B-[ST]			100 to 1000			145
		KBX-50F-ST-M20N-[ST]	KBX-30E-ST-M20N-[ST]	KBX-10E-ST-M05B-[ST]	KBX -00D -RP-A		150 to 1050			146
		KBX-50F-U[R/L/U]-M20N-[ST]	KBX-30E-ST-M20N-[ST]	KBX-10E-ST-M05B-[ST]			150 to 1050			147
		KBX-50F-ST-M20N-[ST]	KBX-30F-ST-M20N-[ST]	KBX-10E-ST-M05B-[ST]			100 to 1000			148
		KBX-50F-U[R/L/U]-M20N-[ST]	KBX-30F-ST-M20N-[ST]	KBX-10E-ST-M05B-[ST]			100 to 1000			149

[Units necessary for multiple axis combination (Example of 4 axes combination)]

Part name	Model No.	Summary
Shaft body	KBX-50F-UL-M20N-40	Combination (X-axis)
Shaft body	KBX-30F-ST-M20N-40	Combination (Y-axis)
Shaft body	KBX-10E-ST-M05B-30	Combination (Z-axis)
Shaft body	KBX-00D-RP-A	Combination (R-axis)
Assembly bracket	KBX-53-BK-L02	For between X-Y-axes
Assembly bracket	KBX-31-BK-P06	For between Y-Z-axes
CN box	KBA-10-BX-F□□	For various axes
Cable grip	KBA-10-CG-M22	For CN box
CN box wrench	KBA-CGSP-41	Tool for assembly
CN box bracket	KBA-FBK-A106	CN box mounting bracket for R-axis
Hand flexible bracket	KBA-FBK-A107	Flexible duct mounting bracket for between Z-R-axes
Flexible duct/flexible tube	KBA-10-FD-□□	For various axes
Flexible/tube tray	KBA-10-TT-L24	Flexible duct tray
Sleeve cone	KBA-10-SC-A02	For flexible tube
Support guide	KBA-10-SG-M40	For Y-axis support
Controller cable	KBX-10-CC-M□□	For various axes
Controller	KCA-25-M10-□□□	Master (Scanner) unit
Controller	KCA-25-S10-□□□	Slave (Adapter) unit
I/O cable	KCA-10-IC-A□	PLC communication cable
Link cable	KCA-10-LC-A□	Link cable
Communication cable	KCA-PCBL-31	PC communication cable
PC software	KCA-SF-98D	Set software
Handy terminal	KCA-TPH-4C	Set tools

Orthogonal axis specifications: X-Y specifications

Specifications

Descriptions		X-axis	Y-axis
Axis		KBX-T7D-ST-M12N-□□	KBX-T5D-ST-M12N-□□
Stroke 50 mm units	mm	50 to 600, 700	50 to 400
Max. speed	mm/s	800 (*1)	800
Repeatability	mm	±0.02	
Ball screw lead	mm	12	12
Motor size	W	50	50

Acceleration/deceleration time to the max. speed setting: 0.3 sec or greater

Ball screw drive

X-axis: ball screw drive
Straight motor axis
Y-axis: ball screw drive
Straight motor axis
(Note) Flexible duct and other wiring guidance parts are not included.

(*1) For the following stroke, max. speed varies

	Stroke (mm)	Max. speed (mm/s)
X-axis	50 to 550	800
	600	680
	700	500

Max. load capacity (kg)	Y-axis stroke							
	50 mm	100 mm	150 mm	200 mm	250 mm	300 mm	350 mm	400 mm
	5.0	5.0	4.0	4.0	2.0	2.0	1.0	1.0

Dimensions

R: Right-handed

Stroke X (KBX-T7D)	50	100	150	200	250	300	350	400	450	500	550	600	700
Number of mounting holes A	4	6	6	8	8	10	10	12	12	14	14	16	18
Number of pitches B	1	2	2	3	3	4	4	5	5	6	6	7	8

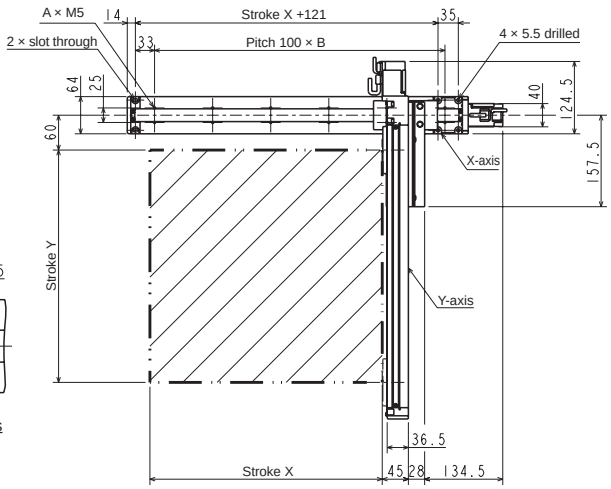

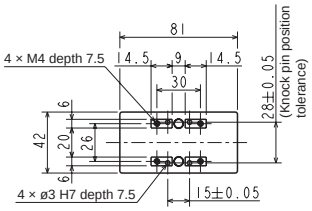

Y-axis slider details

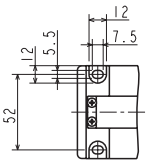

X-axis slot details

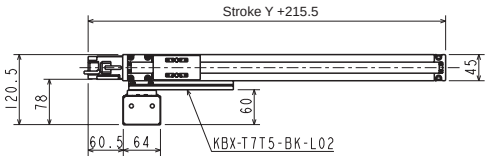

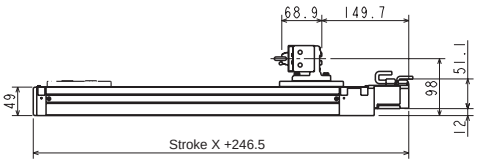

L: Left-handed

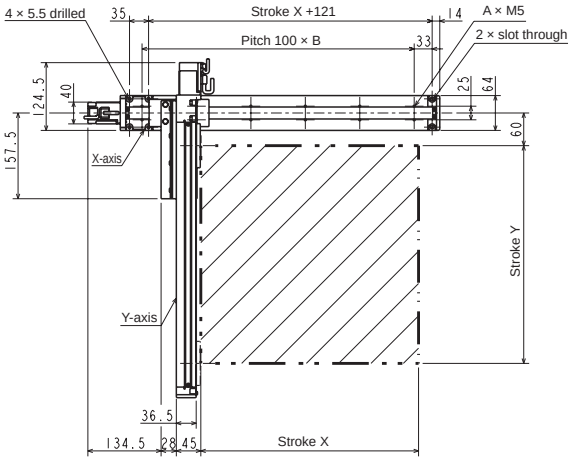

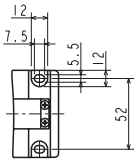

X-axis slot details

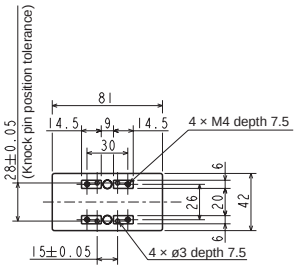

Y-axis slider details

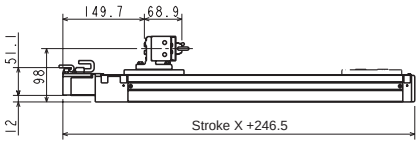

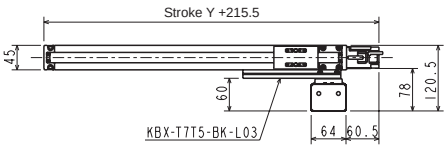

Orthogonal axis specifications: X-Y flexible duct specifications

Specifications

Descriptions		X-axis	Y-axis
Axis		KBX-10E-ST-S20N-□5	KBX-T7D-ST-M12N-□□
Stroke X-axis 100 mm units Y-axis 50 mm units	mm	150 to 1250	50 to 400
Max. speed	mm/s	1200 (*1)	800
Repeatability	mm	±0.01	±0.02
Ball screw lead	mm	20	12
Motor size	W	100	50

Acceleration/deceleration time to the max. speed setting: 0.36 sec or greater

Ball screw drive

X-axis: ball screw drive
Straight motor axis
Y-axis: ball screw drive
Straight motor axis

(*1) For the following stroke, max. speed varies

	Stroke (mm)	Max. speed (mm/s)
X-axis	750	1000
	850	800
	950 to 1050	600
	1150 to 1250	400

Max. load capacity (kg)	Y-axis stroke							
	50 mm	100 mm	150 mm	200 mm	250 mm	300 mm	350 mm	400 mm
	10.5	10.5	6.5	6.5	3.0	3.0	0.5	0.5

Dimensions

R: Right-handed

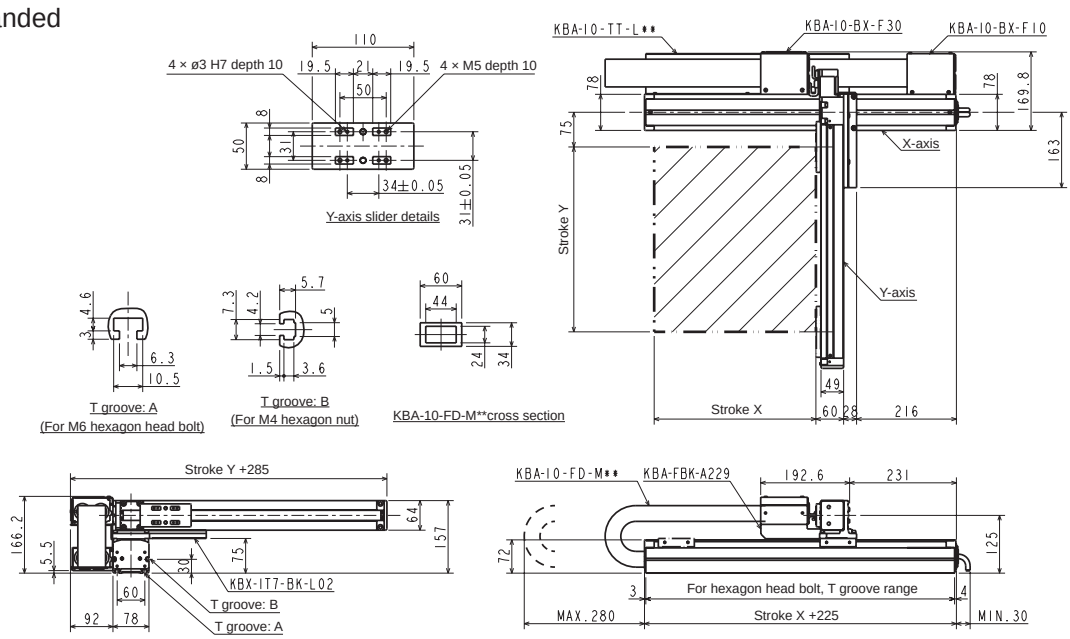

L: Left-handed

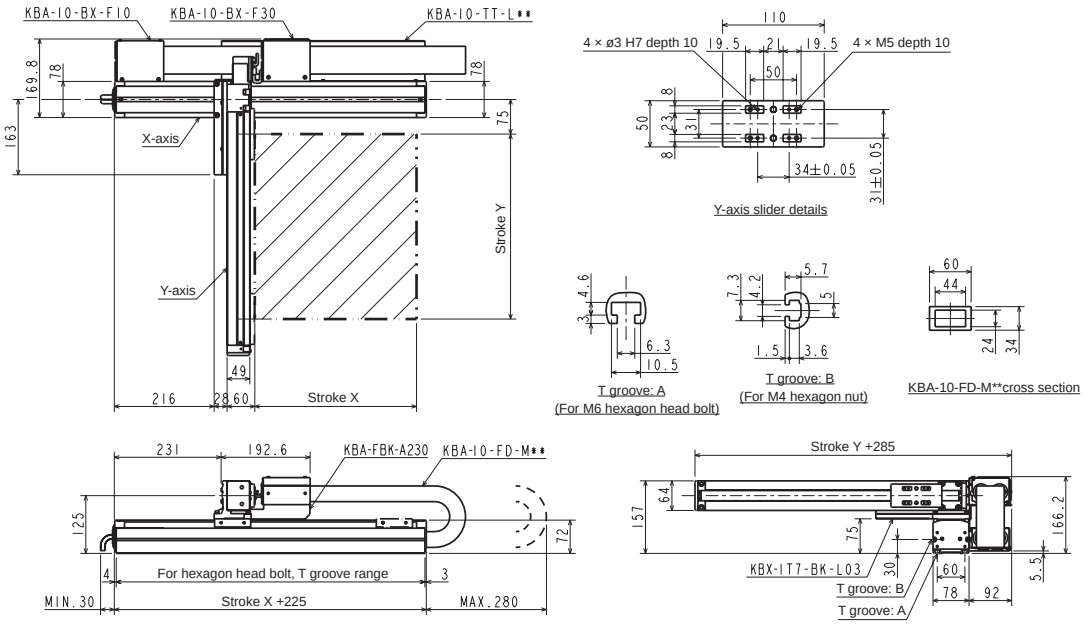

Orthogonal axis specifications: X-Y flexible duct specifications

Specifications

Descriptions		X-axis	Y-axis
Axis		KBX-10E-ST-M20N-□0	KBX-10E-ST-S20N-□5
Stroke 100 mm units	mm	100 to 1200	150 to 650
Max. speed	mm/s	1200 (*1)	1200
Repeatability	mm	±0.01	
Ball screw lead	mm	20	20
Motor size	W	100	100

Acceleration/deceleration time to the max. speed setting: 0.36 sec or greater

Ball screw drive

X-axis: ball screw drive
Straight motor axis
Y-axis: ball screw drive
Straight motor axis

(*1) For the following stroke, max. speed varies

	Stroke (mm)	Max. speed (mm/s)
X-axis	700	1000
	800	800
	900 to 1000	600
	1100 to 1200	400

Max. load capacity (kg)	Y-axis stroke					
	150 mm	250 mm	350 mm	450 mm	550 mm	650 mm
	9.0	8.0	6.5	5.0	3.0	1.0

Dimensions

R: Right-handed

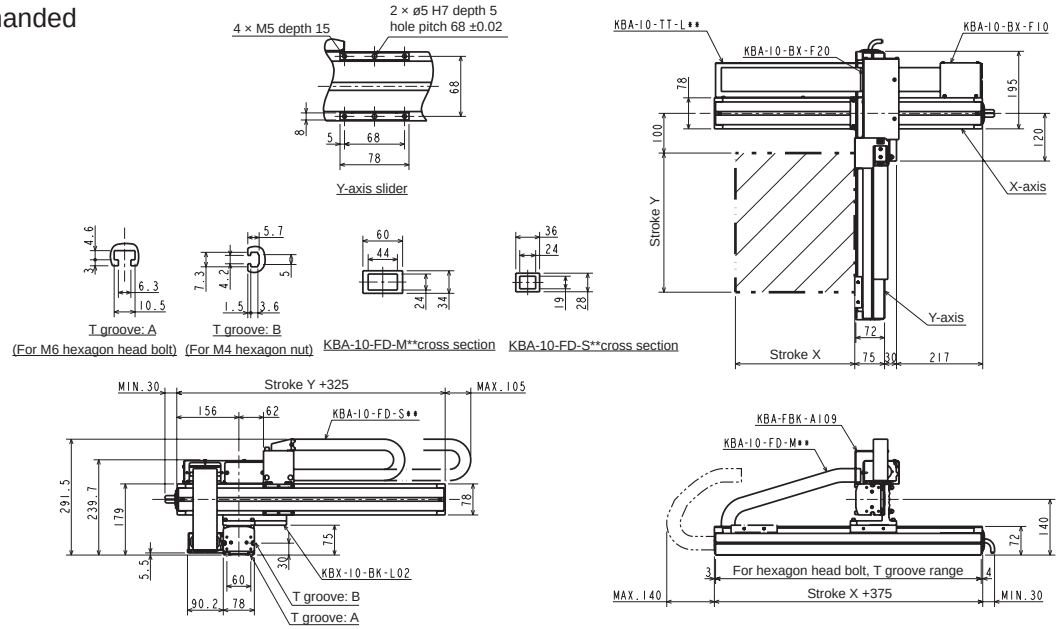

L: Left-handed

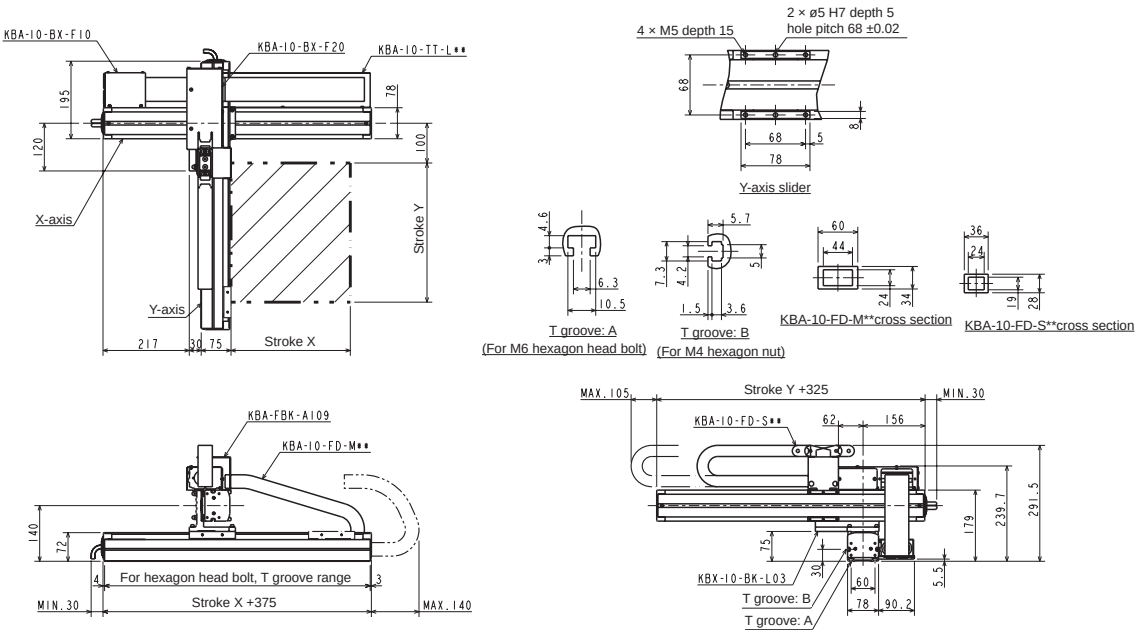

Orthogonal axis specifications: X-Y flexible duct specifications

Specifications

Descriptions		X-axis	Y-axis
Axis		KBX-10E-U□-M20N-□0	KBX-10E-U□-S20N-□5
Stroke 100 mm units	mm	100 to 1200	150 to 650
Max. speed	mm/s	1200 (*1)	1200
Repeatability	mm	±0.01	
Ball screw lead	mm	20	20
Motor size	W	100	100

Acceleration/deceleration time to the max. speed setting: 0.36 sec or greater

Ball screw drive

X-axis: ball screw drive
Motor: Left (R)/Right (L)
Y-axis: ball screw drive
Motor: Right (R)/Left (L)

(*1) For the following stroke, max. speed varies

	Stroke (mm)	Max. speed (mm/s)
X-axis	700	1000
	800	800
	900 to 1000	600
	1100 to 1200	400

Max. load capacity (kg)	Y-axis stroke					
	150 mm	250 mm	350 mm	450 mm	550 mm	650 mm
	9.0	8.0	6.5	5.0	3.0	1.0

Dimensions

R: Right-handed

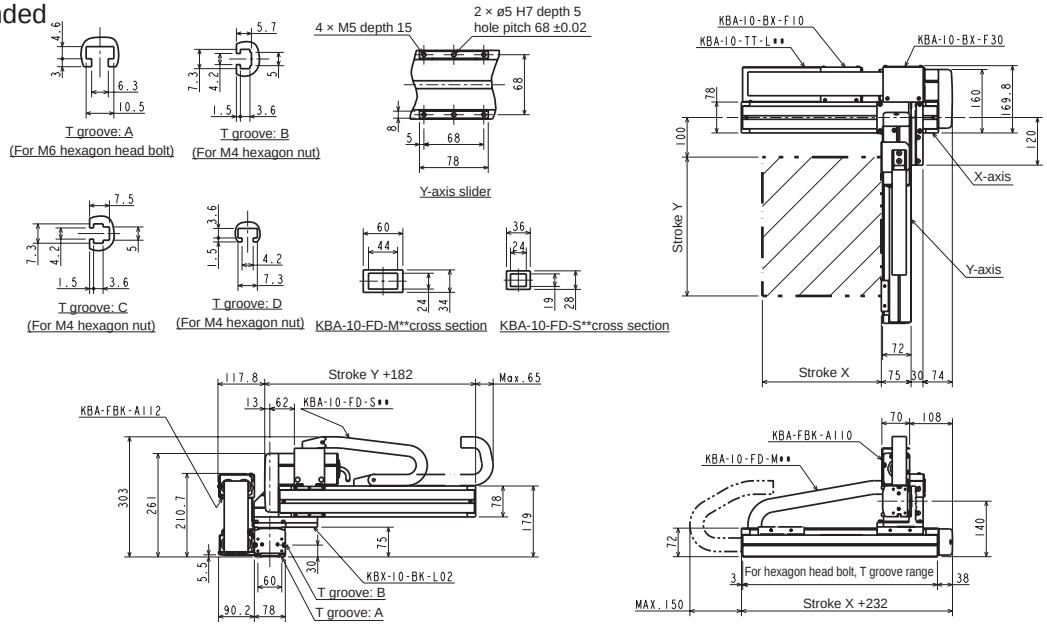

L: Left-handed

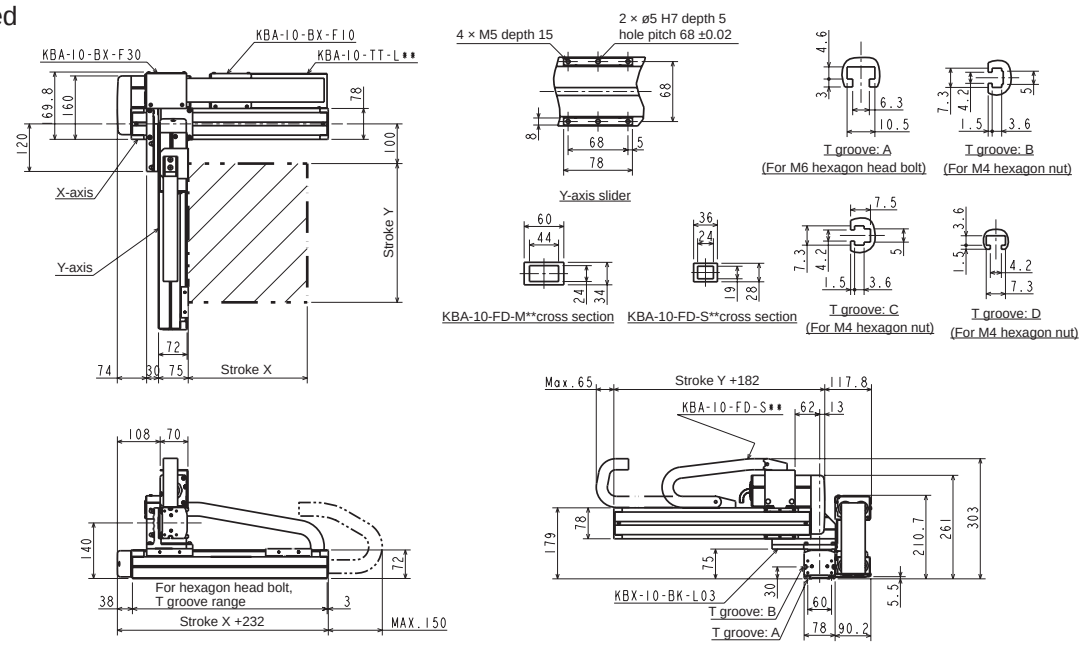

Orthogonal axis specifications: X-Y flexible duct specifications

Specifications

Descriptions		X-axis	Y-axis
Axis		KBX-30E-ST-M20N-□5	KBX-10E-ST-M20N-□0
Stroke 100 mm units	mm	150 to 1250	100 to 800
Max. speed	mm/s	1200 (*1)	1200 (*1)
Repeatability	mm	±0.01	
Ball screw lead	mm	20	20
Motor size	W	100	100

Acceleration/deceleration time to the max. speed setting: 0.48 sec or greater

Ball screw drive

X-axis: ball screw drive
Straight motor axis
Y-axis: ball screw drive
Straight motor axis

(*1) For the following stroke, max. speed varies

	Stroke (mm)	Max. speed (mm/s)
X-axis	750	1000
	850	800
	950 to 1050	600
	1150 to 1250	400
Y-axis	700	1000
	800	800

Max. load capacity (kg)	Y-axis stroke							
	100 mm	200 mm	300 mm	400 mm	500 mm	600 mm	700 mm	800 mm
	13.0	12.0	11.0	10.0	8.0	6.0	3.0	2.0

Dimensions

R: Right-handed

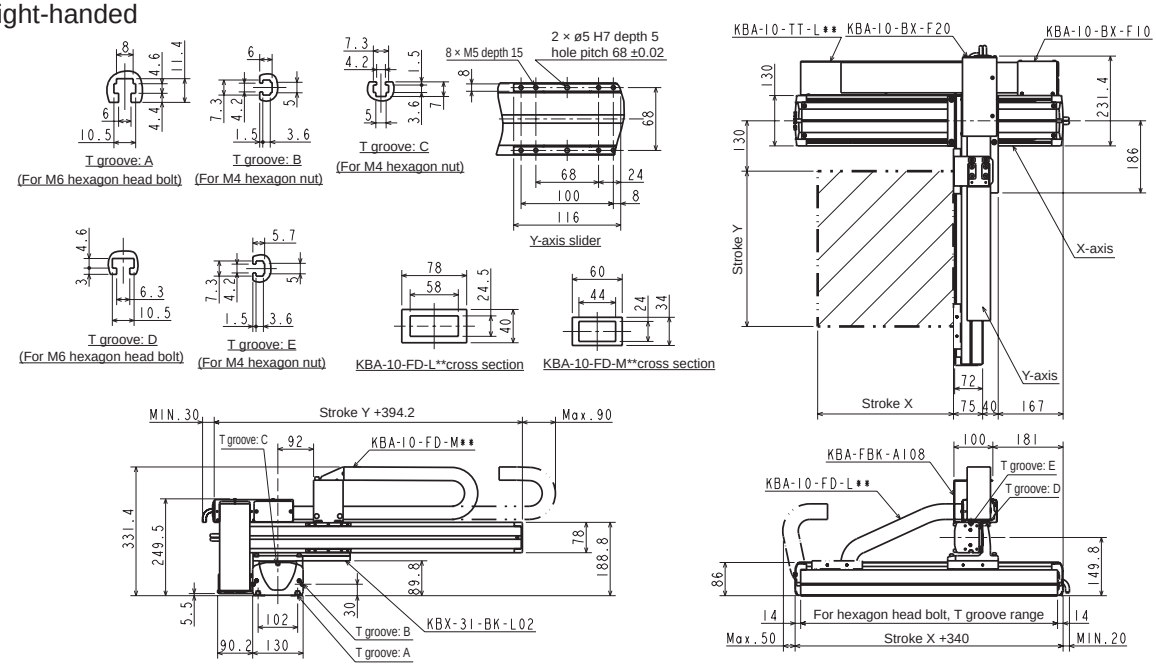

L: Left-handed

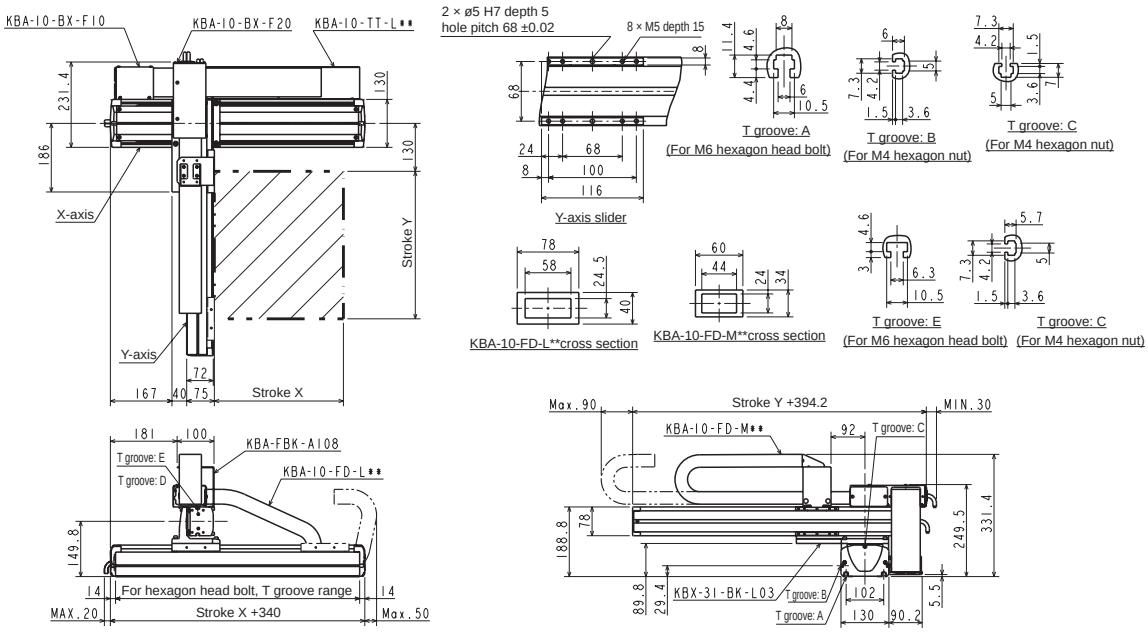

Orthogonal axis specifications: X-Y flexible duct specifications

Specifications

Descriptions		X-axis	Y-axis
Axis		KBX-30E-U□-M20N-□0	KBX-10E-U□-M20N-□0
Stroke 100 mm units	mm	100 to 1200	100 to 800
Max. speed	mm/s	1200 (*1)	1200 (*1)
Repeatability	mm	±0.01	
Ball screw lead	mm	20	20
Motor size	W	100	100

Acceleration/deceleration time to the max. speed setting: 0.48 sec or greater

Ball screw drive

X-axis: ball screw drive
Motor: Left (R)/Right (L)
Y-axis: ball screw drive
Motor: Right (R)/Left (L)

(*1) For the following stroke, max. speed varies

	Stroke (mm)	Max. speed (mm/s)
X-axis	700	1000
	800	800
	900 to 1000	600
	1100 to 1200	400
Y-axis	700	1000
	800	800

Max. load capacity (kg)	Y-axis stroke							
	100 mm	200 mm	300 mm	400 mm	500 mm	600 mm	700 mm	800 mm
	13.0	12.0	11.0	10.0	8.0	6.0	3.0	2.0

Dimensions

R: Right-handed

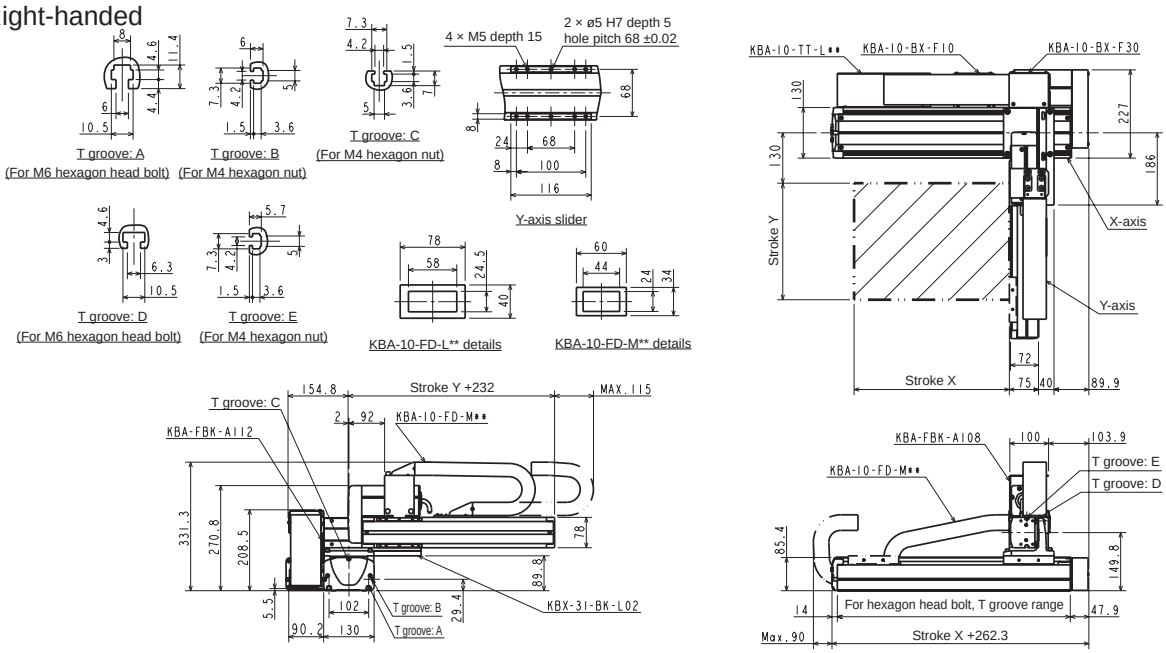

L: Left-handed

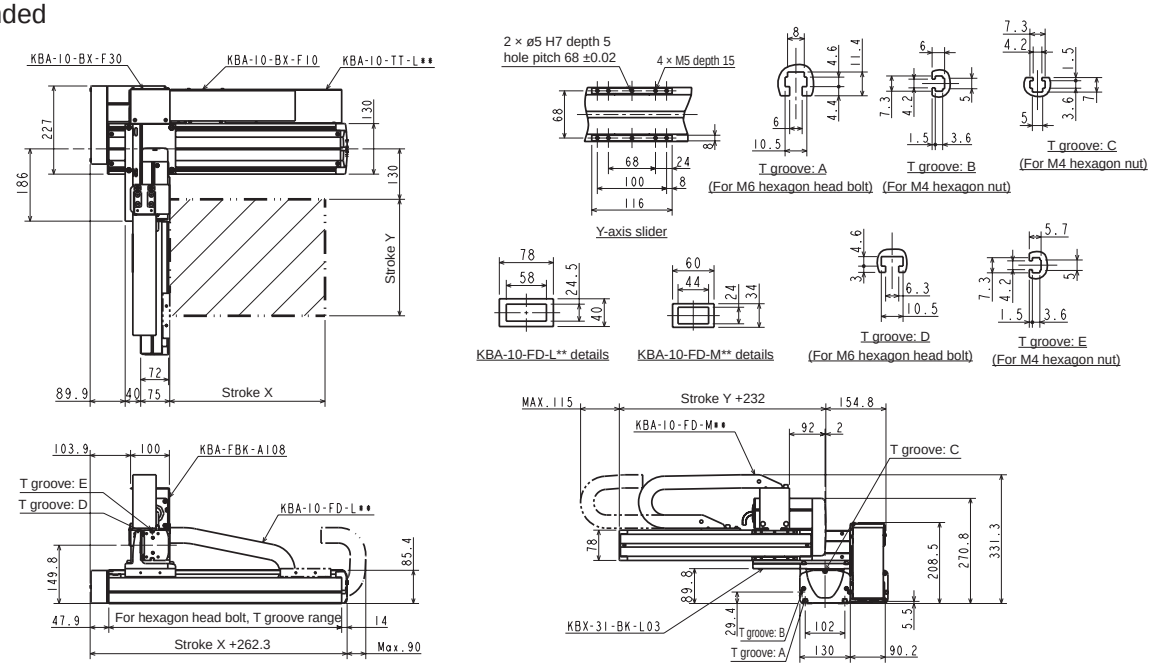

Orthogonal axis specifications: X-Y flexible duct specifications

Specifications

Descriptions		X-axis	Y-axis
Axis		KBX-30F-ST-M20N-□0	KBX-10E-ST-M20N-□0
Stroke 100 mm units	mm	100 to 1200	100 to 800
Max. speed	mm/s	1200 (*1)	1200 (*1)
Repeatability	mm	±0.01	
Ball screw lead	mm	20	20
Motor size	W	200	100

Acceleration/deceleration time to the max. speed setting: 0.36 sec or greater

Ball screw drive

X-axis: ball screw drive
Straight motor axis
Y-axis: ball screw drive
Straight motor axis

(*1) For the following stroke, max. speed varies

	Stroke (mm)	Max. speed (mm/s)
X-axis	700	1000
	800	800
	900 to 1000	600
	1100 to 1200	400
Y-axis	700	1000
	800	800

Max. load capacity (kg)	Y-axis stroke							
	100 mm	200 mm	300 mm	400 mm	500 mm	600 mm	700 mm	800 mm
	15.0	15.0	14.0	11.0	8.0	6.0	4.0	2.0

Dimensions

R: Right-handed

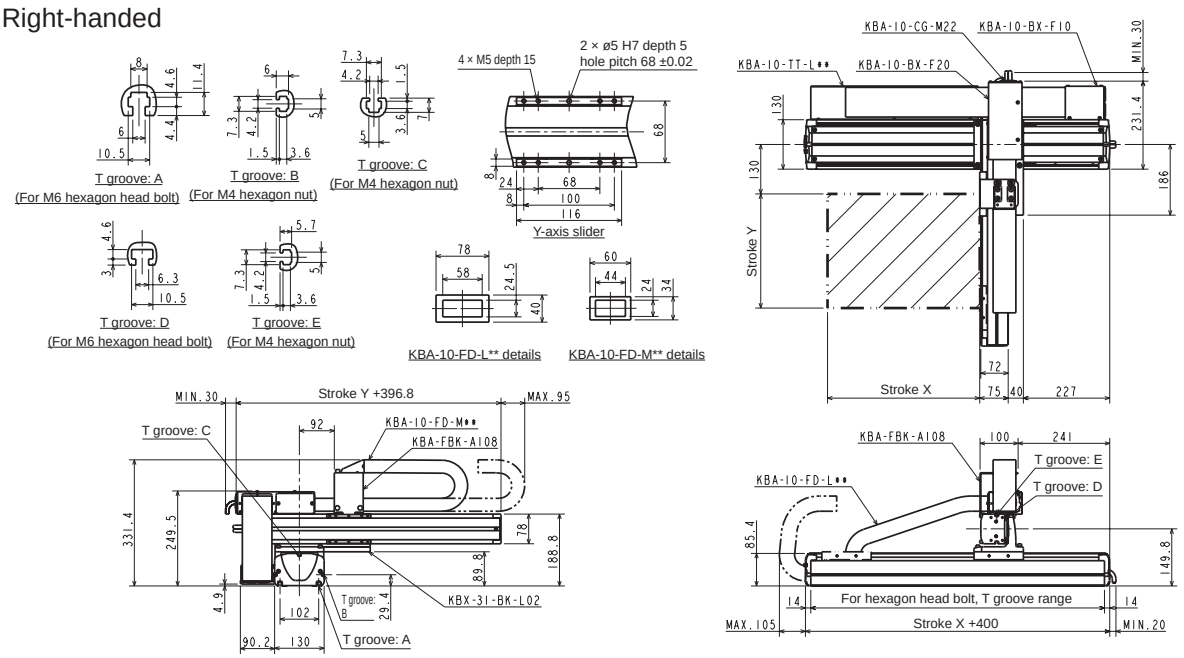

L: Left-handed

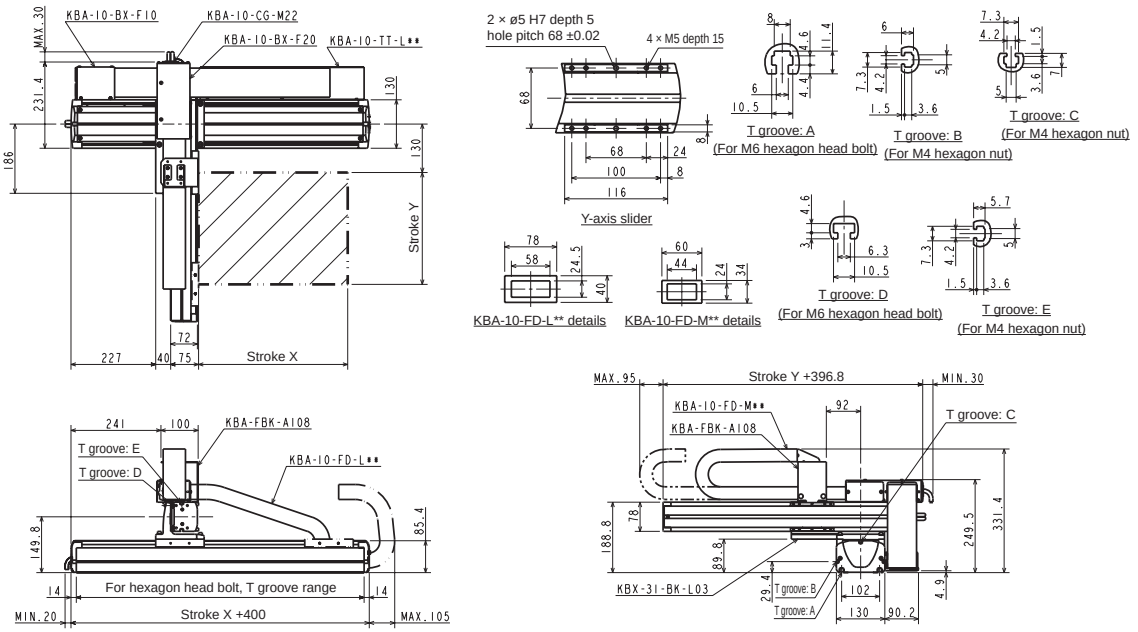

Orthogonal axis specifications: X-Y flexible duct specifications

Specifications

Descriptions		X-axis	Y-axis
Axis		KBX-30F-U□-M20N-□0	KBX-10E-U□-M20N-□0
Stroke 100 mm units	mm	100 to 1200	100 to 800
Max. speed	mm/s	1200 (*1)	1200 (*1)
Repeatability	mm	±0.01	
Ball screw lead	mm	20	20
Motor size	W	200	100

Acceleration/deceleration time to the max. speed setting: 0.36 sec or greater

Ball screw drive

X-axis: ball screw drive
Motor: Left (R)/Right (L)
Y-axis: ball screw drive
Motor: Right (R)/Left (L)

(*1) For the following stroke, max. speed varies

	Stroke (mm)	Max. speed (mm/s)
X-axis	700	1000
	800	800
	900 to 1000	600
	1100 to 1200	400
Y-axis	700	1000
	800	800

Max. load capacity (kg)	Y-axis stroke							
	100 mm	200 mm	300 mm	400 mm	500 mm	600 mm	700 mm	800 mm
	15.0	15.0	14.0	11.0	8.0	6.0	4.0	2.0

Dimensions

R: Right-handed

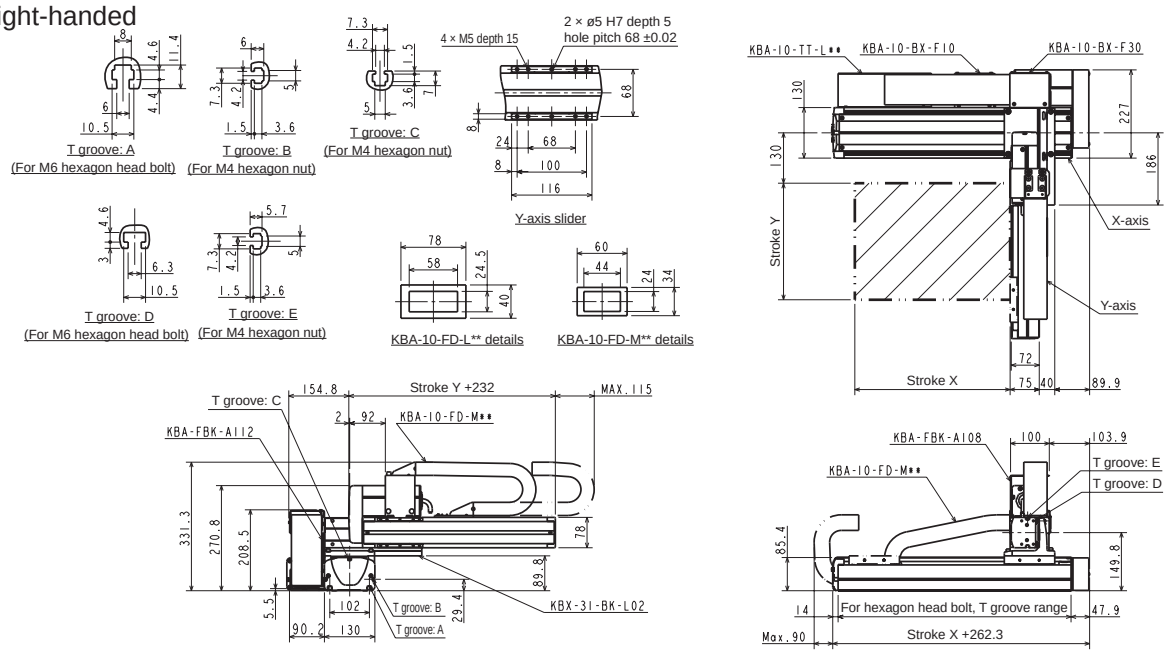

L: Left-handed

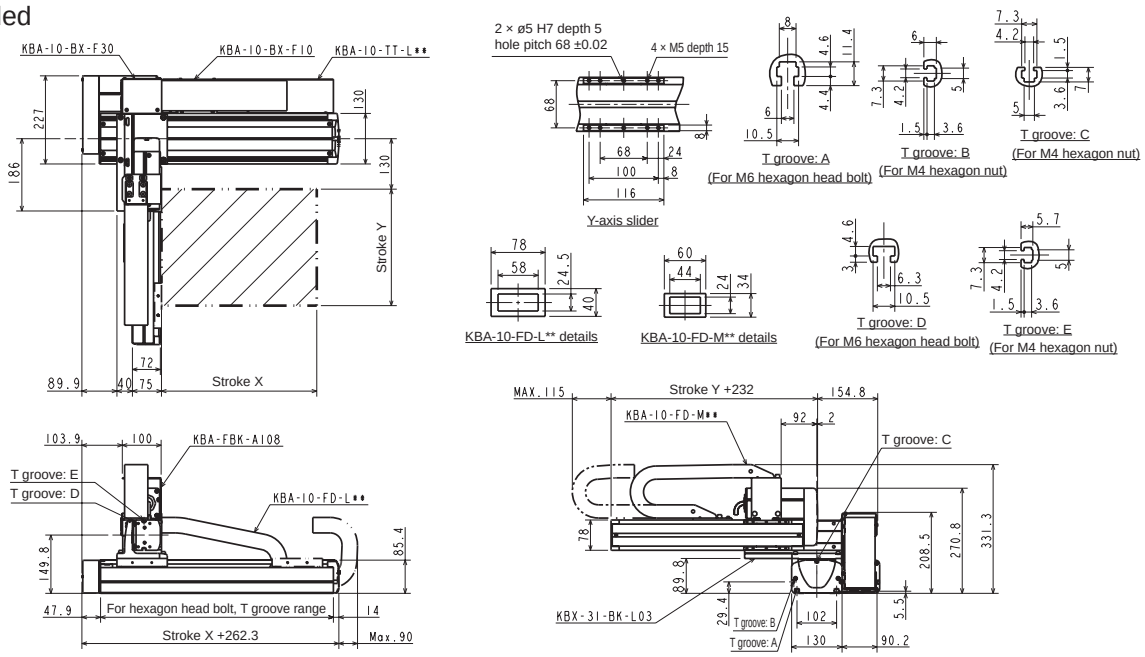

Orthogonal axis specifications: X-Y flexible duct specifications

Specifications

Descriptions		X-axis	Y-axis
Axis		KBX-50F-ST-M20N-□0	KBX-30E-ST-M20N-□5
Stroke 100 mm units	mm	200 to 1600	150 to 1050
Max. speed	mm/s	1200 (*1)	1200 (*1)
Repeatability	mm	±0.01	
Ball screw lead	mm	20	20
Motor size	W	200	100

Acceleration/deceleration time to the max. speed setting: 0.36 sec or greater

Ball screw drive

X-axis: ball screw drive, Straight motor axis
Y-axis: ball screw drive, Straight motor axis

(*1) For the following stroke, max. speed varies

	Stroke (mm)	Max. speed (mm/s)
X-axis	700 to 800	1100
	900 to 1000	1000
	1100 to 1200	700
	1300	500
	1400	400
	1500	300
	1600	300
Y-axis	750	1000
	850	800
	950 to 1050	600

Max. load capacity (kg)	Y-axis stroke									
	150 mm	250 mm	350 mm	450 mm	550 mm	650 mm	750 mm	850 mm	950 mm	1050 mm
	20.0	20.0	20.0	20.0	20.0	20.0	19.0	17.0	14.0	11.0

Dimensions

R: Right-handed

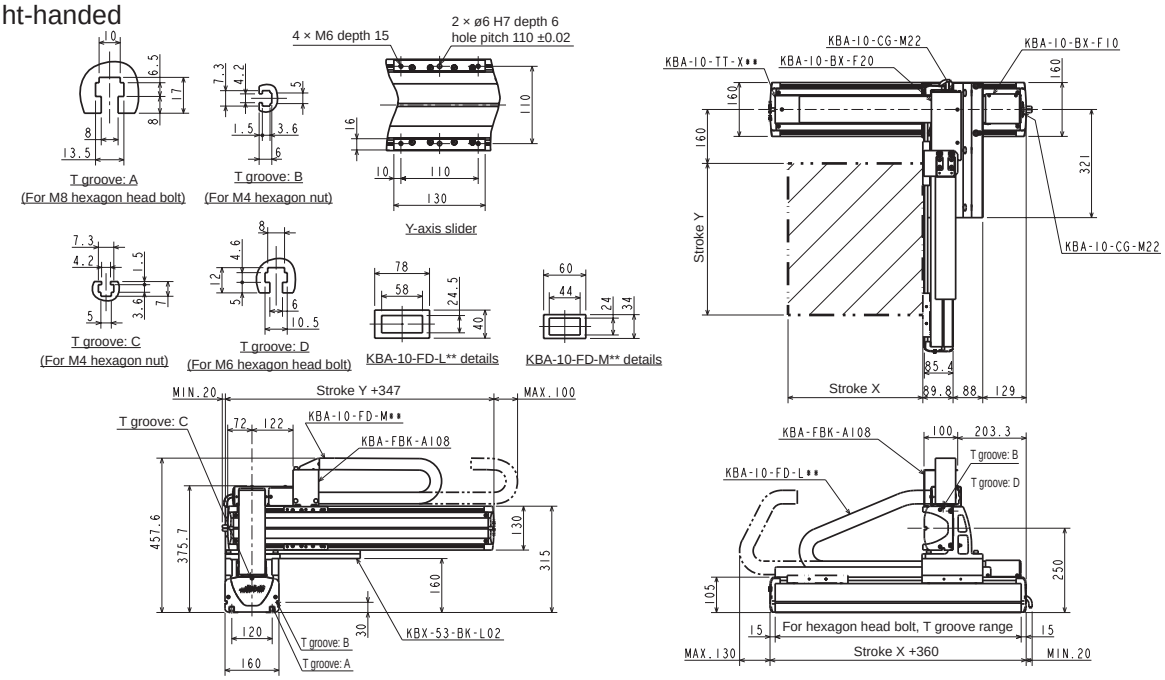

L: Left-handed

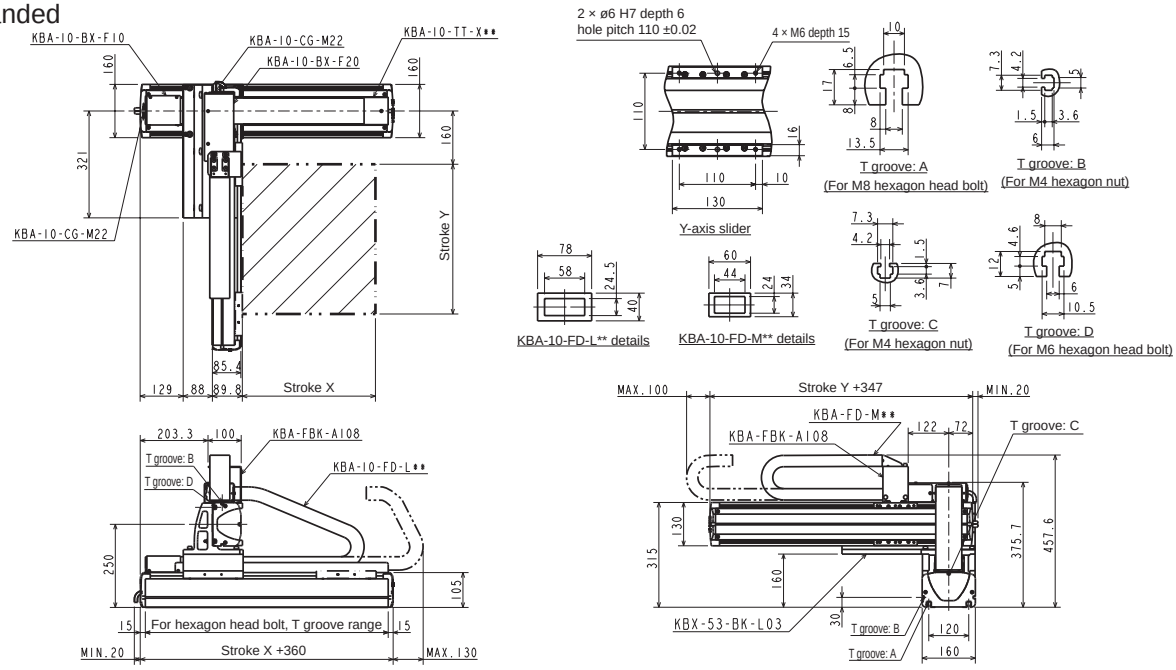

Orthogonal axis specifications: X-Y flexible duct specifications

Specifications

Descriptions		X-axis	Y-axis
Axis		KBX-50F-U□-M20N-□0	KBX-30E-ST-M20N-□5
Stroke 100 mm units	mm	200 to 1600	150 to 1050
Max. speed	mm/s	1200 (*1)	1200 (*1)
Repeatability	mm	±0.01	
Ball screw lead	mm	20	20
Motor size	W	200	100

Acceleration/deceleration time to the max. speed setting: 0.36 sec or greater

Ball screw drive

X-axis: ball screw drive, Motor: Left (R)/Right (L)
Y-axis: ball screw drive, Straight mounted motor

(*1) For the following stroke, max. speed varies

	Stroke (mm)	Max. speed (mm/s)
X-axis	700 to 800	1100
	900 to 1000	1000
	1100 to 1200	700
	1300	500
	1400	400
	1500	300
	1600	300
Y-axis	750	1000
	850	800
	950 to 1050	600

Max. load capacity (kg)	Y-axis stroke									
	150 mm	250 mm	350 mm	450 mm	550 mm	650 mm	750 mm	850 mm	950 mm	1050 mm
	20.0	20.0	20.0	20.0	20.0	20.0	19.0	17.0	14.0	11.0

Dimensions

R: Right-handed

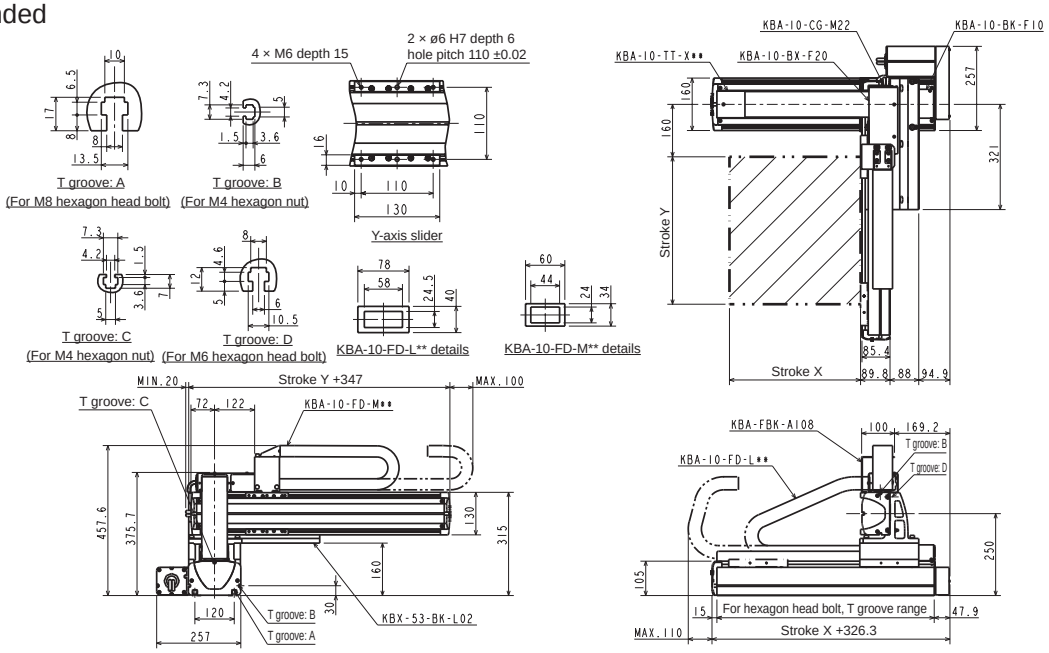

L: Left-handed

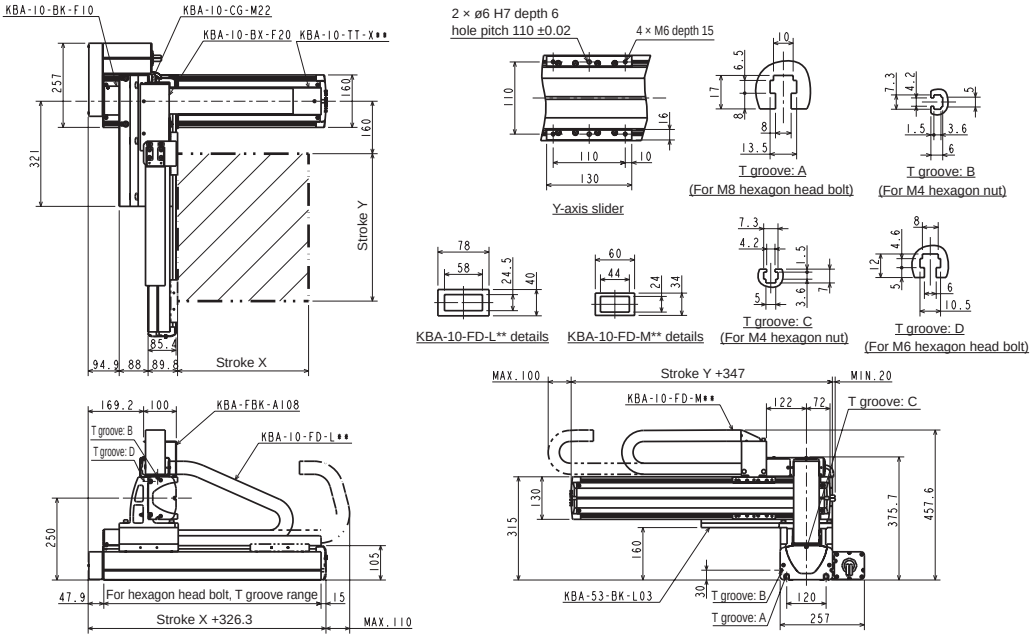

Orthogonal axis specifications: X-Y flexible duct specifications

Specifications

Descriptions		X-axis	Y-axis
Axis		KBX-50F-ST-M20N-□0	KBX-30F-ST-M20N-□0
Stroke 100 mm units	mm	200 to 1600	100 to 1000
Max. speed	mm/s	1200 (*1)	1200 (*1)
Repeatability	mm	±0.01	
Ball screw lead	mm	20	20
Motor size	W	200	200

Acceleration/deceleration time to the max. speed setting: 0.36 sec or greater

Ball screw drive

X-axis: ball screw drive, Straight motor axis
Y-axis: ball screw drive, Straight motor axis

(*1) For the following stroke, max. speed varies

	Stroke (mm)	Max. speed (mm/s)
X-axis	700 to 800	1100
	900 to 1000	1000
	1100 to 1200	700
	1300	500
	1400	400
	1500	300
	1600	300
Y-axis	700	1000
	800	800
	900 to 1000	600

Max. load capacity (kg)	Y-axis stroke									
	100 mm	200 mm	300 mm	400 mm	500 mm	600 mm	700 mm	800 mm	900 mm	1000 mm
	40.0 (31.0)	40.0 (30.0)	33.0 (29.0)	31.0 (28.0)	27.0	23.0	20.0	17.0	14.0	12.0

When using the X-axis at speeds exceeding 1,000 mm/s, max. load capacity is the value in ( ).

Dimensions

R: Right-handed

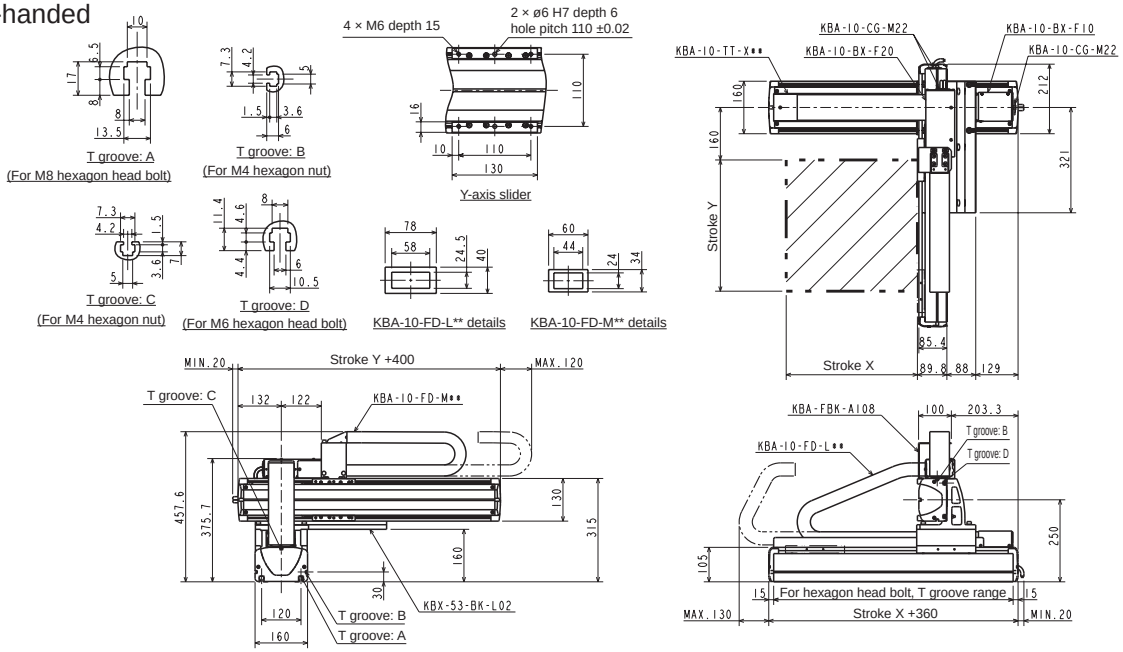

L: Left-handed

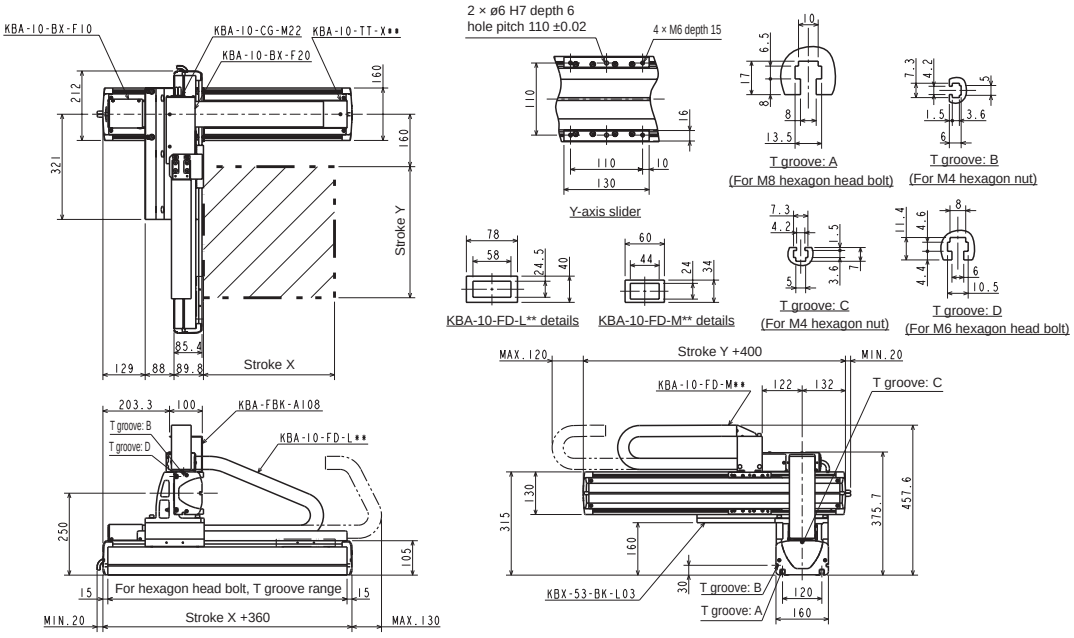

Orthogonal Axis Specifications: X-Y Flexible Duct Specifications

Specifications

Item		X-axis	Y-axis
Axis		KBX-50F-U□-M20N-□0	KBX-30F-ST-M20N-□0
Stroke 100 mm units	mm	200 to 1500	100 to 1000
Max. speed	mm/s	1200 (*1)	1200 (*1)
Repeatability	mm	±0.01	
Ball screw lead	mm	20	20
Motor size	W	200	200

Acceleration/deceleration time to the max. speed setting: 0.36 sec or greater

Ball screw drive

X-axis: ball screw drive, motor wrap
Y-axis:Ball screw drive, Straight motor axis

(*1)For the following strokes, maximum speed varies

	Stroke (mm)	Max. speed (mm/s)
X-axis	700 to 800	1100
	900 to 1000	1000
	1100 to 1200	700
	1300	500
	1400	400
	1500	300
Y-axis	700	1000
	800	800
	900 to 1000	600

Max.workload (kg)	Y-axis stroke									
	100 mm	200 mm	300 mm	400 mm	500 mm	600 mm	700 mm	800 mm	900 mm	1000 mm
	40.0 (31.0)	40.0 (30.0)	33.0 (29.0)	31.0 (28.0)	27.0	23.0	20.0	17.0	14.0	12.0

When using the X-axis at speeds exceeding 1000mm/s, max. load capacity is the value in ( ).

Dimensions

R: Right-handed

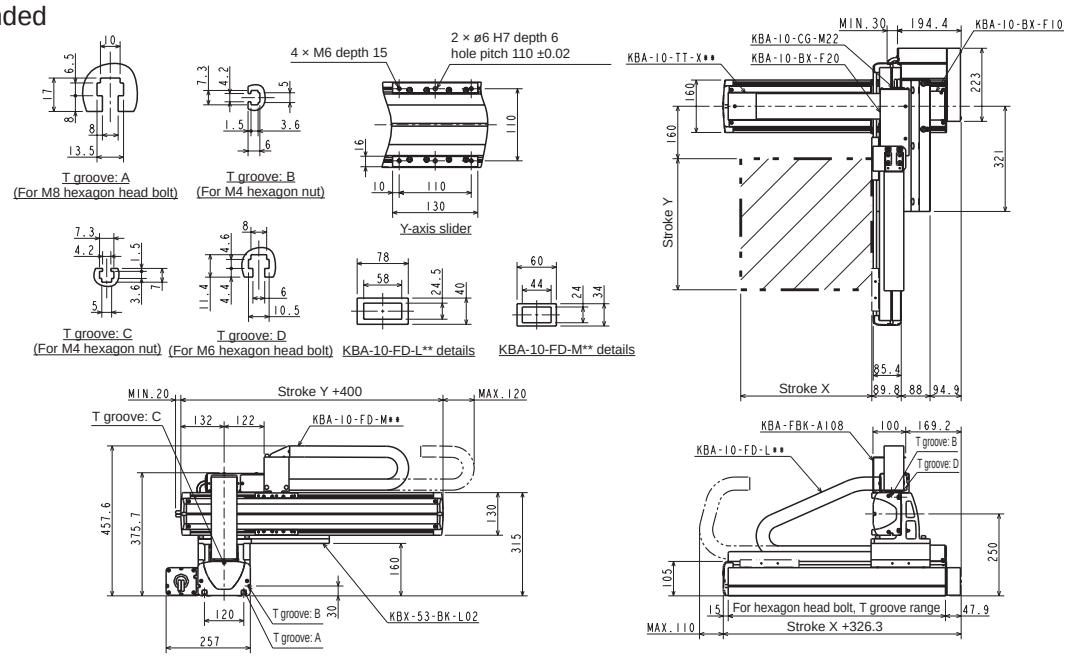

L: Left-handed

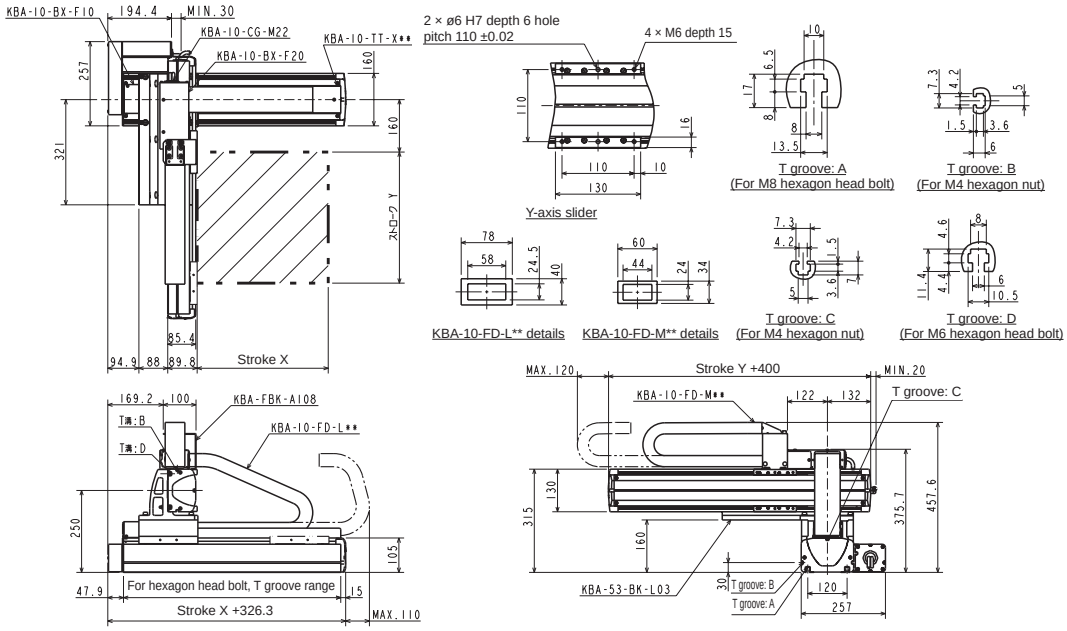

Orthogonal axis specifications: X-Y flexible duct specifications

Specifications

Descriptions		X-axis	Y-axis
Axis		KBX-50G-ST-M20N-□0	KBX-50F-ST-M20N-□0
Stroke 100 mm units	mm	200 to 1600	200 to 1000
Max. speed	mm/s	1200 (*1)	1200 (*1)
Repeatability	mm	±0.01	
Ball screw lead	mm	20	20
Motor size	W	400	200

Acceleration/deceleration time to the max. speed setting: 0.36 sec or greater

Ball screw drive

X-axis: ball screw drive, Straight motor axis
Y-axis: ball screw drive, Straight motor axis

(*1) For the following stroke, max. speed varies

	Stroke (mm)	Max. speed (mm/s)
X-axis	700 to 800	1100
	900 to 1000	1000
	1100 to 1200	700
	1300	500
	1400	400
	1500	300
	1600	300
Y-axis	700 to 800	1100
	900 to 1000	1000

Max. load capacity (kg)	Y-axis stroke								
	200 mm	300 mm	400 mm	500 mm	600 mm	700 mm	800 mm	900 mm	1000 mm
	60.0 (50.0)	53.5 (50.0)	45.0	38.0	32.5	27.5	23.0	19.0	13.0

Regenerative discharge unit (KCA-ABSU-4000) is required for the X-axis.
When using the X-axis at speeds exceeding 1,000 mm/s, max. load capacity is the value in ( ).

Dimensions

R: Right-handed

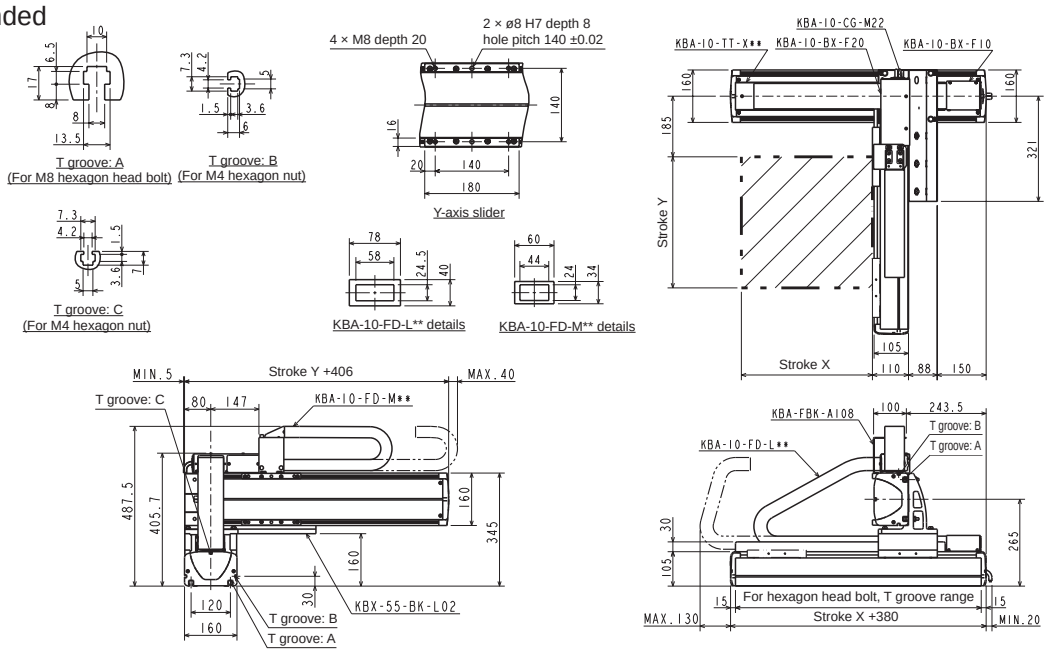

L: Left-handed

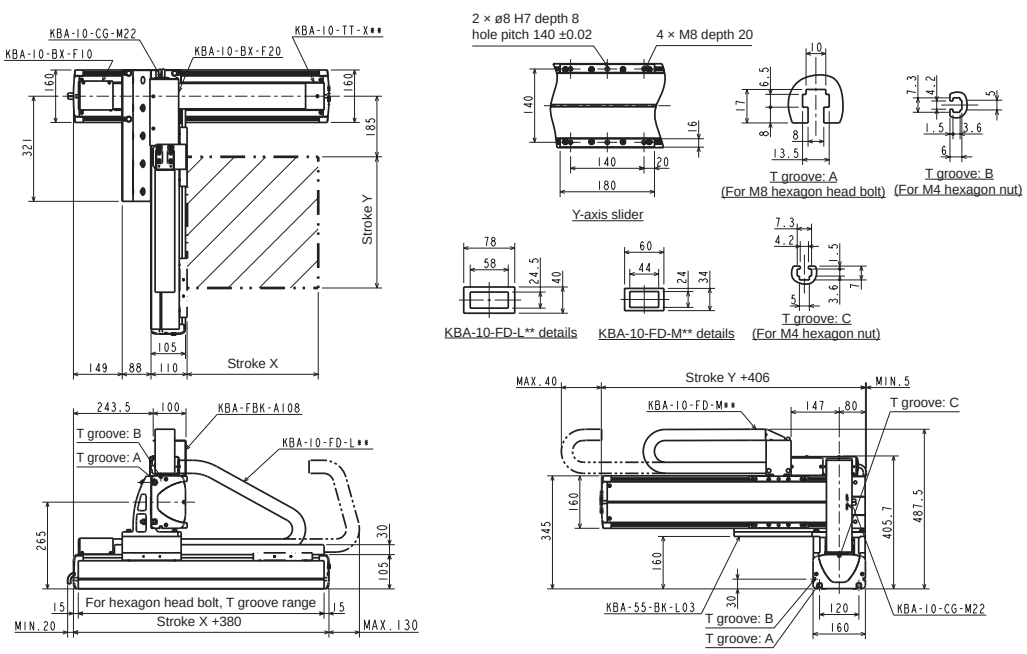

Orthogonal axis specifications: X-Y flexible duct specifications

Specifications

Descriptions		X-axis	Y-axis
Axis		KBX-60J-ST-M20N-□0	KBX-50G-ST-M20N-□0
Stroke 100 mm units	mm	200 to 1700	200 to 1500
Max. speed	mm/s	900 (*1)	1200 (*1)
Repeatability	mm	±0.01	
Ball screw lead	mm	20	20
Motor size	W	750	400

Acceleration/deceleration time to the max. speed setting: 0.36 sec or greater

Ball screw drive

X-axis: ball screw drive, Straight motor axis
Y-axis: ball screw drive, Straight motor axis
(*1) For the following stroke, max. speed varies

	Stroke (mm)	Max. speed (mm/s)
X-axis	1100	700
	1200	600
	1300	500
	1400 to 1500	400
	1600 to 1700	300
Y-axis	700 to 800	1100
	900 to 1000	1000
	1100 to 1200	700
	1300	500
	1400	400
	1500	300

Max. load capacity (kg)	Y-axis stroke													
	200 mm	300 mm	400 mm	500 mm	600 mm	700 mm	800 mm	900 mm	1000 mm	1100 mm	1200 mm	1300 mm	1400 mm	1500 mm
	100.0	100.0	89.0	77.5	68.0	60.0	53.0	47.0	42.0	33.0	26.0	21.0	17.0	14.0

The regenerative discharge unit is required for all axes.
1) X-axis: regenerative discharge unit: KCA-ABSU-8000
2) Y-axis: regenerative discharge unit: KCA-ABSU-4000

Dimensions

R: Right-handed

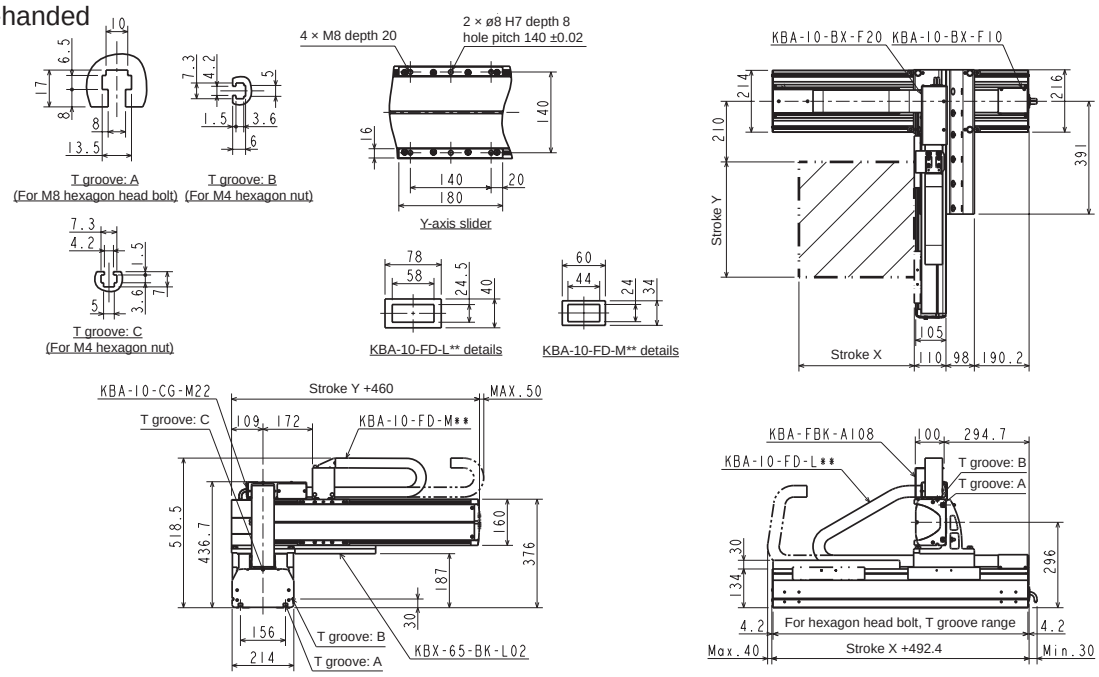

L: Left-handed

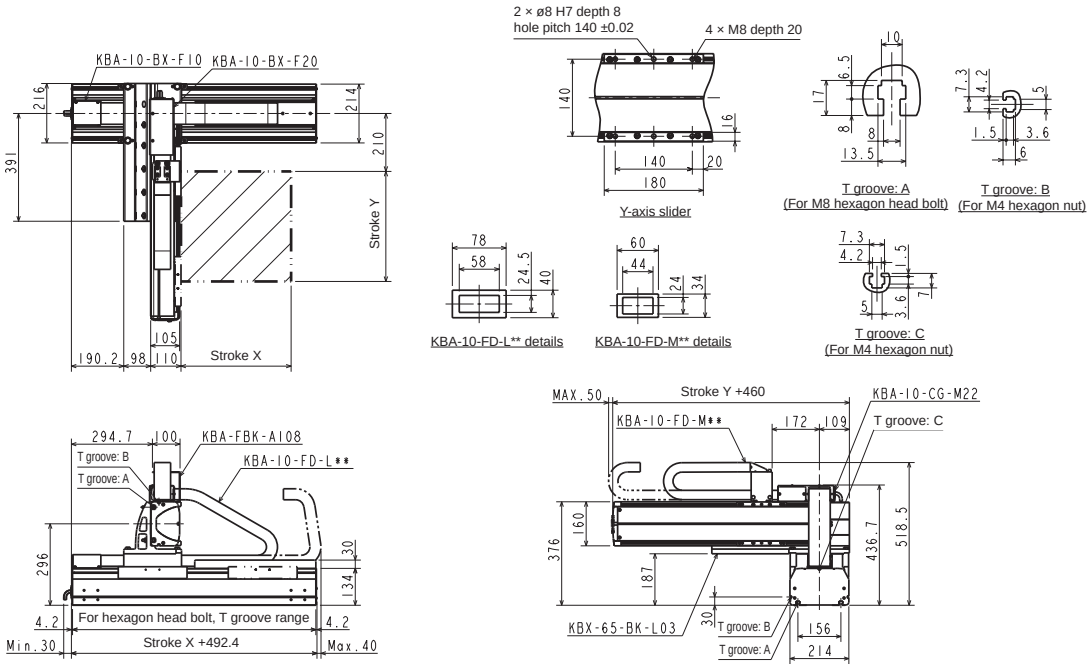

Orthogonal axis specifications: X-Y flexible duct specifications

Specifications

Descriptions		X-axis	Y-axis
Axis		KBX-10E-BT-M21N-□0	KBX-10E-B□-S21N-□5
Stroke 100 mm units	mm	100 to 2500	150 to 650
Max. speed	mm/s	1000	1000
Repeatability	mm	±0.04	
Ball screw lead	mm	21 or equiv.	21 or equiv.
Motor size	W	100	100

Acceleration/deceleration time to the max. speed setting: 0.4 sec or greater

Timing belt drive

X-axis: timing belt drive
Motor: Top (R)/(L)
Y-axis: timing belt drive
Motor: Right (R) /Left (L)

Max. load capacity (kg)	Y-axis stroke					
	150 mm	250 mm	350 mm	450 mm	550 mm	650 mm
	8.0	8.0	6.0	5.0	3.0	1.0

Dimensions

R: Right-handed

The value in ( ) is compatible with X-axis stroke 1,050 mm or more

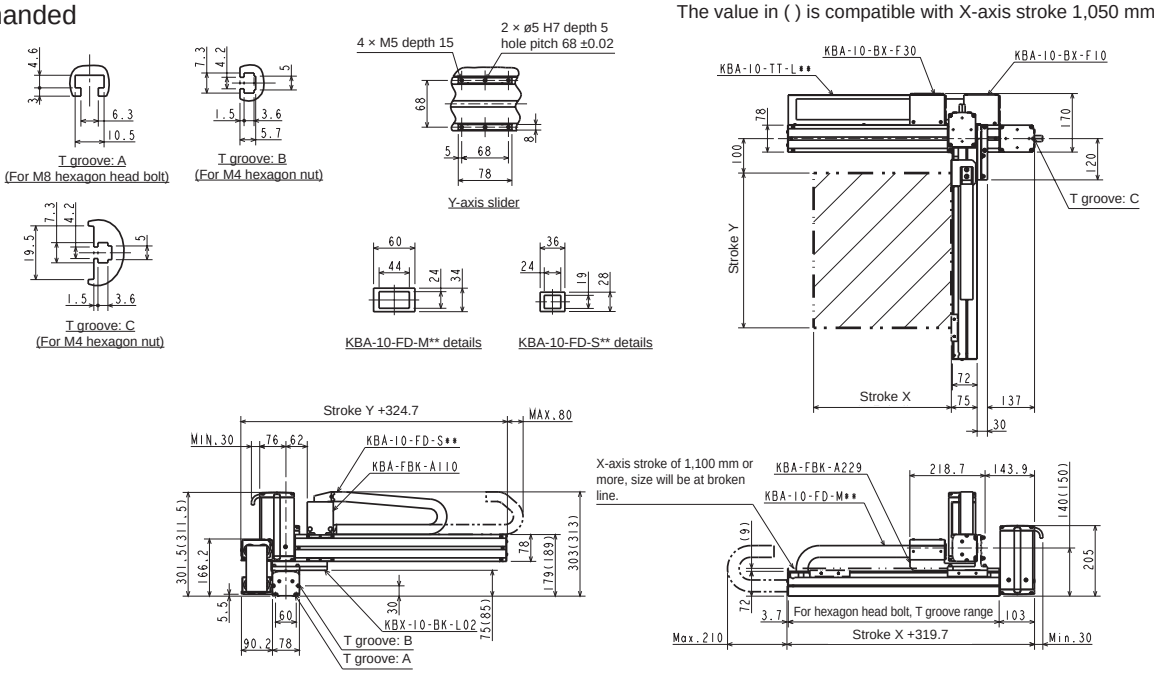

L: Left-handed

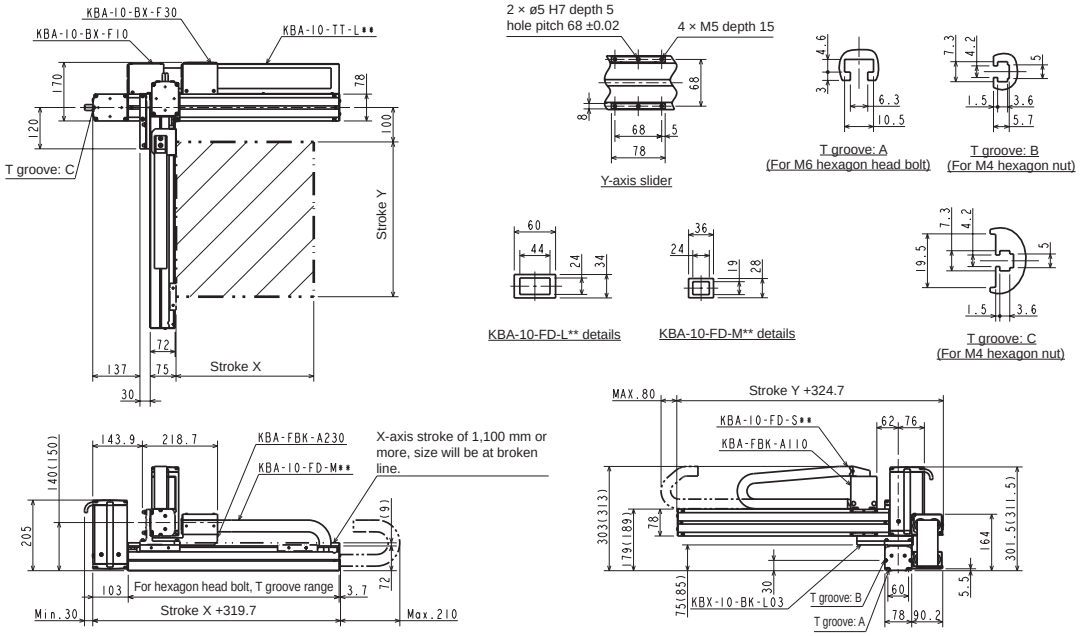

Orthogonal axis specifications: X-Y flexible duct specifications

Specifications

Descriptions		X-axis	Y-axis
Axis		KBX-10F-BT-M21N-□0	KBX-10E-B□-S21N-□5
Stroke 100 mm units	mm	100 to 2500	150 to 650
Max. speed	mm/s	1000	1000
Repeatability	mm	±0.04	
Ball screw lead	mm	21 or equiv.	21 or equiv.
Motor size	W	200	100

Acceleration/deceleration time to the max. speed setting: 0.3 sec or greater

Timing belt drive

X-axis: timing belt drive
Motor: Top (R)/(L)
Y-axis: timing belt drive
Motor: Right (R)/Left (L)

Max. load capacity (kg)	Y-axis stroke					
	150 mm	250 mm	350 mm	450 mm	550 mm	650 mm
	9.0	8.0	6.0	5.0	3.0	1.0

Dimensions

R: Right-handed

The value in ( ) is compatible with X-axis stroke 1,050 mm or more

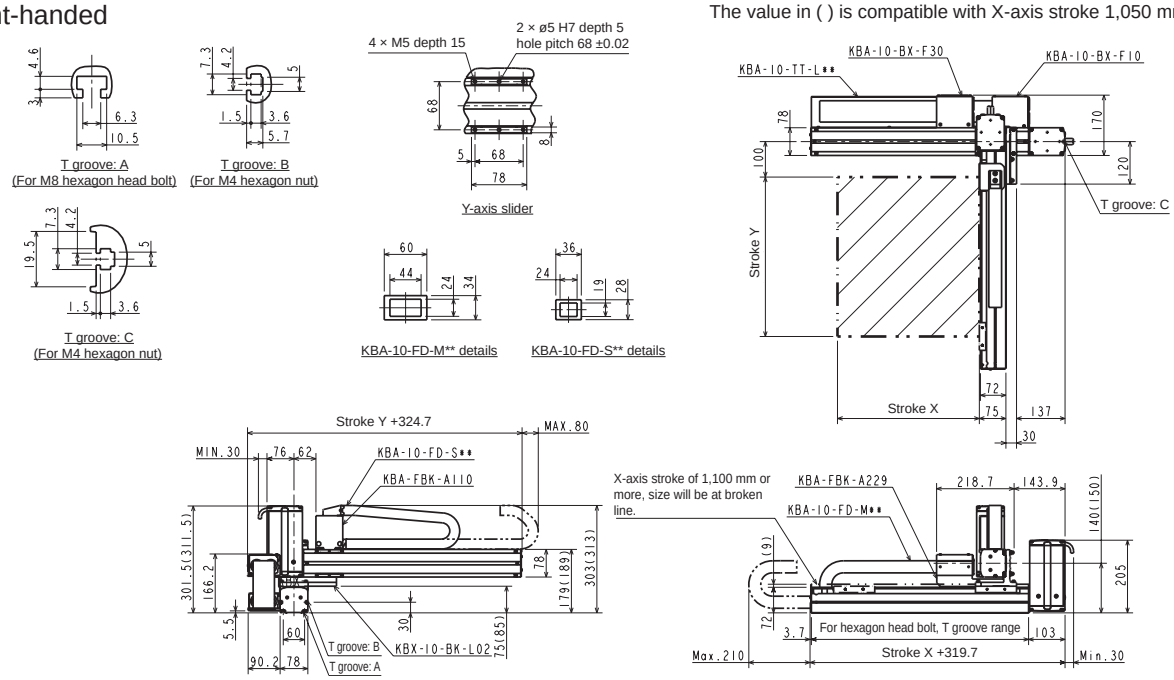

L: Left-handed

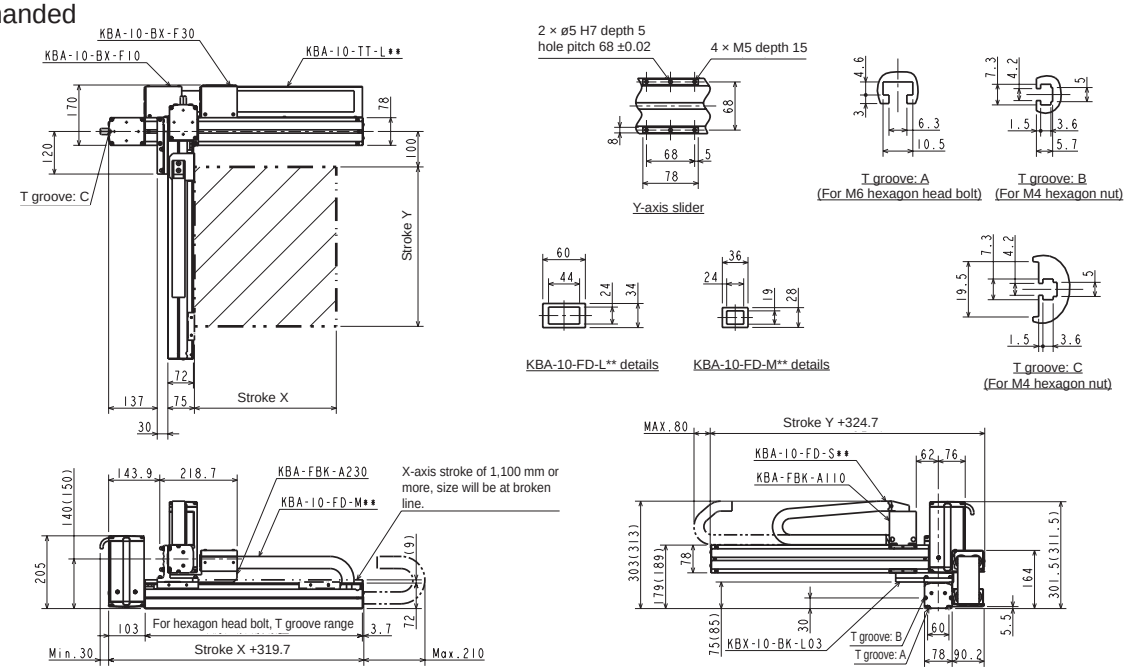

Orthogonal axis specifications: X-Y flexible duct specifications

Specifications

Descriptions		X-axis	Y-axis
Axis		KBX-30E-BT-M21N-□0	KBX-10E-B□-M21N-□0
Stroke 100 mm units	mm	100 to 3200	100 to 800
Max. speed	mm/s	1000	1000
Repeatability	mm	±0.04	
Ball screw lead	mm	21 or equiv.	21 or equiv.
Motor size	W	100	100

Acceleration/deceleration time to the max. speed setting: 0.3 sec or greater

Timing belt drive

X-axis: timing belt drive
Motor: Top (R)/(L)
Y-axis: timing belt drive
Motor: Right (R)/Left (L)

Max. load capacity (kg)	Y-axis stroke							
	100 mm	200 mm	300 mm	400 mm	500 mm	600 mm	700 mm	800 mm
	8.0	7.0	6.0	6.0	5.0	5.0	1.0	1.0

Dimensions

R: Right-handed

The value in ( ) is compatible with X-axis stroke 1,850 mm or more

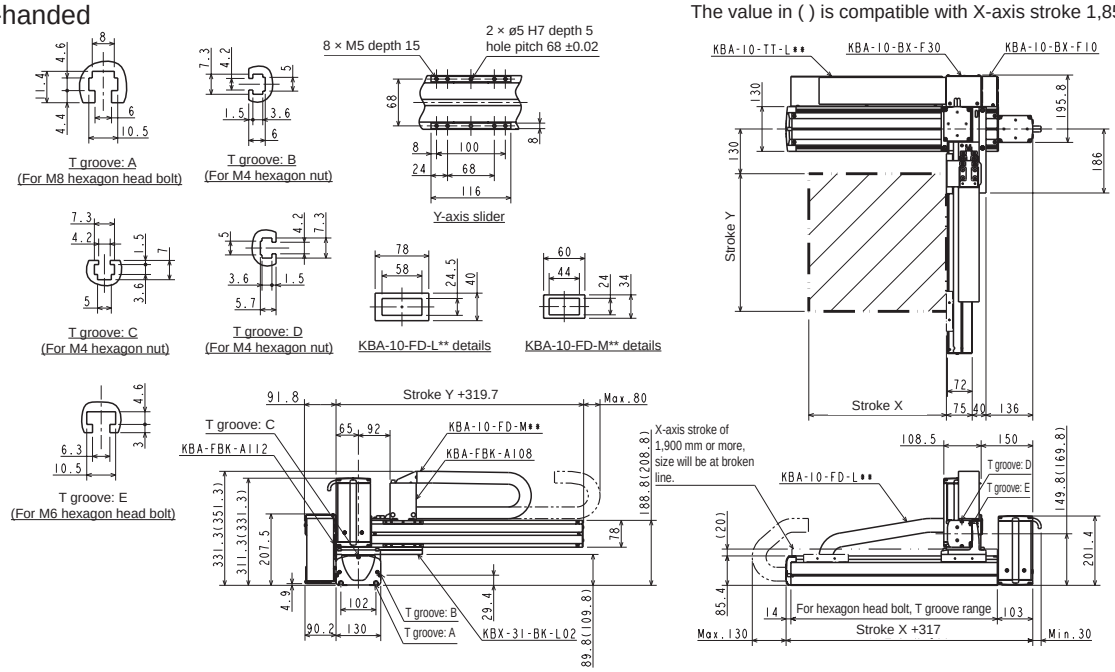

L: Left-handed

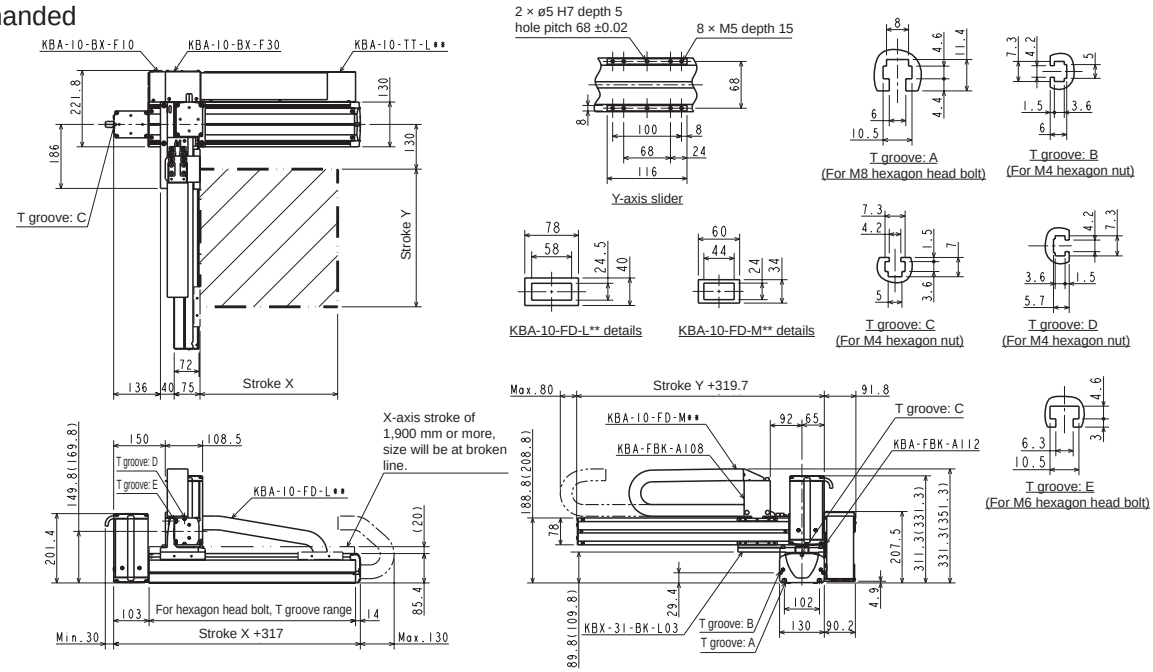

Orthogonal axis specifications: X-Y flexible duct specifications

Specifications

Descriptions		X-axis	Y-axis
Axis		KBX-30F-BT-M21N-□0	KBX-10E-B□-M21N-□0
Stroke 100 mm units	mm	100 to 3200	100 to 800
Max. speed	mm/s	1000	1000
Repeatability	mm	±0.04	
Ball screw lead	mm	21 or equiv.	21 or equiv.
Motor size	W	200	100

Acceleration/deceleration time to the max. speed setting: 0.3 sec or greater

Timing belt drive

X-axis: timing belt drive
Motor: Top (R)/(L)
Y-axis: timing belt drive
Motor: Right (R)/Left (L)

Max. load capacity (kg)	Y-axis stroke							
	100 mm	200 mm	300 mm	400 mm	500 mm	600 mm	700 mm	800 mm
	15.0	15.0	14.0	11.0	8.0	6.0	4.0	2.0

Dimensions

R: Right-handed

The value in ( ) is compatible with X-axis stroke 1,850 mm or more

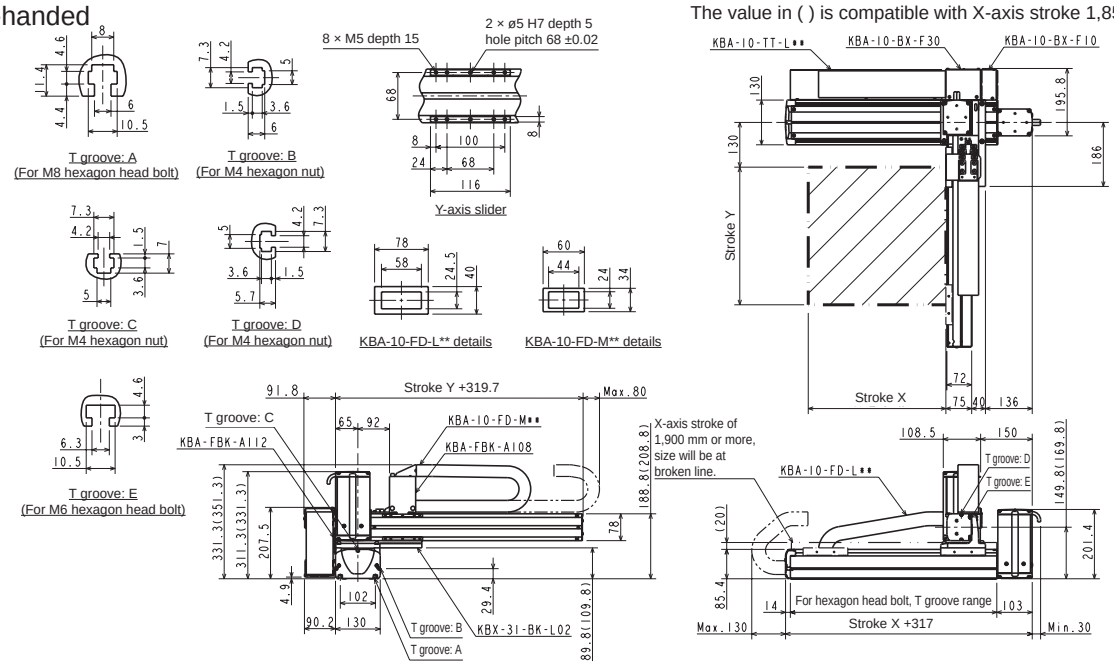

L: Left-handed

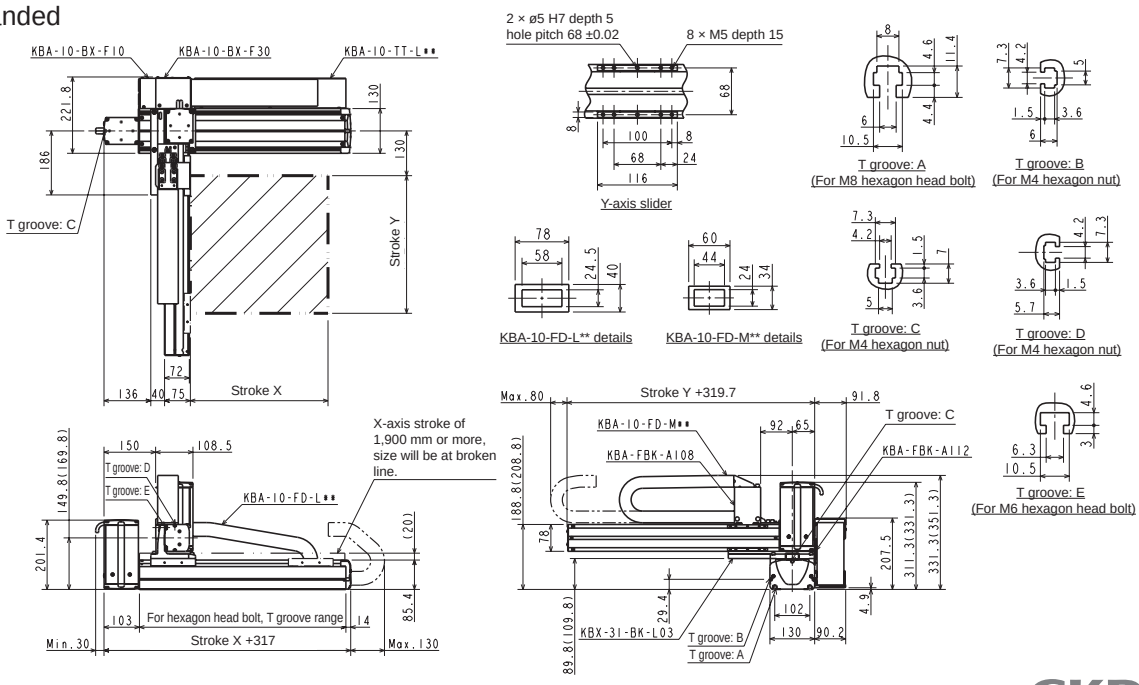

Orthogonal axis specifications: X-Y flexible duct specifications

Specifications

Descriptions		X-axis	Y-axis
Axis		KBX-30F-BT-M21N-□0	KBX-10F-B□-M21N-□0
Stroke 100 mm units	mm	100 to 3200	100 to 800
Max. speed	mm/s	1000	1000
Repeatability	mm	±0.04	
Ball screw lead	mm	21 or equiv.	21 or equiv.
Motor size	W	200	200

Acceleration/deceleration time to the max. speed setting: 0.3 sec or greater

Timing belt drive

X-axis: timing belt drive
Motor: Top (R)/(L)
Y-axis: timing belt drive
Motor: Right (R)/Left (L)

Max. load capacity (kg)	Y-axis stroke							
	100 mm	200 mm	300 mm	400 mm	500 mm	600 mm	700 mm	800 mm
	20.0	18.0	14.0	11.0	8.0	6.0	4.0	2.0

Dimensions

R: Right-handed

The value in ( ) is compatible with X-axis stroke 1,850 mm or more

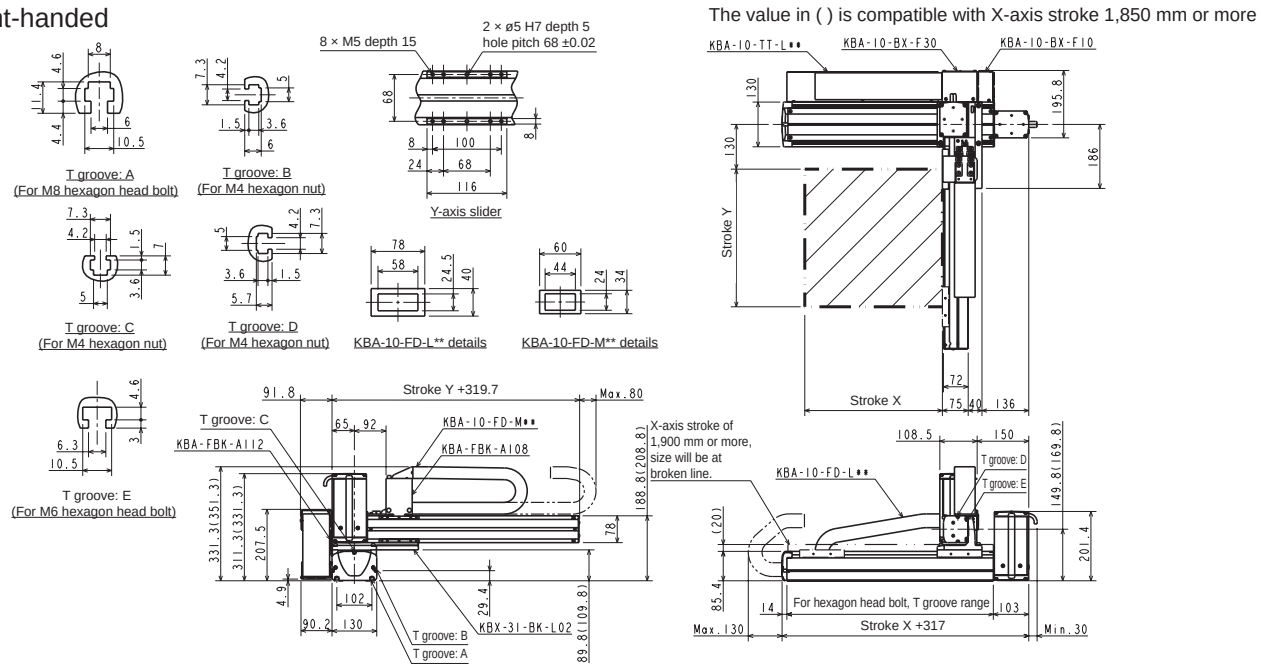

L: Left-handed

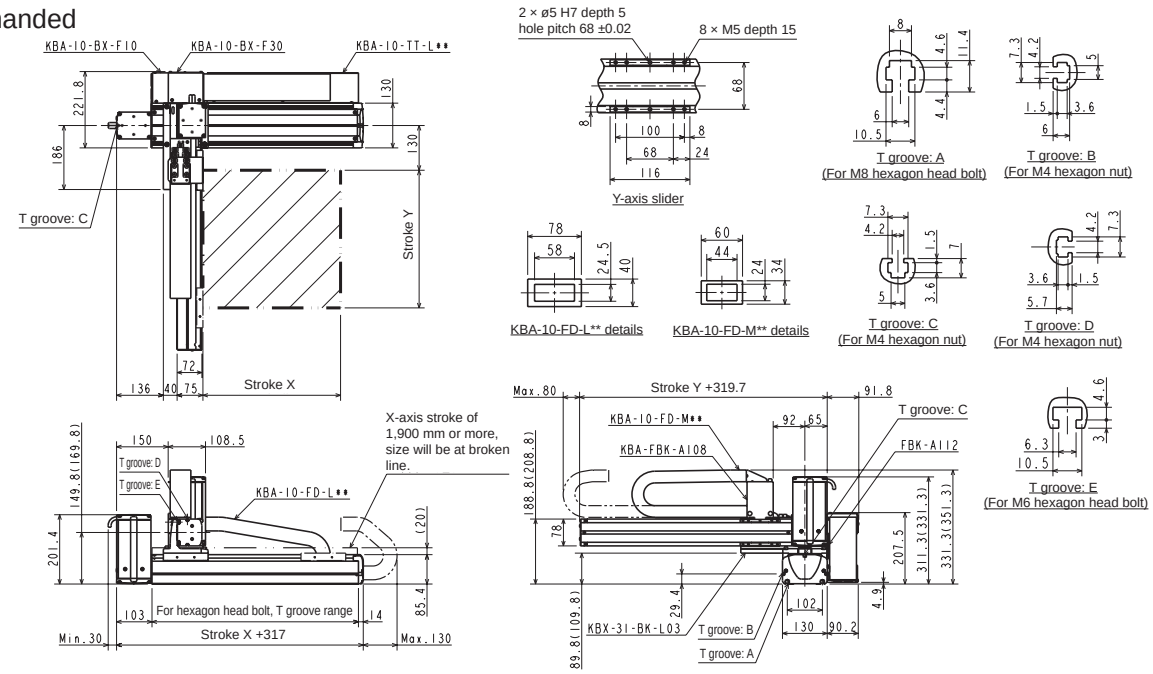

Orthogonal axis specifications: X-Y flexible duct specifications

Specifications

Descriptions		X-axis	Y-axis
Axis		KBX-50F-BT-M21N-□0	KBX-30E-B□-M21N-□0
Stroke 100 mm units	mm	200 to 3500	100 to 1000
Max. speed	mm/s	1000	1000
Repeatability	mm	±0.04	
Ball screw lead	mm	21 or equiv.	21 or equiv.
Motor size	W	200	100

Acceleration/deceleration time to the max. speed setting: 0.3 sec or greater

Timing belt drive

X-axis: timing belt drive
Motor: Top (R)/(L)
Y-axis: timing belt drive
Motor: Right (R)/Left (L)

Max. load capacity (kg)	Y-axis stroke									
	100 mm	200 mm	300 mm	400 mm	500 mm	600 mm	700 mm	800 mm	900 mm	1000 mm
	15.0	15.0	15.0	15.0	15.0	15.0	15.0	13.0	12.0	11.0

Dimensions

R: Right-handed

The value in ( ) is compatible with X-axis stroke 1,850 mm or more

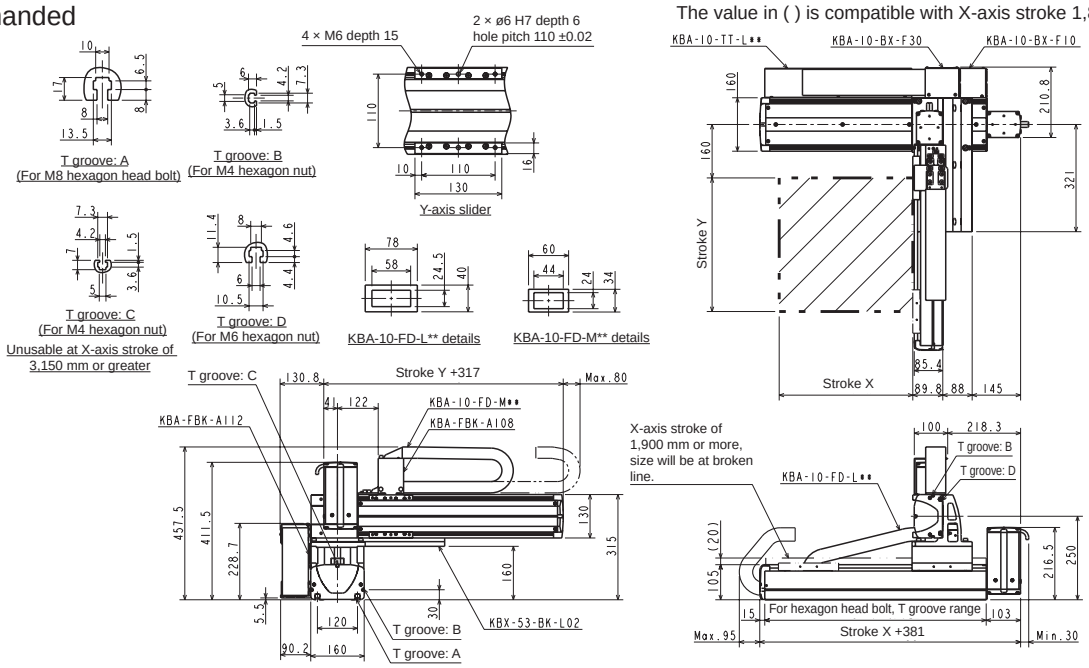

L: Left-handed

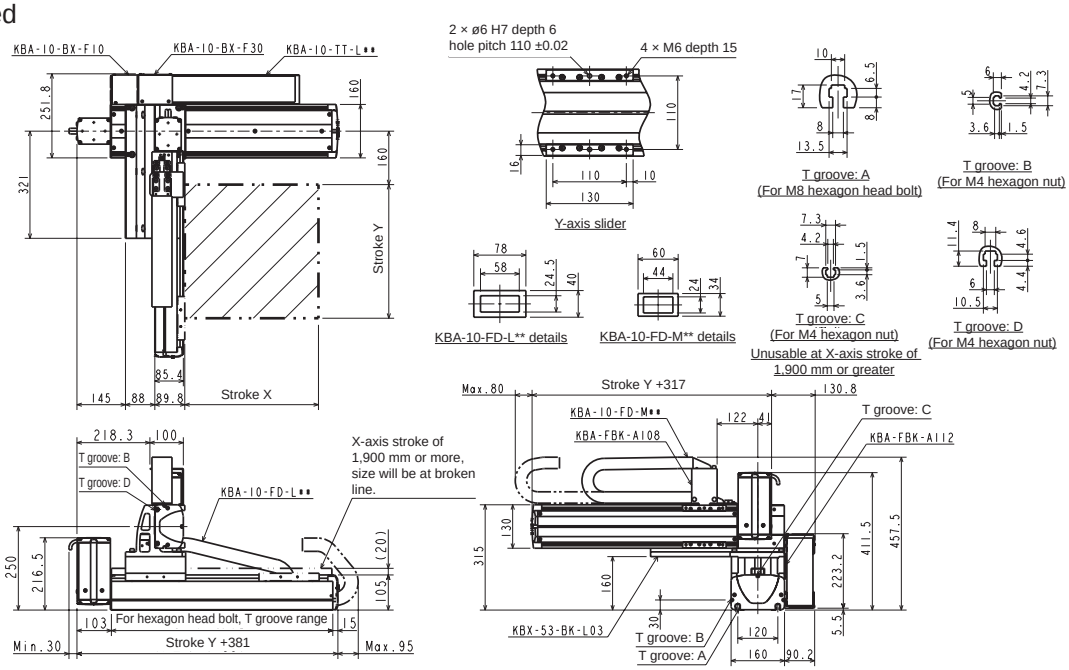

Orthogonal axis specifications: X-Y flexible duct specifications

Specifications

Descriptions		X-axis	Y-axis
Axis		KBX-50F-BT-M21N-□0	KBX-30F-B□-M21N-□0
Stroke 100 mm units	mm	200 to 3500	100 to 1000
Max. speed	mm/s	1000	1000
Repeatability	mm	±0.04	
Ball screw lead	mm	21 or equiv.	21 or equiv.
Motor size	W	200	200

Acceleration/deceleration time to the max. speed setting: 0.3 sec or greater

Timing belt drive

X-axis: timing belt drive
Motor: Top (R)/(L)
Y-axis: timing belt drive
Motor: Right (R)/Left (L)

Max. load capacity (kg)	Y-axis stroke									
	100 mm	200 mm	300 mm	400 mm	500 mm	600 mm	700 mm	800 mm	900 mm	1000 mm
	20.0	19.0	18.0	17.0	16.0	15.0	14.0	13.0	12.0	10.0

Dimensions

R: Right-handed

The value in ( ) is compatible with X-axis stroke 1,850 mm or more

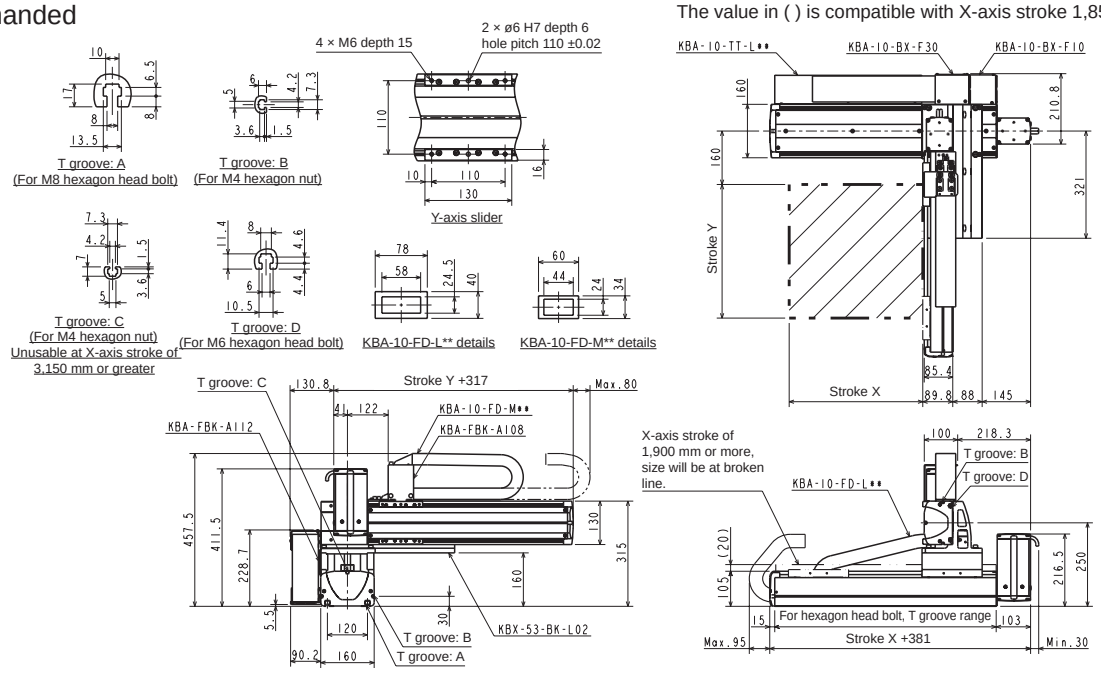

L: Left-handed

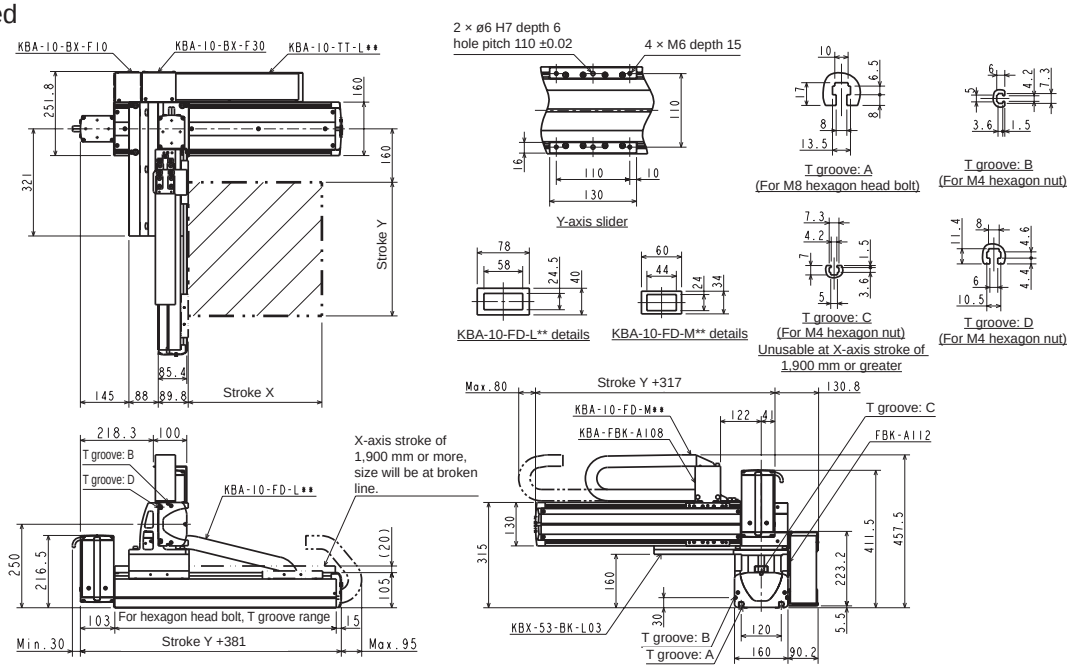

Orthogonal axis specifications: X-Z flexible duct specifications

Specifications

Descriptions		X-axis	Z-axis
Axis		KBX-10E-ST-M20N-□0	KBX-10E-ST-S10B-□5
Stroke 100 mm units	mm	100 to 1200	150 to 450
Max. speed	mm/s	1200 (*1)	600
Repeatability	mm	±0.01	
Ball screw lead	mm	20	10
Motor size	W	100	With 100 brake

Acceleration/deceleration time to the max. speed setting: 0.36 sec or greater

Ball screw drive

X-axis: ball screw drive
Straight motor axis
Z-axis: ball screw drive
Straight motor axis

(*1) For the following stroke, max. speed varies

	Stroke (mm)	Max. speed (mm/s)
X-axis	700	1000
	800	800
	900 to 1000	600
	1100 to 1200	400

Max. load capacity (kg) (*2)	Z-axis stroke			
	150 mm	250 mm	350 mm	450 mm
	8.0	6.0	4.0	2.0

(*2) The load capacity when using regenerative discharge unit KCA-ABSU-2000.

Dimensions

R: Right-handed

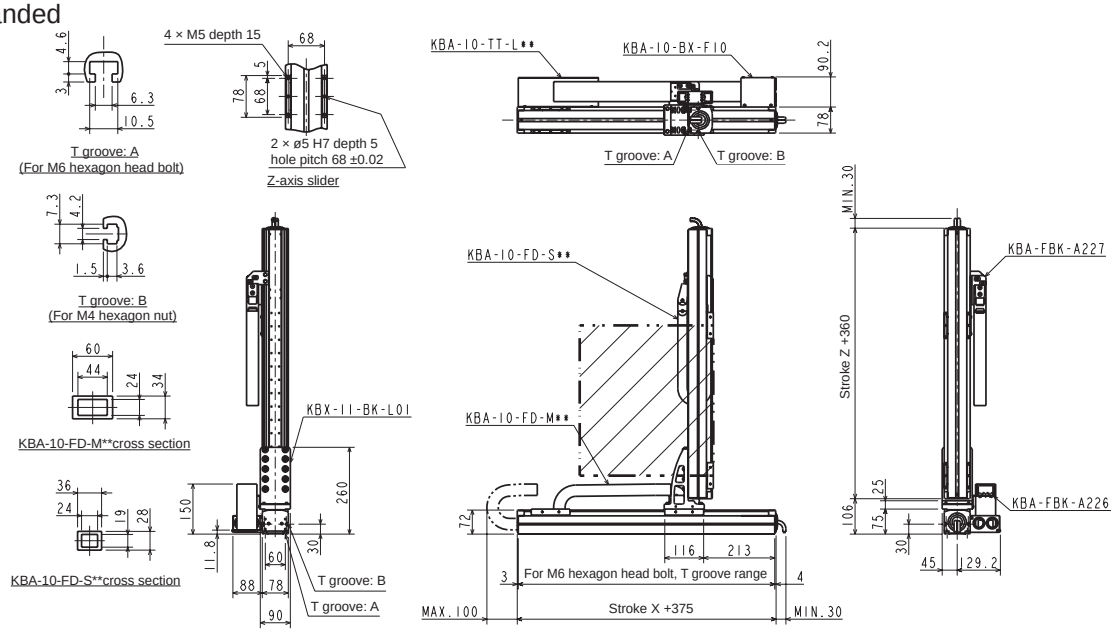

L: Left-handed

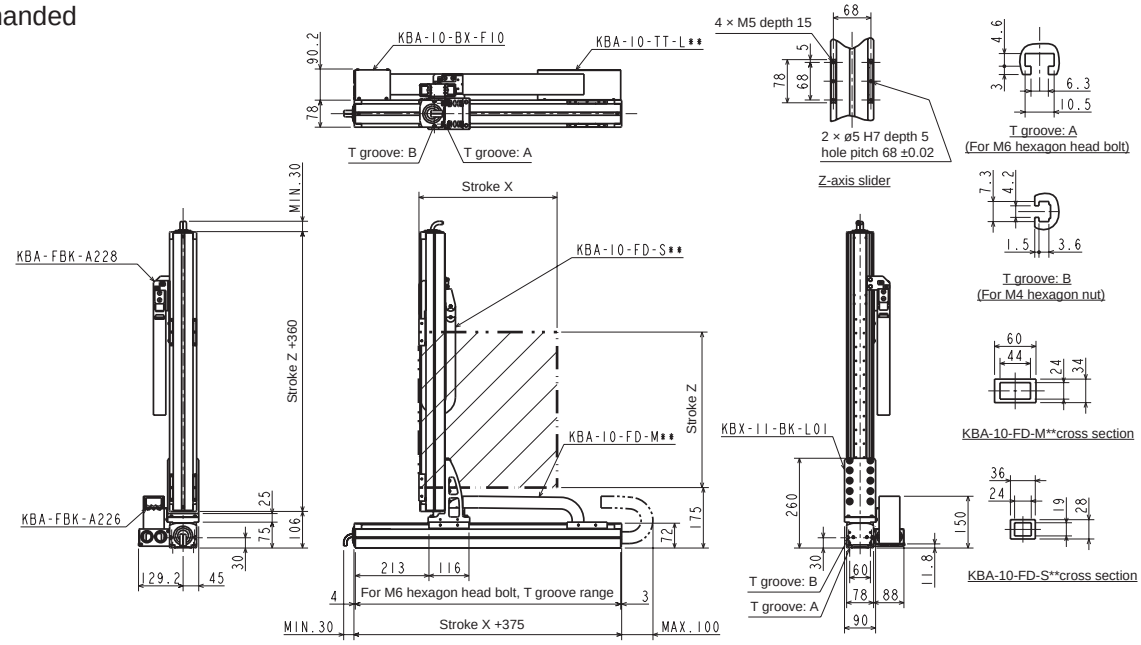

Orthogonal axis specifications: X-Z flexible duct specifications

Specifications

Descriptions		X-axis	Z-axis
Axis		KBX-30E-ST-M20N-□5	KBX-10E-ST-M10B-□0
Stroke 100 mm units	mm	150 to 1250	100 to 700
Max. speed	mm/s	1200 (*1)	600 (*1)
Repeatability	mm	±0.01	
Ball screw lead	mm	20	10
Motor size	W	100	With 100 brake

Acceleration/deceleration time to the max. speed setting: 0.6 sec or greater

Ball screw drive

X-axis: ball screw drive
Straight motor axis
Z-axis: ball screw drive
Straight motor axis

(*1) For the following stroke, max. speed varies

	Stroke (mm)	Max. speed (mm/s)
X-axis	750	1000
	850	800
	950 to 1050	600
	1150 to 1250	400
Z-axis	700	500

Max. load capacity (kg) (*2)	Z-axis stroke						
	100 mm	200 mm	300 mm	400 mm	500 mm	600 mm	700 mm
	9.0	8.0	8.0	8.0	6.0	4.0	2.0

(*2) The load capacity when using regenerative discharge unit KCA-ABSU-2000.

Dimensions

R: Right-handed

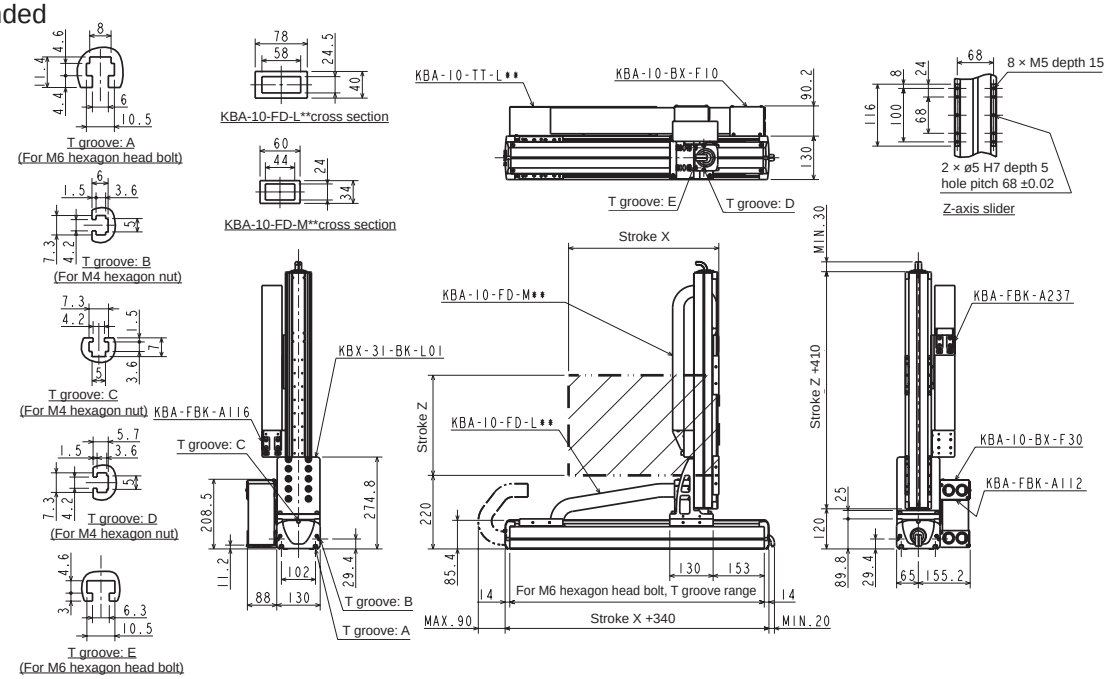

L: Left-handed

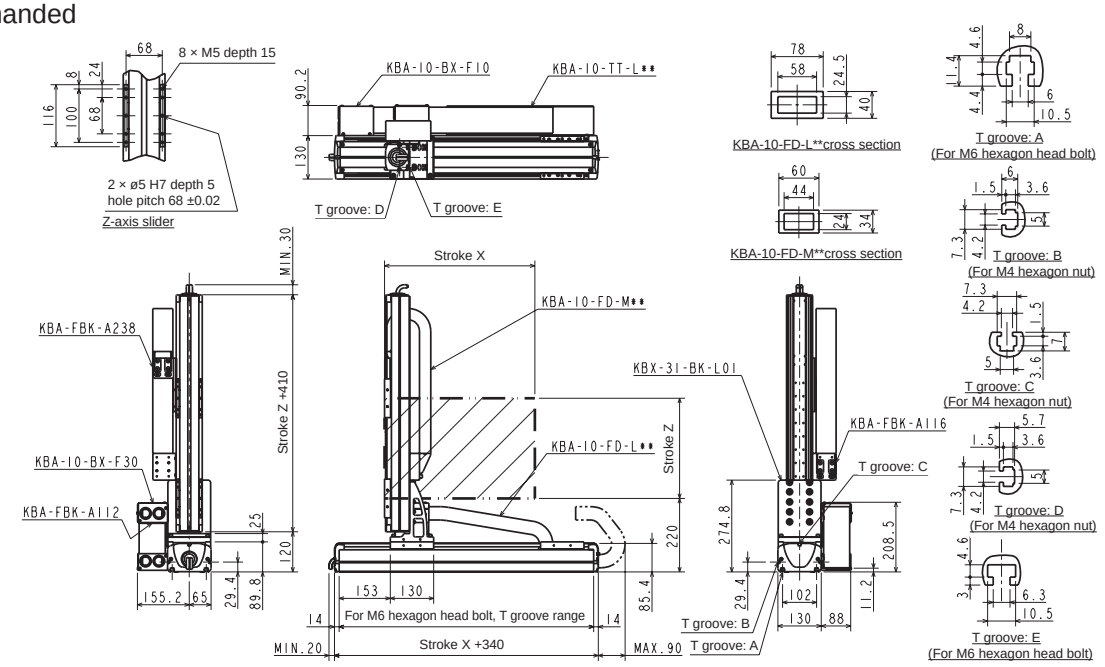

Orthogonal axis specifications: X-Z flexible duct specifications

Specifications

Descriptions		X-axis	Z-axis
Axis		KBX-30F-ST-M20N-□0	KBX-10E-ST-M10B-□0
Stroke 100 mm units	mm	100 to 1200	100 to 900
Max. speed	mm/s	1200 (*1)	600 (*1)
Repeatability	mm	±0.01	
Ball screw lead	mm	20	10
Motor size	W	200	With 100 brake

Acceleration/deceleration time to the max. speed setting: 0.36 sec or greater

Ball screw drive

X-axis: ball screw drive, Straight motor axis
Z-axis: ball screw drive, Straight motor axis

(*1) For the following stroke, max. speed varies

	Stroke (mm)	Max. speed (mm/s)
X-axis	700	1000
	800	800
	900 to 1000	600
	1100 to 1200	400
Z-axis	700	500
	800	400
	900	300

Max. load capacity (kg) (*2)	Z-axis stroke								
	100 mm	200 mm	300 mm	400 mm	500 mm	600 mm	700 mm	800 mm	900 mm
	12.0	12.0	12.0	12.0	12.0	10.0	4.0	2.0	2.0

(*2) The load capacity when using regenerative discharge unit KCA-ABSU-2000.

Dimensions

R: Right-handed

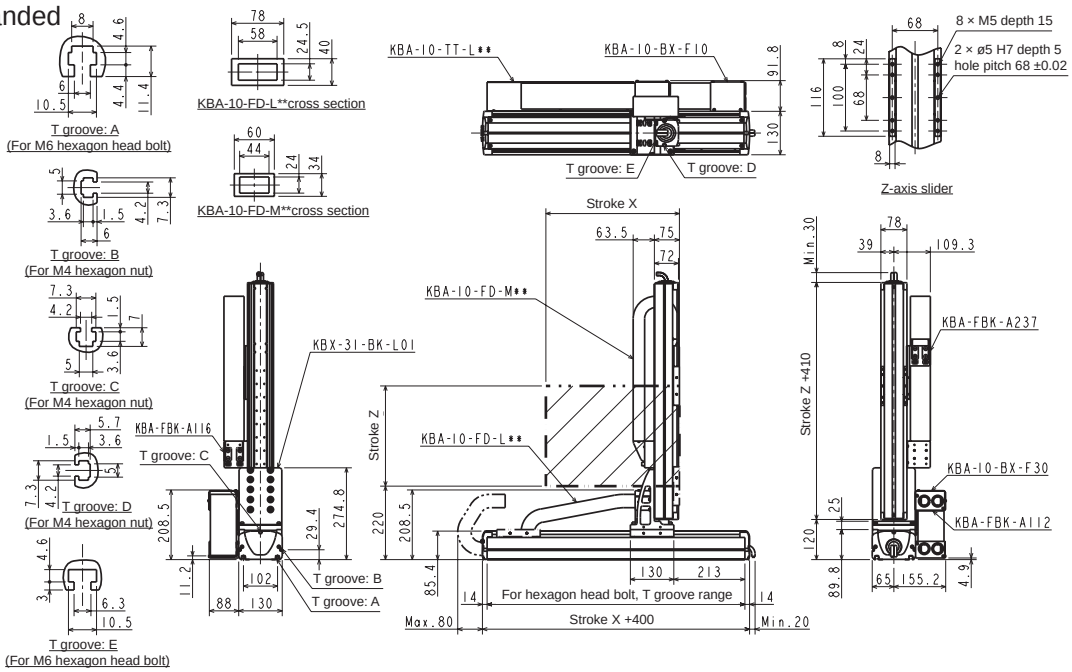

L: Left-handed

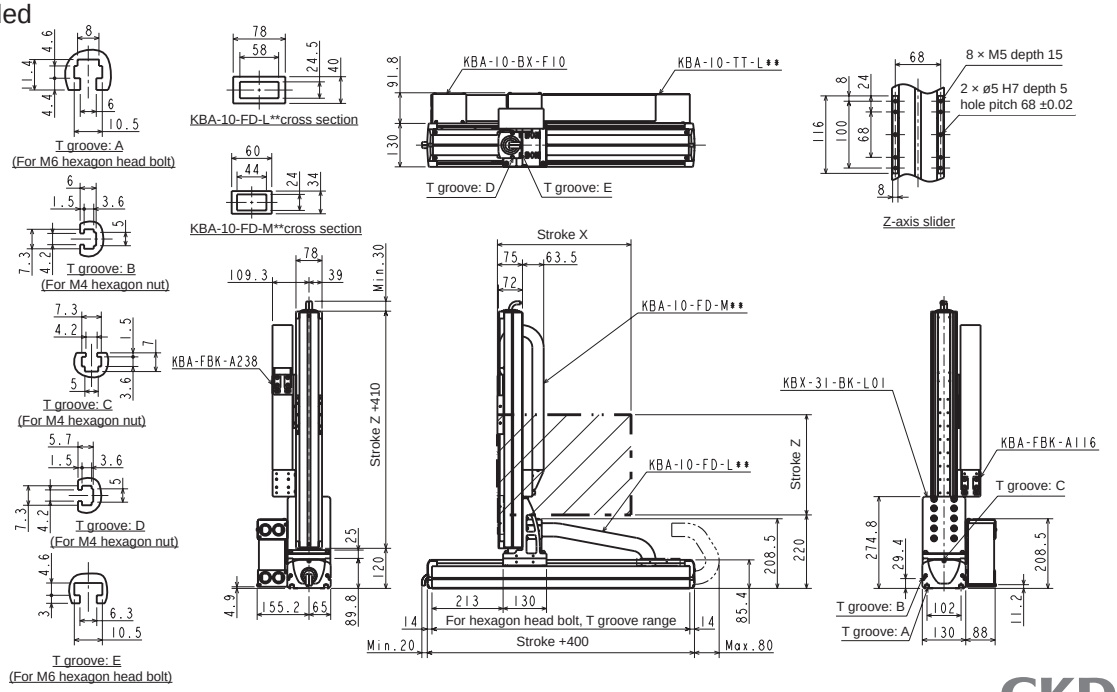

Orthogonal axis specifications: X-Z flexible duct specifications

Specifications

Descriptions		X-axis	Z-axis
Axis		KBX-50F-ST-M20N-□0	KBX-30E-ST-M10B-□5
Stroke 100 mm units	mm	200 to 1600	150 to 1050
Max. speed	mm/s	1200 (*1)	600 (*1)
Repeatability	mm	±0.01	
Ball screw lead	mm	20	10
Motor size	W	200	With 100 brake

Acceleration/deceleration time to the max. speed setting: 0.36 sec or greater

Ball screw drive

X-axis: ball screw drive, Straight motor axis
Z-axis: ball screw drive, Straight motor axis

(*1) For the following stroke, max. speed varies

	Stroke (mm)	Max. speed (mm/s)
X-axis	700 to 800	1100
	900 to 1000	1000
	1100 to 1200	700
	1300	500
	1400	400
	1500	300
	1600	200
Z-axis	750	500
	850	400
	950 to 1050	300

Max. load capacity (kg) (*2)	Z-axis stroke									
	150 mm	250 mm	350 mm	450 mm	550 mm	650 mm	750 mm	850 mm	950 mm	1050 mm
	12.0	12.0	12.0	12.0	12.0	12.0	12.0	12.0	12.0	8.0

(*2) The load capacity when using regenerative discharge unit KCA-ABSU-2000.

Dimensions

R: Right-handed

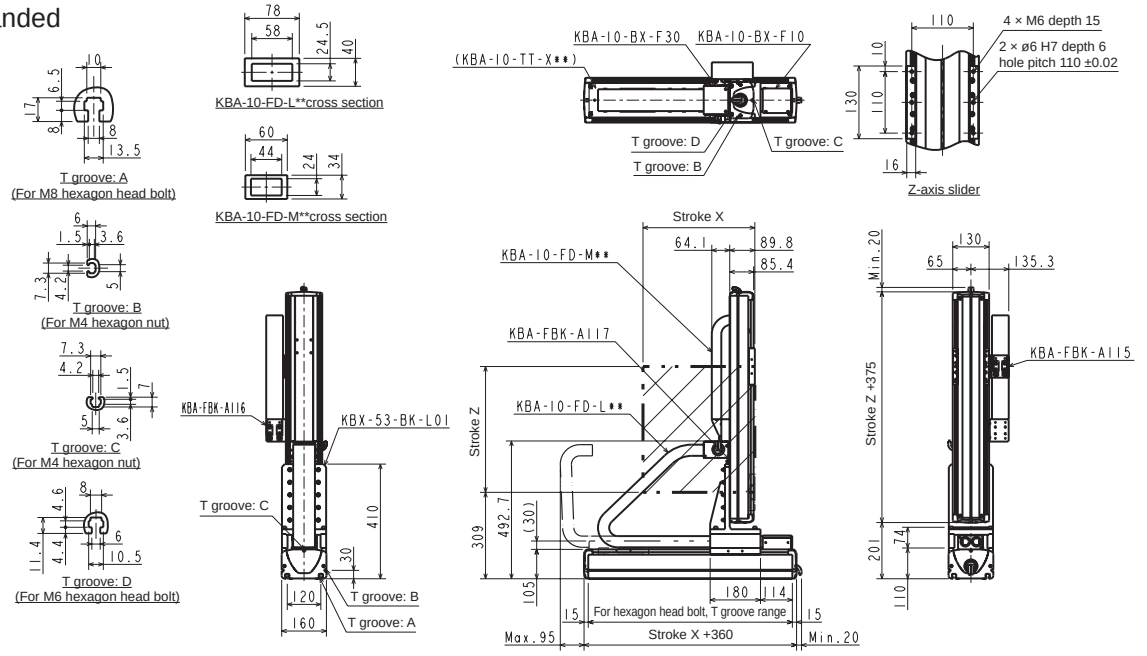

L: Left-handed

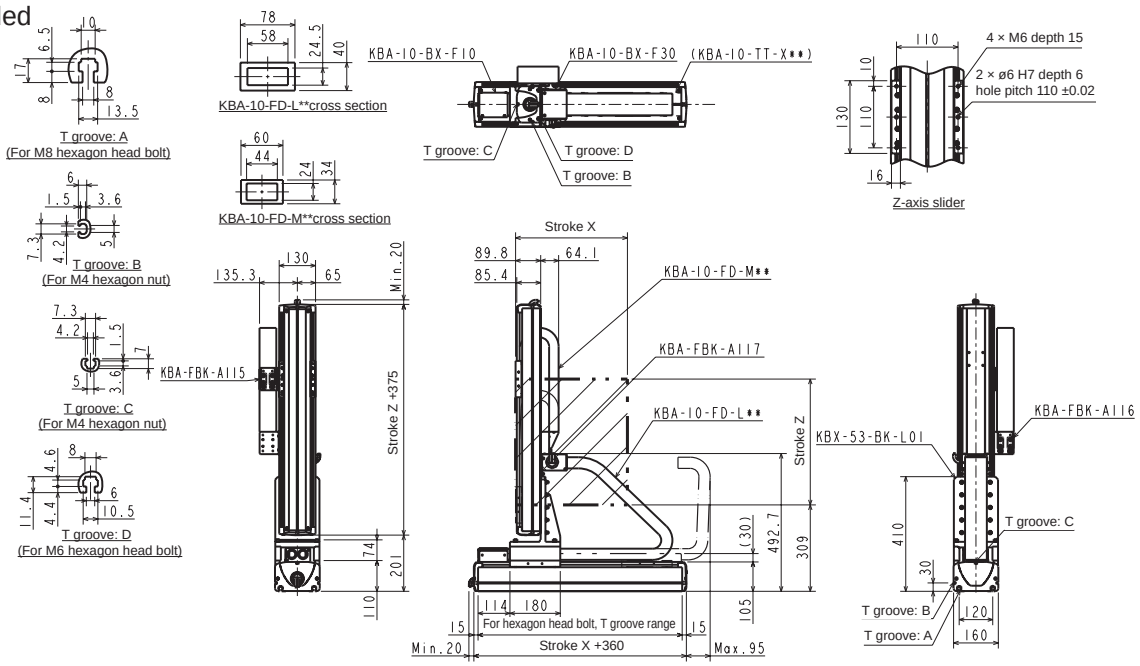

Orthogonal axis specifications: X-Z flexible duct specifications

Specifications

Descriptions		X-axis	Z-axis
Axis		KBX-50F-ST-M20N-□0	KBX-30F-ST-M10B-□0
Stroke 100 mm units	mm	200 to 1600	100 to 1000
Max. speed	mm/s	1200 (*1)	600 (*1)
Repeatability	mm	±0.01	
Ball screw lead	mm	20	10
Motor size	W	200	With 200 brake

Acceleration/deceleration time to the max. speed setting: 0.36 sec or greater

Ball screw drive

X-axis: ball screw drive, Straight motor axis
Z-axis: ball screw drive, Straight motor axis

(*1) For the following stroke, max. speed varies

	Stroke (mm)	Max. speed (mm/s)
X-axis	700 to 800	1100
	900 to 1000	1000
	1100 to 1200	700
	1300	500
	1400	400
	1500	300
	1600	200
Z-axis	700	500
	800	400
	900 to 1000	300

Max. load capacity (kg) (*2)	Z-axis stroke									
	100 mm	200 mm	300 mm	400 mm	500 mm	600 mm	700 mm	800 mm	900 mm	1000 mm
	20.0	20.0	20.0	20.0	20.0	20.0	16.0	13.0	9.0	7.0

(*2) The load capacity when using regenerative discharge unit KCA-ABSU-2000.

Dimensions

R: Right-handed

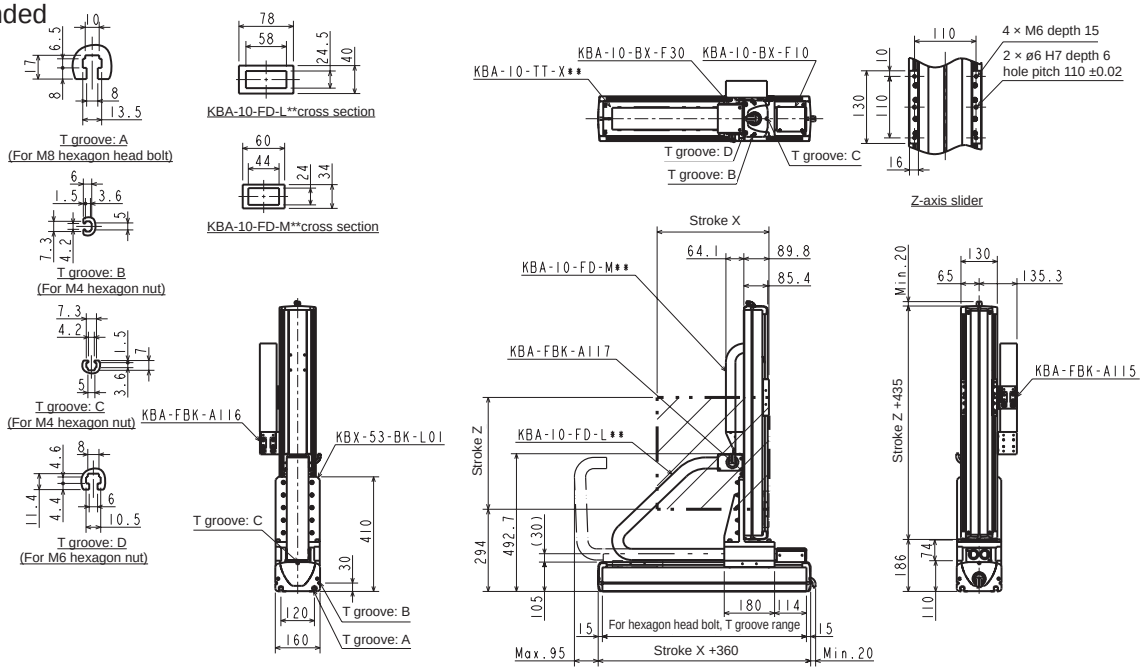

L: Left-handed

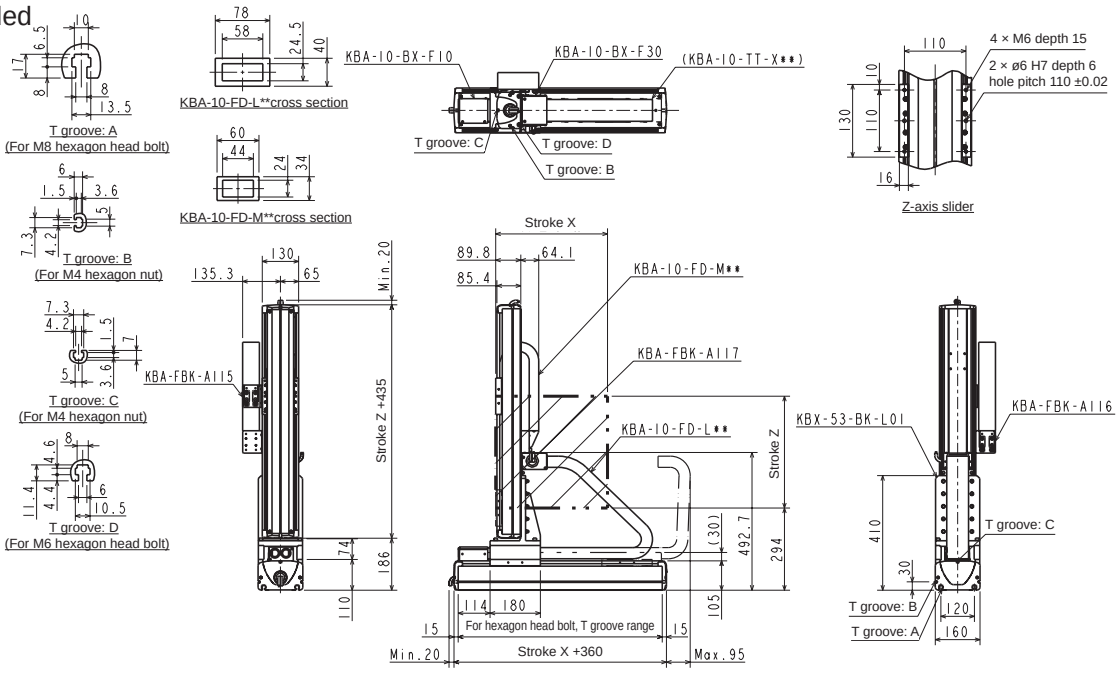

Orthogonal axis specifications: X-Z flexible duct specifications

Specifications

Descriptions		X-axis	Z-axis
Axis		KBX-50F-ST-M20N-□0	KBX-50F-ST-M10B-□0
Stroke 100 mm units	mm	200 to 1600	200 to 1000
Max. speed	mm/s	1200 (*1)	600 (*1)
Repeatability	mm	±0.01	
Ball screw lead	mm	20	10
Motor size	W	200	With 200 brake

Acceleration/deceleration time to the max. speed setting: 0.6 sec or greater

Ball screw drive

X-axis: ball screw drive, Straight motor axis
Z-axis: ball screw drive, Straight motor axis

(*1) For the following stroke, max. speed varies

	Stroke (mm)	Max. speed (mm/s)
X-axis	700 to 800	1100
	900 to 1000	1000
	1100 to 1200	700
	1300	500
	1400	400
	1500	300
	1600	200
Z-axis	750	500
	850	400
	950 to 1050	300

Max. load capacity (kg) (*2)	Z-axis stroke								
	200 mm	300 mm	400 mm	500 mm	600 mm	700 mm	800 mm	900 mm	1000 mm
	20.0	20.0	20.0	20.0 (19.0)	20.0 (17.0)	20.0 (15.0)	19.0 (13.0)	12.0 (11.0)	10.0

(*2) The load capacity when using regenerative discharge unit KCA-ABSU-2000.
When using the X-axis at speeds exceeding 1,000 mm/s, max. load capacity is the value in ( ).

Dimensions

R: Right-handed

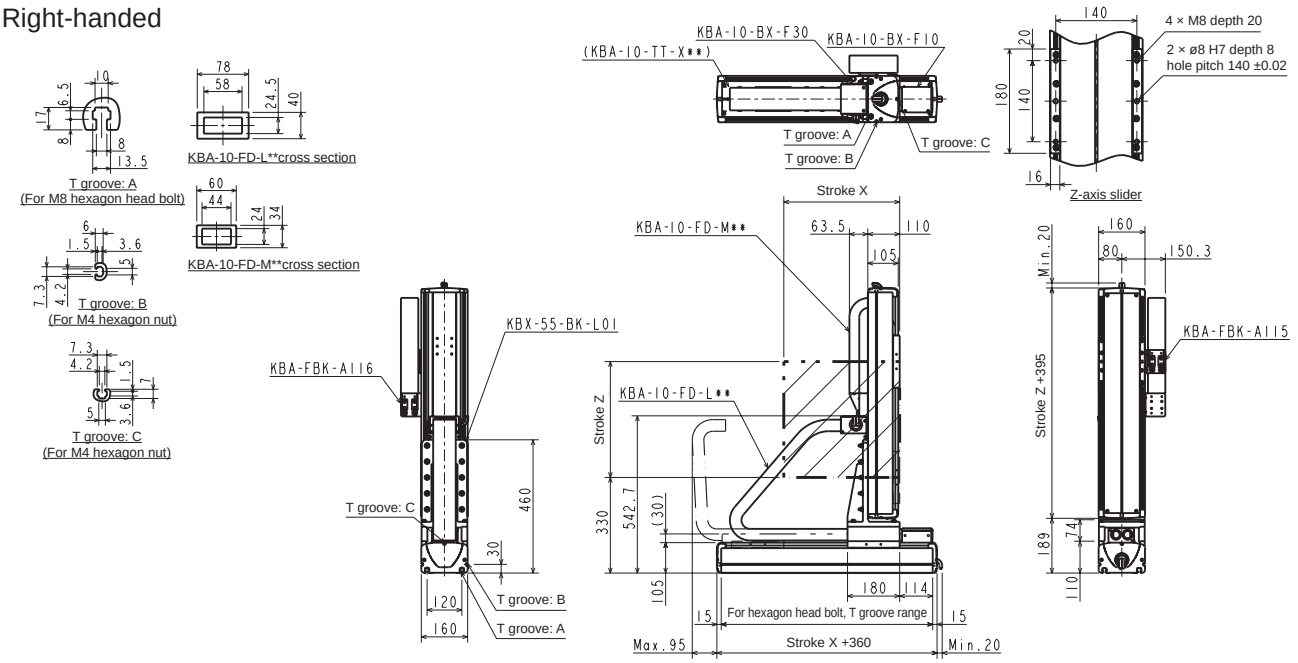

L: Left-handed

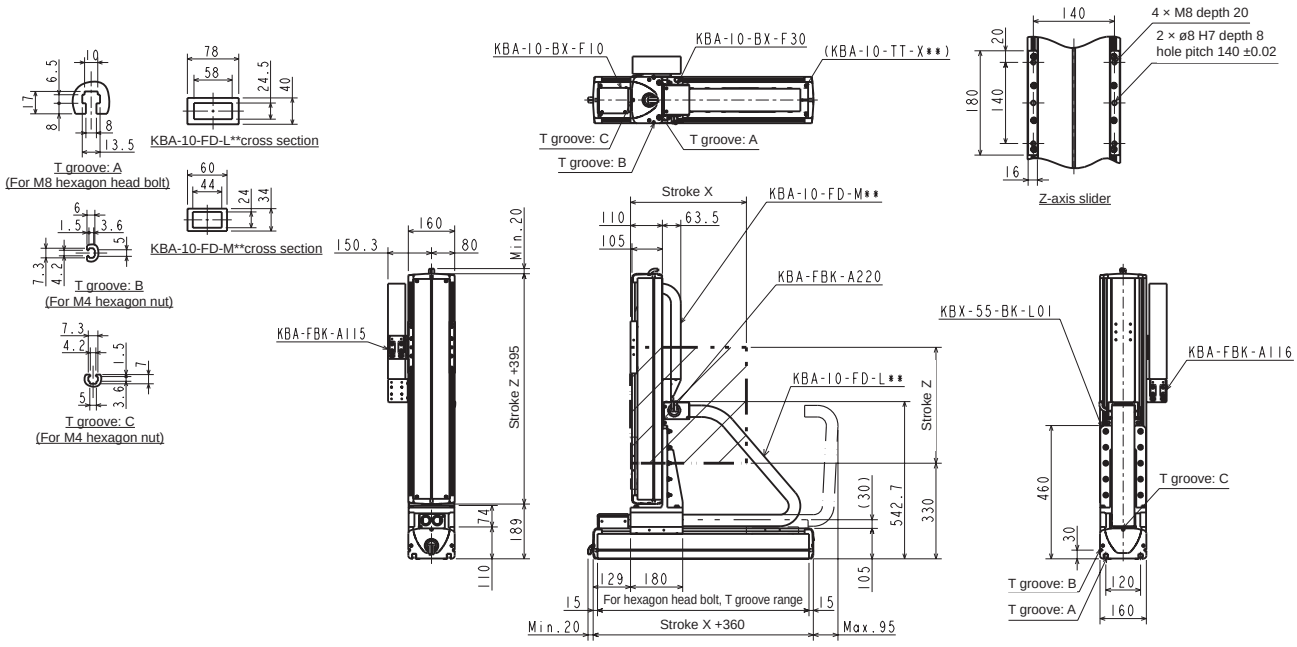

Orthogonal axis specifications: X-Z flexible duct specifications

Specifications

Descriptions		X-axis	Z-axis
Axis		KBX-10E-B□-M21N-□0	KBX-10E-ST-S10B-□5
Stroke 100 mm units	mm	100 to 2500	150 to 450
Max. speed	mm/s	1000	600
Repeatability	mm	±0.04	±0.01
Ball screw lead	mm	21 or equiv.	10
Motor size	W	100	With 100 brake

Acceleration/deceleration time to the max. speed setting: 0.5 sec or greater

Timing belt drive

X-axis: timing belt drive
Motor: Left (R)/Right (L)
Z-axis: ball screw drive
Straight motor axis

Max. load capacity (kg)	Z-axis stroke			
	150 mm	250 mm	350 mm	450 mm
	7.0	6.0	4.0	2.0

Dimensions

R: Right-handed

The value in ( ) is compatible with X-axis stroke 1,050 mm or more

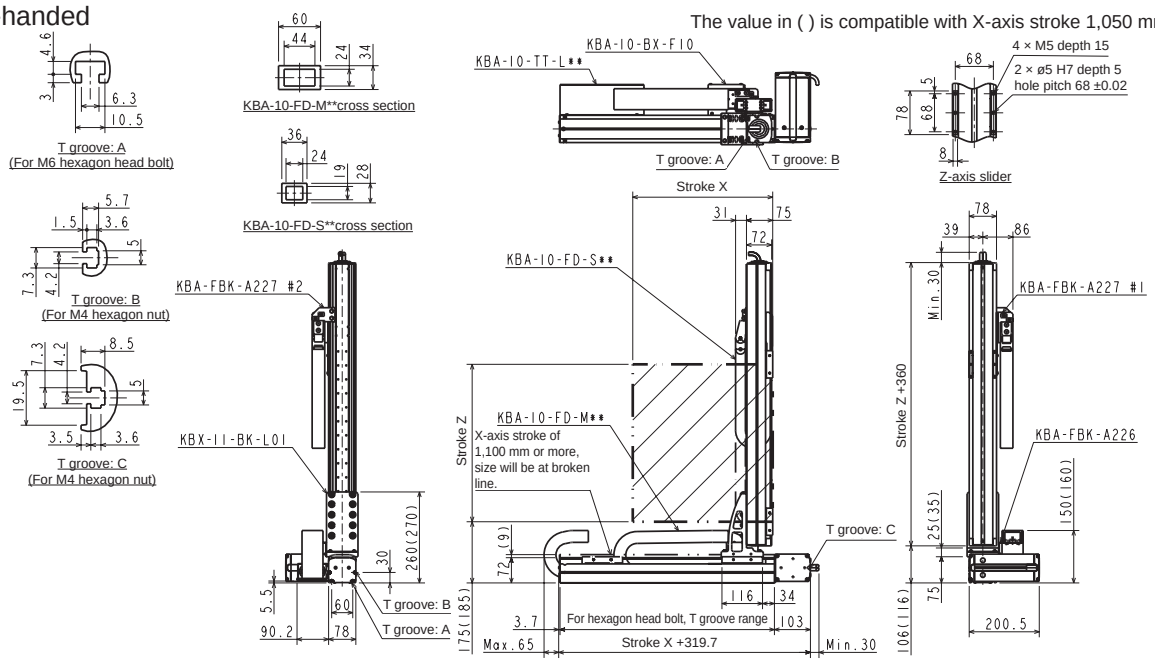

L: Left-handed

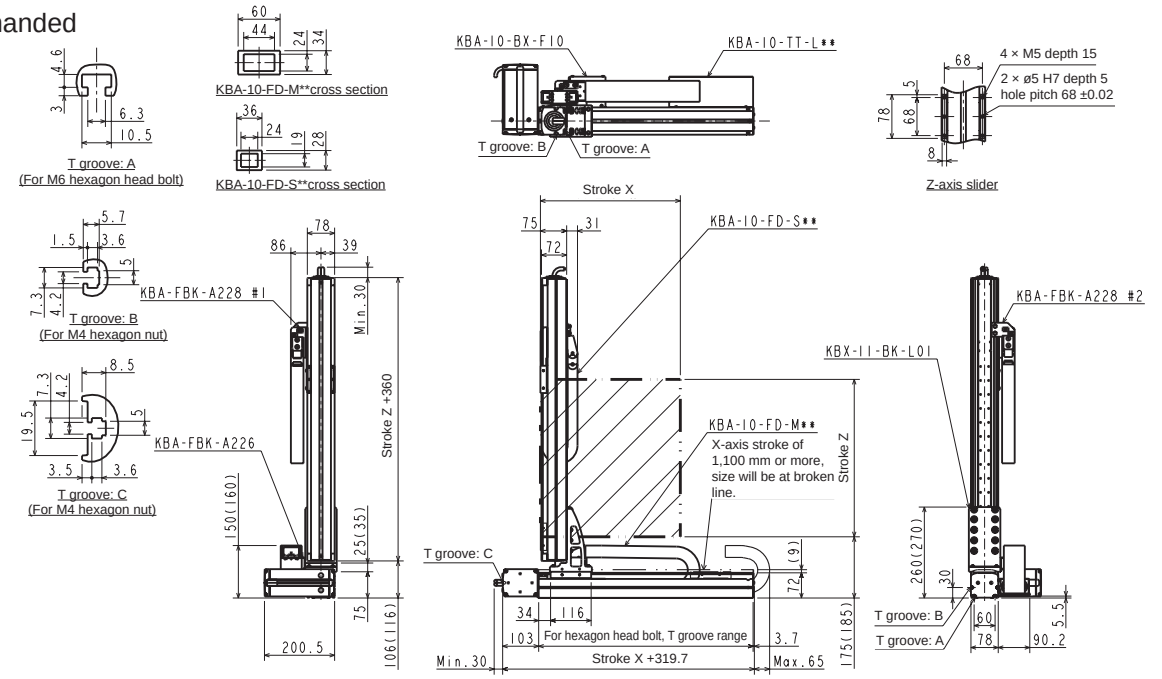

Orthogonal axis specifications: X-Z flexible duct specifications

Specifications

Descriptions		X-axis	Z-axis
Axis		KBX-10F-B□-M21N-□0	KBX-10E-ST-S10B-□5
Stroke 100 mm units	mm	100 to 2500	150 to 450
Max. speed	mm/s	1000	600
Repeatability	mm	±0.04	±0.01
Ball screw lead	mm	21 or equiv.	10
Motor size	W	200	With 100 brake

Acceleration/deceleration time to the max. speed setting: 0.36 sec or greater

Timing belt drive

X-axis: timing belt drive
Motor: Left (R)/Right (L)
Z-axis: ball screw drive
Straight motor axis

Max. load capacity (kg)	Z-axis stroke			
	150 mm	250 mm	350 mm	450 mm
	8.0	6.0	4.0	2.0

Dimensions

R: Right-handed

The value in ( ) is compatible with X-axis stroke 1,050 mm or more

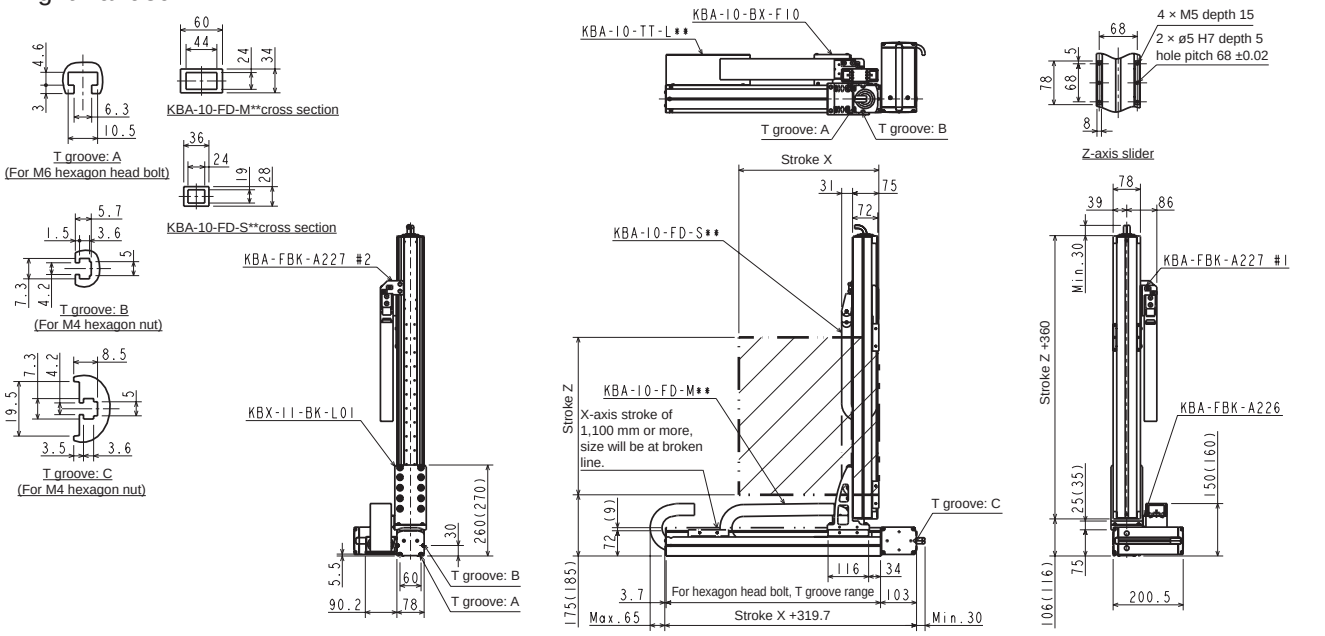

L: Left-handed

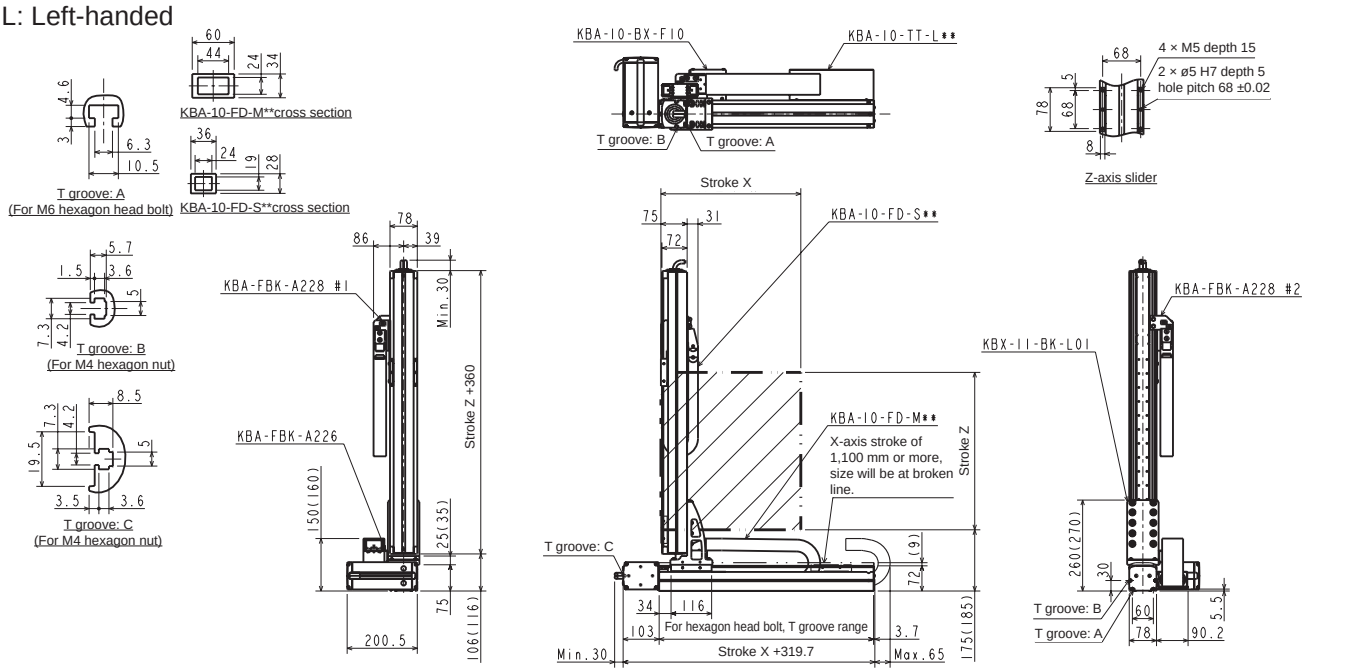

Orthogonal axis specifications: X-Z flexible duct specifications

Specifications

Descriptions		X-axis	Z-axis
Axis		KBX-30E-B□-M21N-□0	KBX-10E-ST-M10B-□0
Stroke 100 mm units	mm	100 to 3200	100 to 700
Max. speed	mm/s	1000	600 (Note 1)
Repeatability	mm	±0.04	±0.01
Ball screw lead	mm	21 or equiv.	10
Motor size	W	100	With 100 brake

Acceleration/deceleration time to the max. speed setting: 0.5 sec or greater

Timing belt drive

X-axis: timing belt drive
Motor: Left (R)/Right (L)
Z-axis: ball screw drive
Straight motor axis

(*1) For the following stroke, max. speed varies

	Stroke (mm)	Max. speed (mm/s)
Z-axis	700	500

Max. load capacity (kg)	Z-axis stroke						
	100 mm	200 mm	300 mm	400 mm	500 mm	600 mm	700 mm
	5.0	4.0	4.0	3.0	2.0	2.0	1.0

Dimensions

R: Right-handed

The value in ( ) is compatible with X-axis stroke 1,850 mm or more

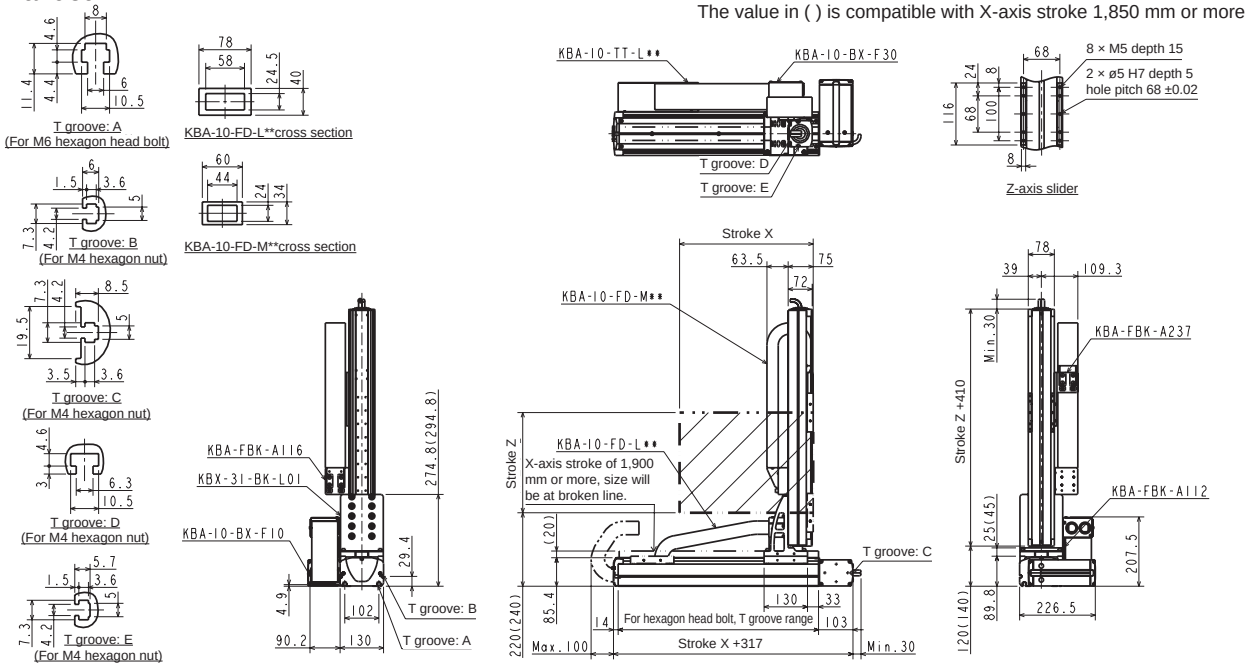

L: Left-handed

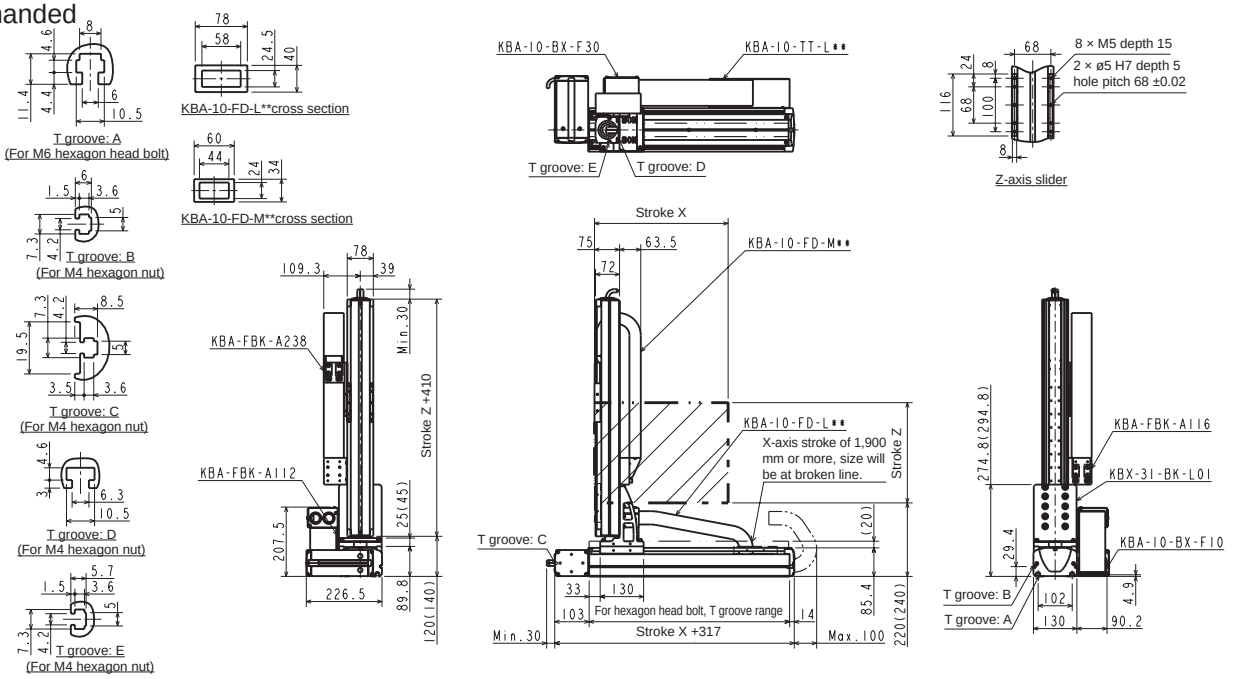

Orthogonal axis specifications: X-Z flexible duct specifications

Specifications

Descriptions		X-axis	Z-axis
Axis		KBX-30F-B□-M21N-□0	KBX-10E-ST-M10B-□0
Stroke 100 mm units	mm	100 to 3200	100 to 900
Max. speed	mm/s	1000	600 (*1)
Repeatability	mm	±0.04	±0.01
Ball screw lead	mm	21 or equiv.	10
Motor size	W	200	With 100 brake

Acceleration/deceleration time to the max. speed setting: 0.36 sec or greater

Timing belt drive

X-axis: timing belt drive
Motor: Left (R)/Right (L)
Z-axis: ball screw drive
Straight motor axis

(*1) For the following stroke, max. speed varies

	Stroke (mm)	Max. speed (mm/s)
Z-axis	700	500
	800	400
	900	300

Max. load capacity (kg) (*2)	Z-axis stroke								
	100 mm	200 mm	300 mm	400 mm	500 mm	600 mm	700 mm	800 mm	900 mm
	12.0	12.0	12.0	12.0	12.0	10.0	4.0	2.0	2.0

(*2) The load capacity when using regenerative discharge unit KCA-ABSU-2000.

Dimensions

R: Right-handed

The value in ( ) is compatible with X-axis stroke 1,850 mm or more

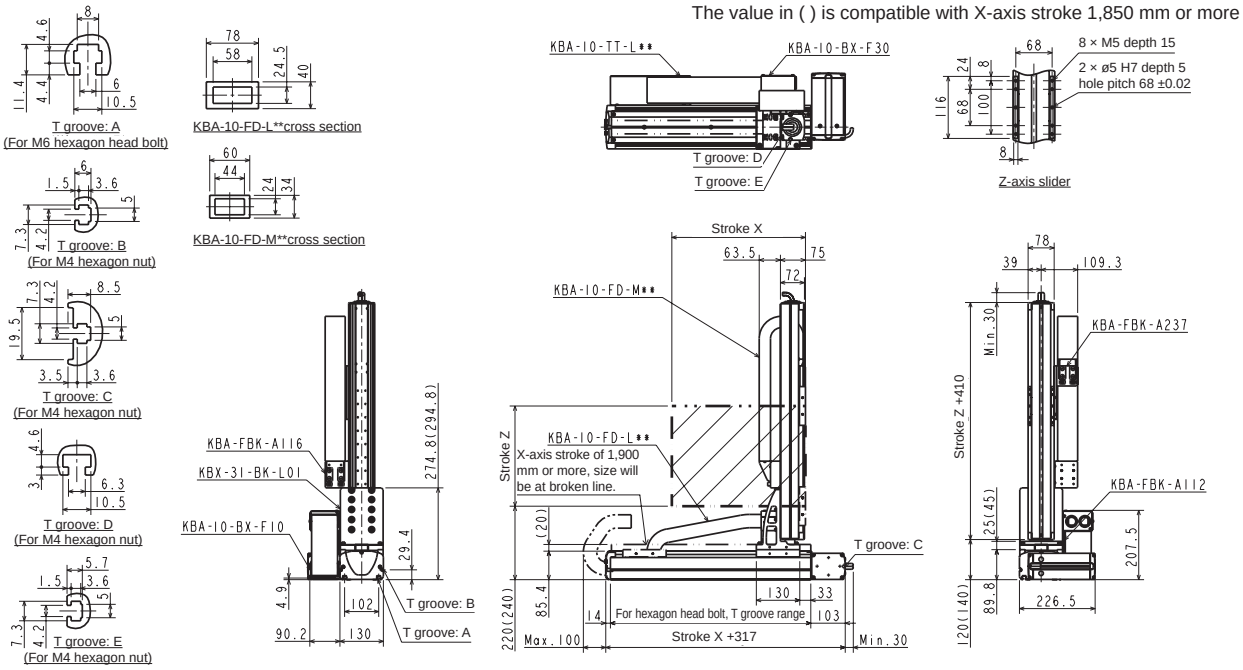

L: Left-handed

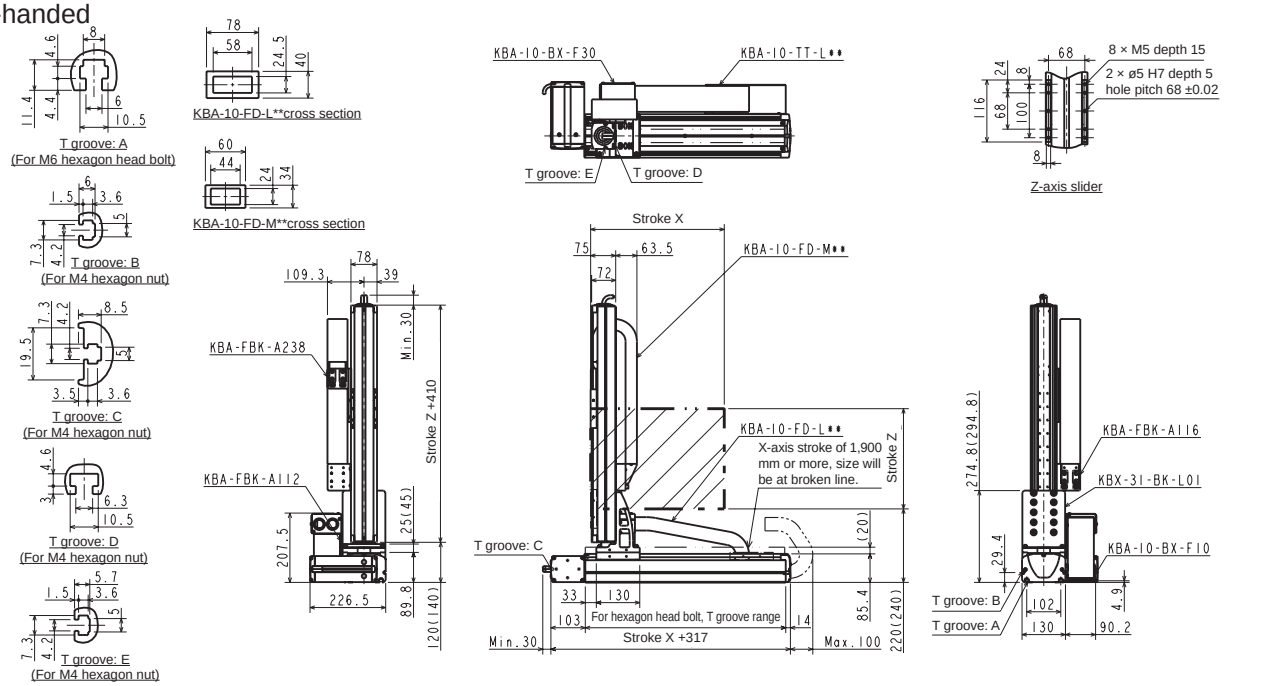

Orthogonal axis specifications: X-Z flexible duct specifications

Specifications

Descriptions		X-axis	Z-axis
Axis		KBX-50F-B□-M21N-□0	KBX-30E-ST-M10B-□5
Stroke 100 mm units	mm	200 to 3500	150 to 1050
Max. speed	mm/s	1000/s	600/s (*1)
Repeatability	mm	±0.04	±0.01
Ball screw lead	mm	21 or equiv.	10
Motor size	W	200	With 100 brake

Acceleration/deceleration time to the max. speed setting: 0.36 sec or greater

Timing belt drive

X-axis: timing belt drive
Motor: Left (R)/Right (L)
Z-axis: ball screw drive
Straight motor axis

(*1) For the following stroke, max. speed varies

	Stroke (mm)	Max. speed (mm/s)
Z-axis	750	500
	850	400
	950 to 1050	300

Max. load capacity (kg) (*2)	Z-axis stroke									
	150 mm	250 mm	350 mm	450 mm	550 mm	650 mm	750 mm	850 mm	950 mm	1050 mm
	12.0	12.0	12.0	12.0	12.0	12.0	12.0	12.0	12.0	8.0

(*2) The load capacity when using regenerative discharge unit KCA-ABSU-2000.

Dimensions

R: Right-handed

The value in ( ) is compatible with X-axis stroke 1,850 mm or more

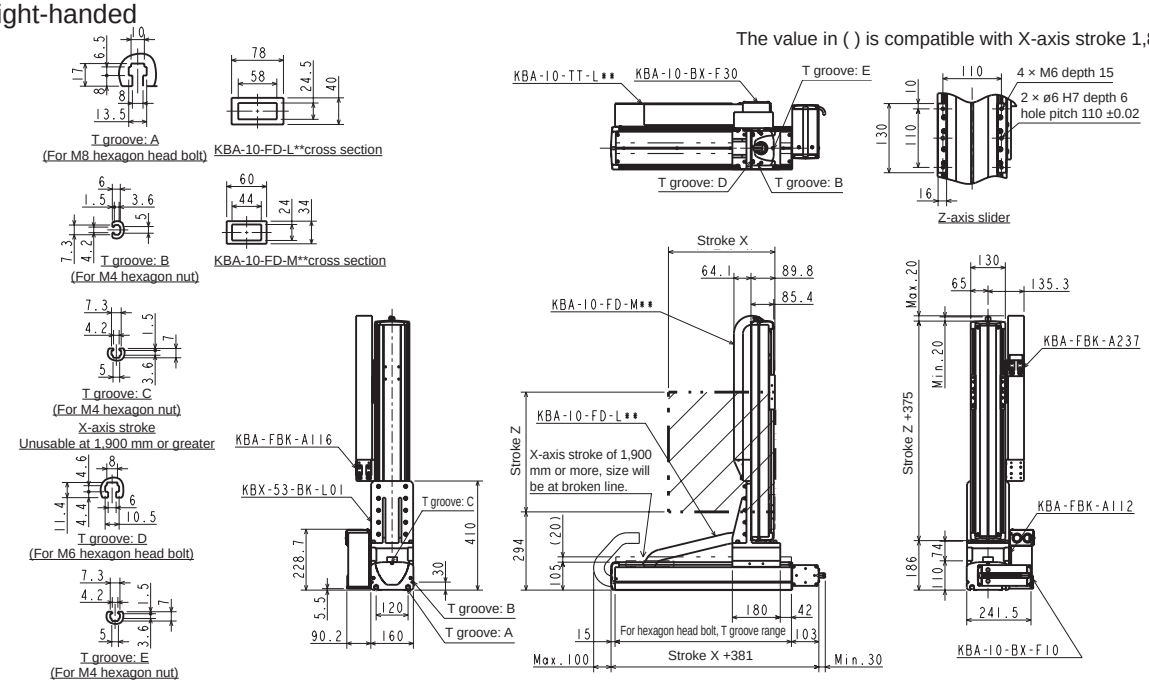

L: Left-handed

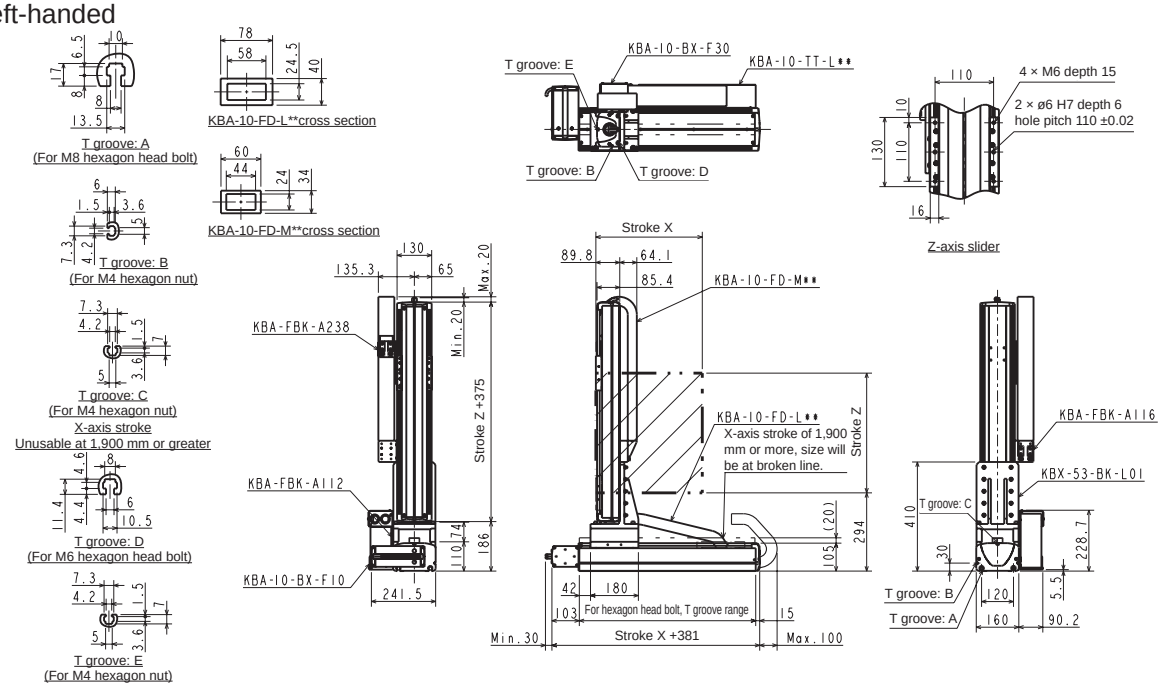

Orthogonal axis specifications: X-Z flexible duct specifications

Specifications

Descriptions		X-axis	Z-axis
Axis		KBX-50F-B□-M21N-□0	KBX-30F-ST-M10B-□0
Stroke 100 mm units	mm	200 to 3500	100 to 1000
Max. speed	mm/s	1000	600 (*1)
Repeatability	mm	±0.04	±0.01
Ball screw lead	mm	21 or equiv.	10
Motor size	W	200	With 200 brake

Acceleration/deceleration time to the max. speed setting: 0.36 sec or greater

Timing belt drive

X-axis: timing belt drive
Motor: Left (R)/Right (L)
Z-axis: ball screw drive
Straight motor axis

(*1) For the following stroke, max. speed varies

	Stroke (mm)	Max. speed (mm/s)
Z-axis	700	500
	800	400
	900 to 1000	300

Max. load capacity (kg) (*2)	Y-axis stroke									
	100 mm	200 mm	300 mm	400 mm	500 mm	600 mm	700 mm	800 mm	900 mm	1000 mm
	20.0	20.0	20.0	19.0	18.0	17.0	16.0	13.0	9.0	7.0

(*2) The load capacity when using regenerative discharge unit KCA-ABSU-2000.

Dimensions

R: Right-handed

The value in ( ) is compatible with X-axis stroke 1,850 mm or more

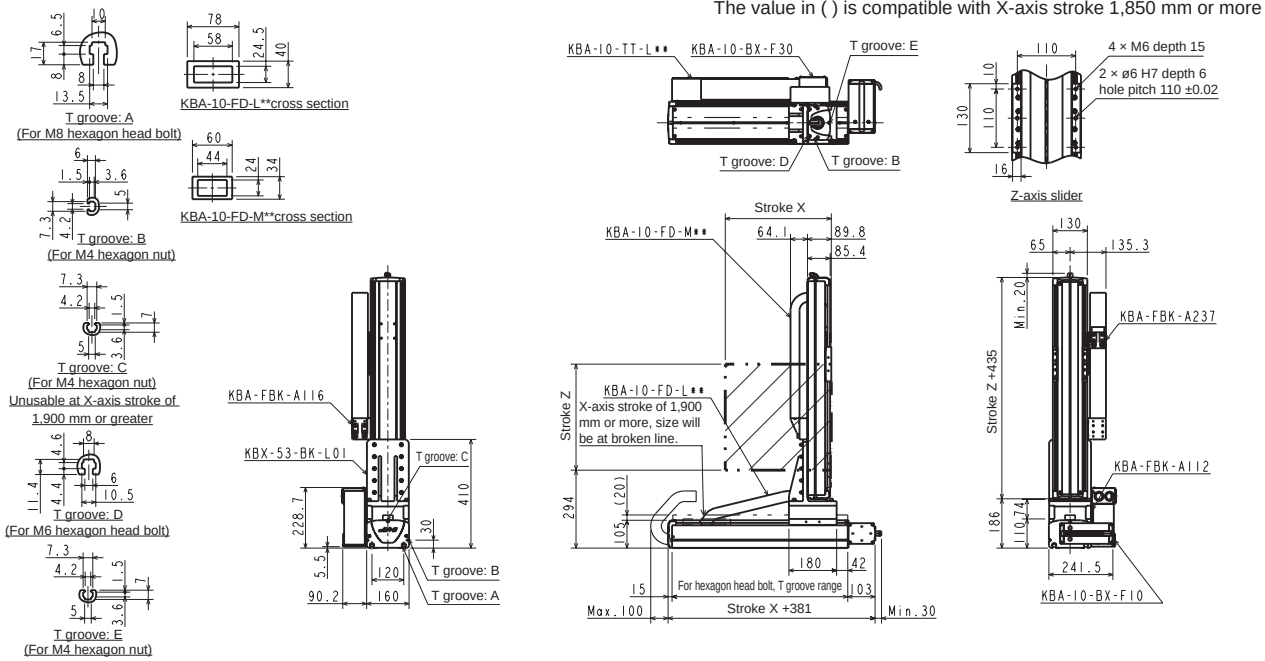

L: Left-handed

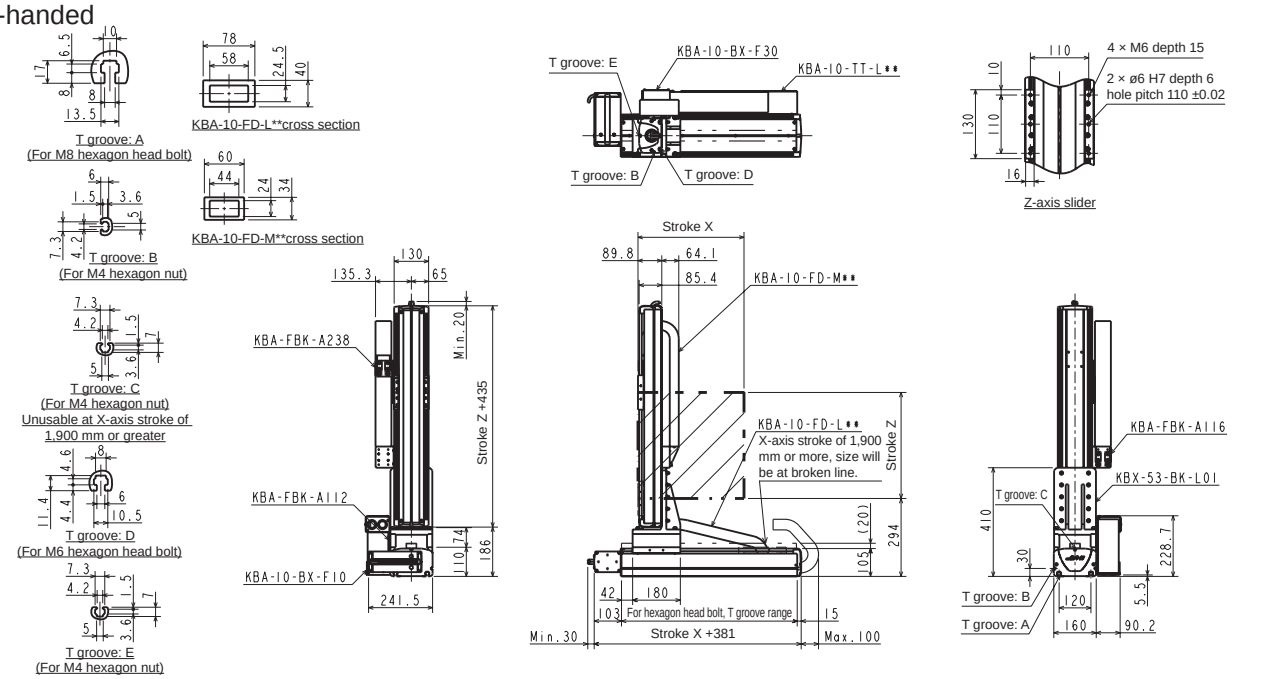

Orthogonal axis specifications: Y-Z specifications

Specifications

Descriptions		Y-axis	Z-axis
Axis		KBX-T7D-ST-M12N-□□	KBX-T5D-ST-M06B-□□
Stroke 50 mm units	mm	50 to 600, 700	50 to 500
Max. speed	mm/s	800 (*1)	400 (*1)
Repeatability	mm	±0.02	
Ball screw lead	mm	12	6
Motor size	W	50	With 50 brake

Acceleration/deceleration time to the max. speed setting: 0.3 sec or greater

Ball screw drive

Y-axis: ball screw drive
Straight motor axis
Z-axis: ball screw drive
Straight motor axis
(Note) Flexible duct and other wiring guidance parts are not included.

(*1) For the following stroke, max. speed varies

	Stroke (mm)	Max. speed (mm/s)
Y-axis	50 to 550	800
	600	680
	700	500
Z-axis	500	340

Max. load capacity (kg)	Z-axis stroke									
	50 mm	100 mm	150 mm	200 mm	250 mm	300 mm	350 mm	400 mm	450 mm	500 mm
	3.0	3.0	3.0	3.0	3.0	3.0	2.0	2.0	1.0	1.0

Dimensions

R: Right-handed

Stroke X (KBX-T7D)	50	100	150	200	250	300	350	400	450	500	550	600	700
Number of mounting holes A	4	6	6	8	8	10	10	12	12	14	14	16	18
Number of pitches B	1	2	2	3	3	4	4	5	5	6	6	7	8

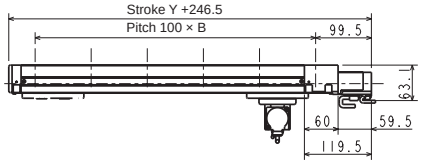

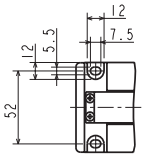

Y-axis slot details

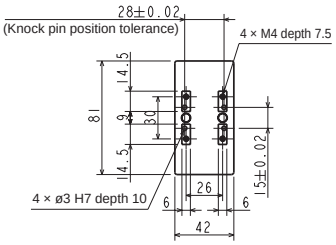

Z-axis slider details

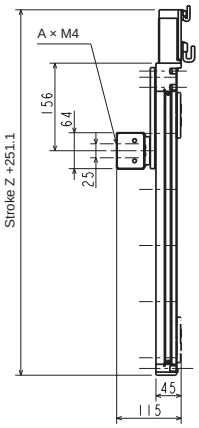

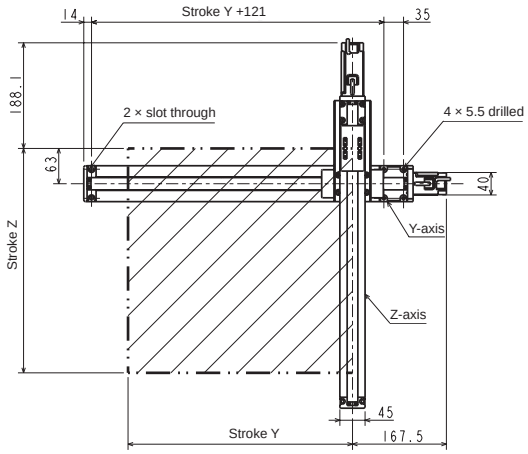

L: Left-handed

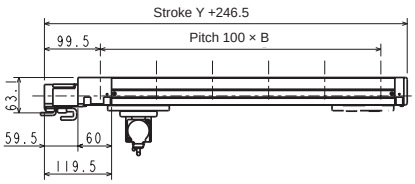

Stroke X (KBX-T7D)	50	100	150	200	250	300	350	400	450	500	550	600	700
Number of mounting holes A	4	6	6	8	8	10	10	12	12	14	14	16	18
Number of pitches B	1	2	2	3	3	4	4	5	5	6	6	7	8

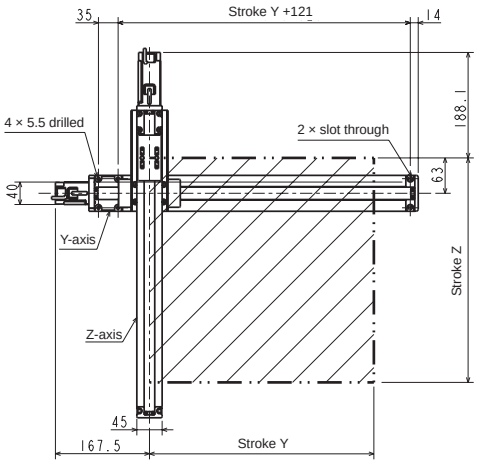

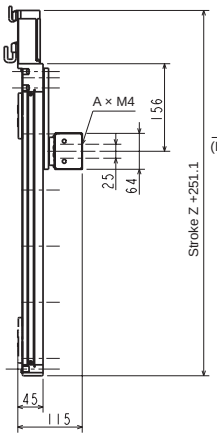

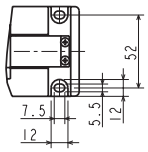

Y-axis slot details

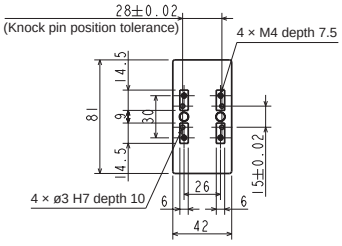

Z-axis slider details

Orthogonal axis specifications: Y-Z flexible duct specifications

Specifications

Descriptions		Y-axis	Z-axis
Axis		KBX-10E-ST-S20N-□5	KBX-T7D-ST-M06B-□□
Stroke Y-axis 100 mm units Z-axis 50 mm units	mm	150 to 1250	50 to 600
Max. speed	mm/s	1200 (*1)	400 (*1)
Repeatability	mm	±0.01	±0.02
Ball screw lead	mm	20	6
Motor size	W	100	With 50 brake

Acceleration/deceleration time to the max. speed setting: 0.36 sec or greater

Ball screw drive

Y-axis: ball screw drive
Straight motor axis
Z-axis: ball screw drive
Straight motor axis

(*1) For the following stroke, max. speed varies

	Stroke (mm)	Max. speed (mm/s)
Y-axis	750	1000
	850	800
	950 to 1050	600
	1150 to 1250	400
Z-axis	600	340

Max. load capacity (kg)	Z-axis stroke											
	50 mm	100 mm	150 mm	200 mm	250 mm	300 mm	350 mm	400 mm	450 mm	500 mm	550 mm	600 mm
	4.0	4.0	4.0	4.0	4.0	4.0	4.0	4.0	3.5	3.5	2.0	2.0

Dimensions

R: Right-handed

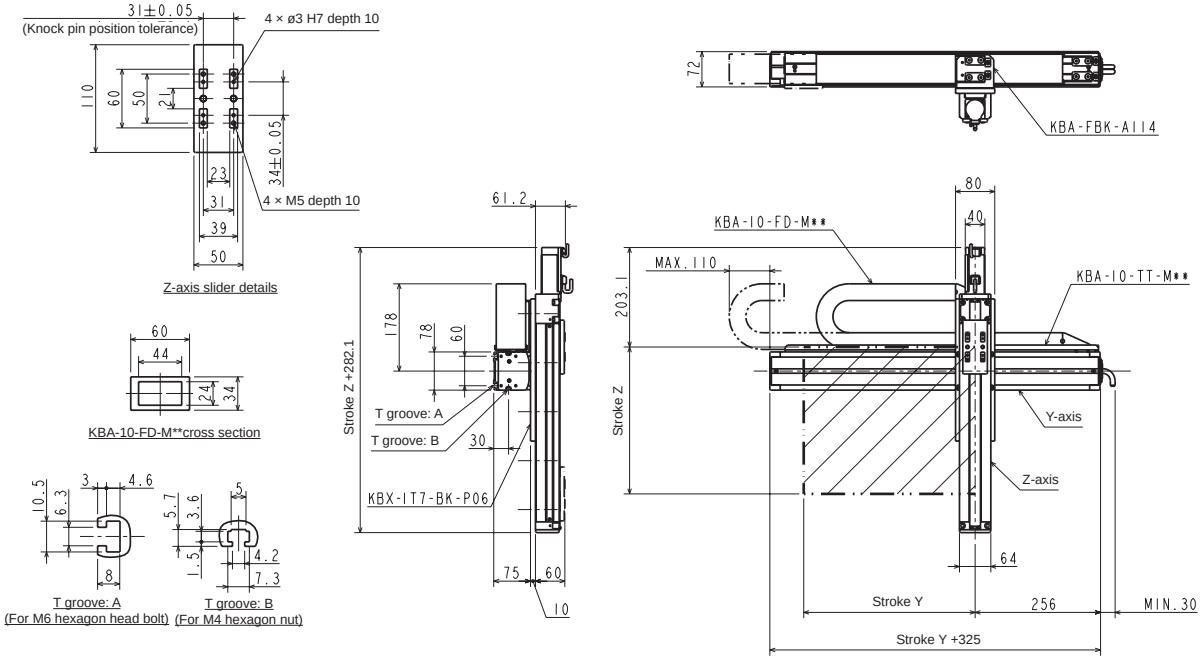

L: Left-handed

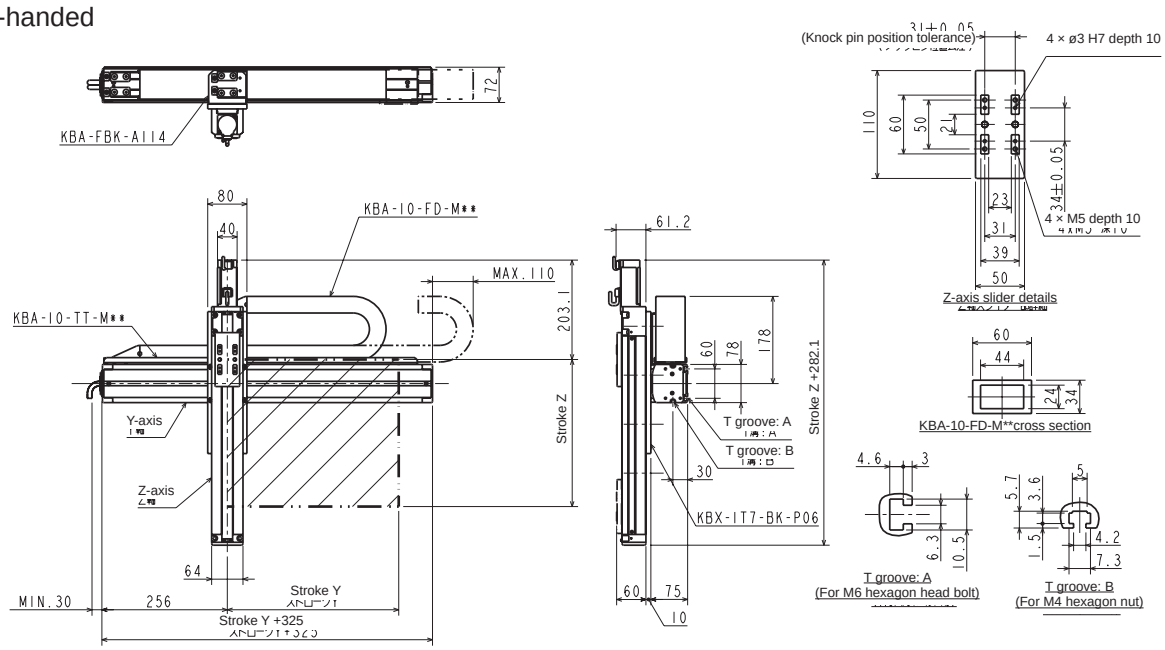

Orthogonal Axis Specifications: Y-Z Flexible Duct Specifications

Specifications

Item		Y-axis	Z-axis
Axis		KBX-10E-ST-M20N- □ 0	KBX-10E-U □ -S10B- □ 5
Stroke 100 mm units	mm	100 to 1200	150 to 550
Max. speed	mm/s	1200 (*1)	600
Repeatability	mm	±0.01	
Ball screw lead	mm	20	10
Motor size	W	100	With 100 brake

Acceleration/deceleration time to the max. speed setting: 0.36 sec or greater

Ball screw drive

Y-axis: ball screw drive
Motor axis straight
Z-axis: ball screw drive
Motor side mounting (left, right, bottom)

Max.workload (kg) (*2)	Z-axis stroke				
	150 mm	250 mm	350 mm	450 mm	550 mm
	8.0	8.0	6.5	5.0	3.0

(*2) The load capacity when using regenerative discharge unit KCA-ABSU-2000.

Dimensions

R: Right-handed

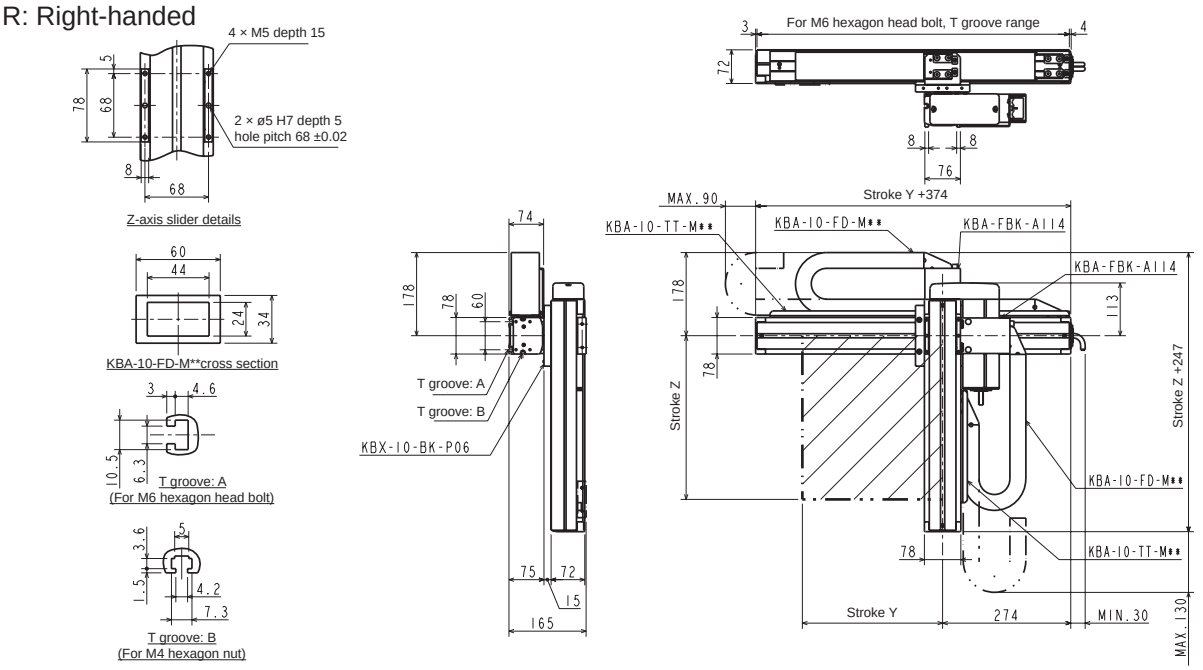

L: Left-handed

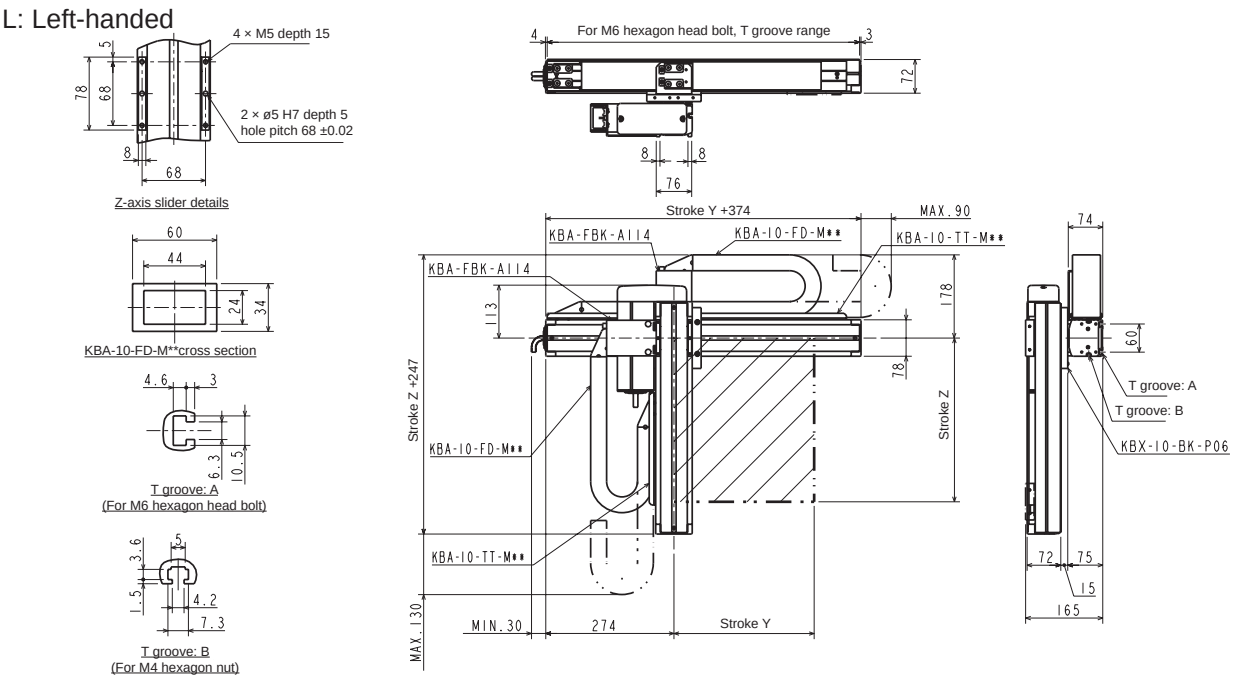

Orthogonal axis specifications: Y-Z flexible duct specifications

Specifications

Descriptions		Y-axis	Z-axis
Axis		KBX-30E-ST-M20N-□5	KBX-10E-U□-M10B-□0
Stroke 100 mm units	mm	150 to 1250	100 to 800
Max. speed	mm/s	1200 (*1)	600 (*1)
Repeatability	mm	±0.01	
Ball screw lead	mm	20	10
Motor size	W	100	With 100 brake

Acceleration/deceleration time to the max. speed setting: 0.48 sec or greater

Ball screw drive

Y-axis: ball screw drive
Straight motor axis
Z-axis: ball screw drive
Motor: Right (R)/Left (L)

(*1) For the following stroke, max. speed varies

	Stroke (mm)	Max. speed (mm/s)
Y-axis	750	1000
	850	800
	950 to 1050	600
	1150 to 1250	400
Z-axis	700	500
	800	400

Max. load capacity (kg) (*2)	Z-axis stroke							
	100 mm	200 mm	300 mm	400 mm	500 mm	600 mm	700 mm	800 mm
	12.0	11.0	9.0	9.0	6.0	5.0	1.0	1.0

(*2) The load capacity when using regenerative discharge unit KCA-ABSU-2000.

Dimensions

R: Right-handed

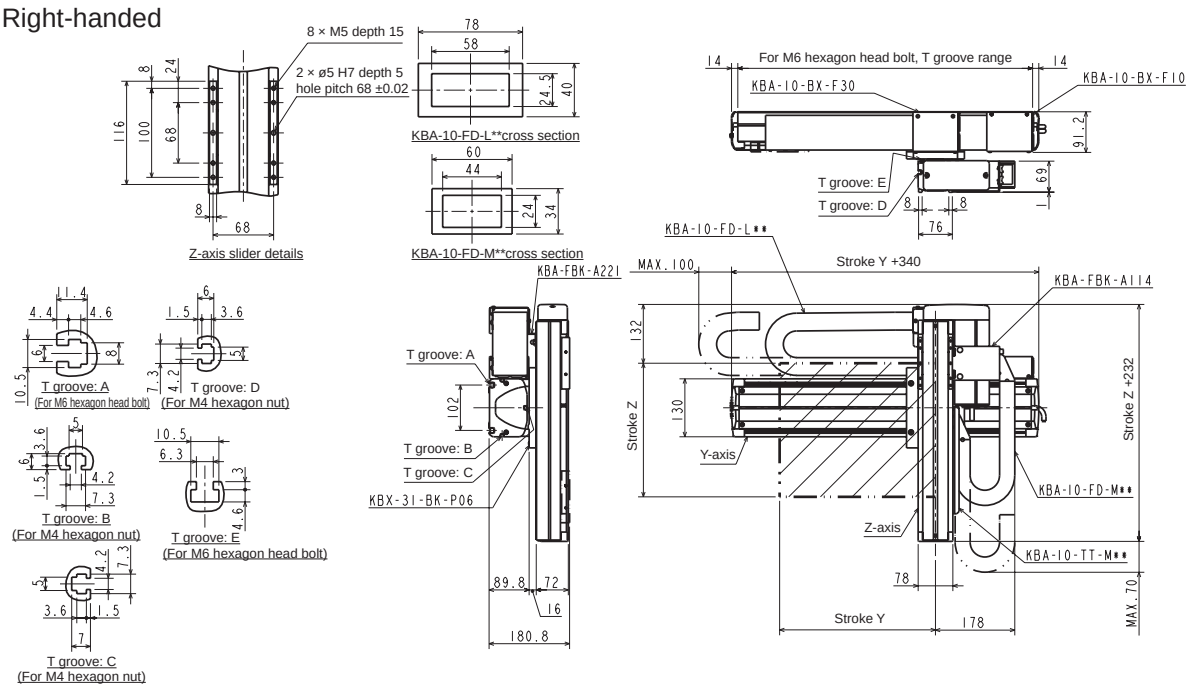

L: Left-handed

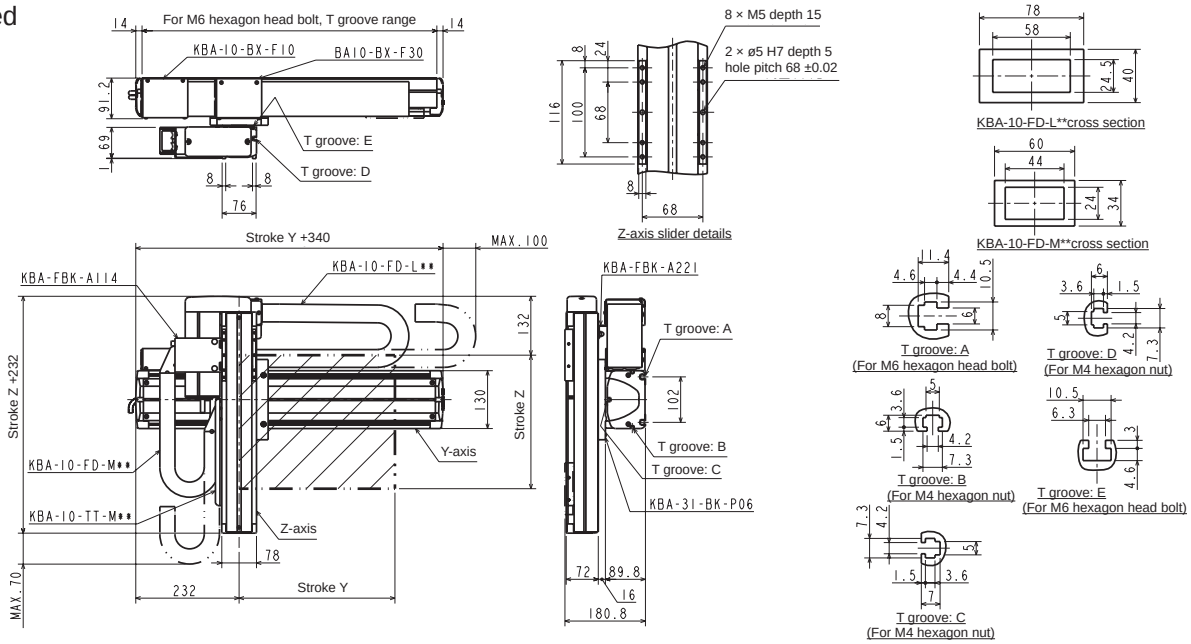

Orthogonal axis specifications: Y-Z flexible duct specifications

Specifications

Descriptions		Y-axis	Z-axis
Axis		KBX-30F-ST-M20N-□0	KBX-10E-U□-M10B-□0
Stroke 100 mm units	mm	100 to 1200	100 to 1000
Max. speed	mm/s	1200 (*1)	600 (*1)
Repeatability	mm	±0.01	
Ball screw lead	mm	20	10
Motor size	W	200	With 100 brake

Acceleration/deceleration time to the max. speed setting: 0.36 sec or greater

Ball screw drive

Y-axis: ball screw drive
Straight motor axis
Z-axis: ball screw drive
Motor: Right (R)/Left (L)

(*1) For the following stroke, max. speed varies

	Stroke (mm)	Max. speed (mm/s)
Y-axis	700	1000
	800	800
	900 to 1000	600
	1100 to 1200	400
Z-axis	700	500
	800	400
	900 to 1000	300

Max. load capacity (kg) (*2)	Z-axis stroke									
	100 mm	200 mm	300 mm	400 mm	500 mm	600 mm	700 mm	800 mm	900 mm	1000 mm
	12.0	12.0	12.0	12.0	12.0	12.0	10.0	5.0	4.0	4.0

(*2) The load capacity when using regenerative discharge unit KCA-ABSU-2000.

Dimensions

R: Right-handed

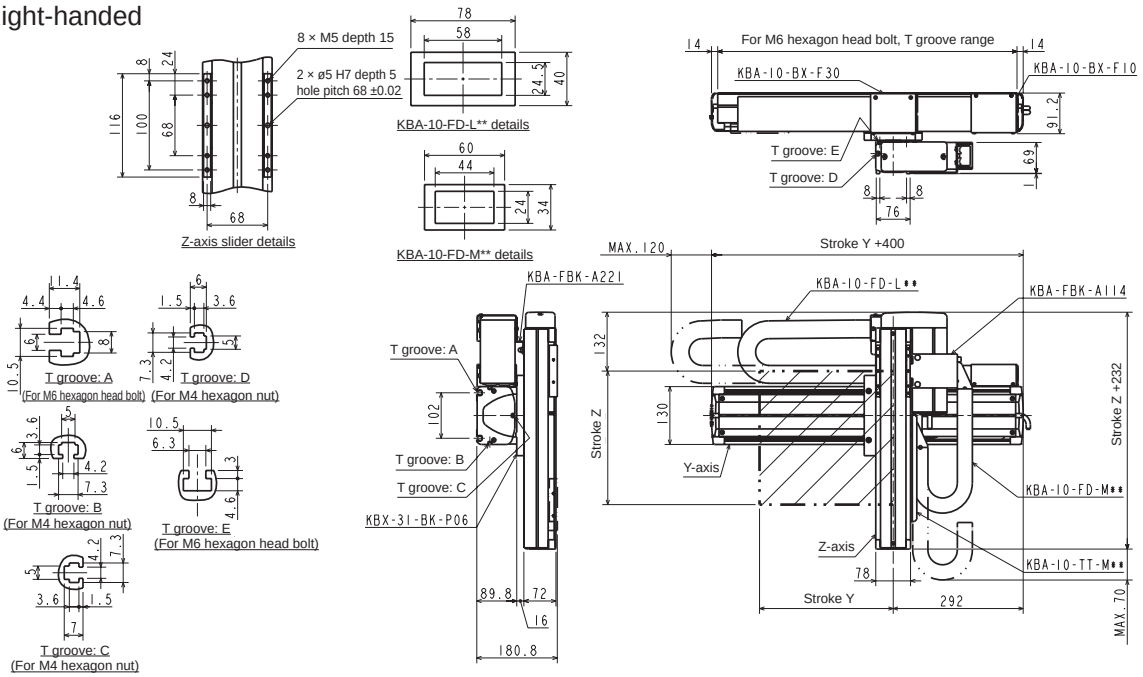

L: Left-handed

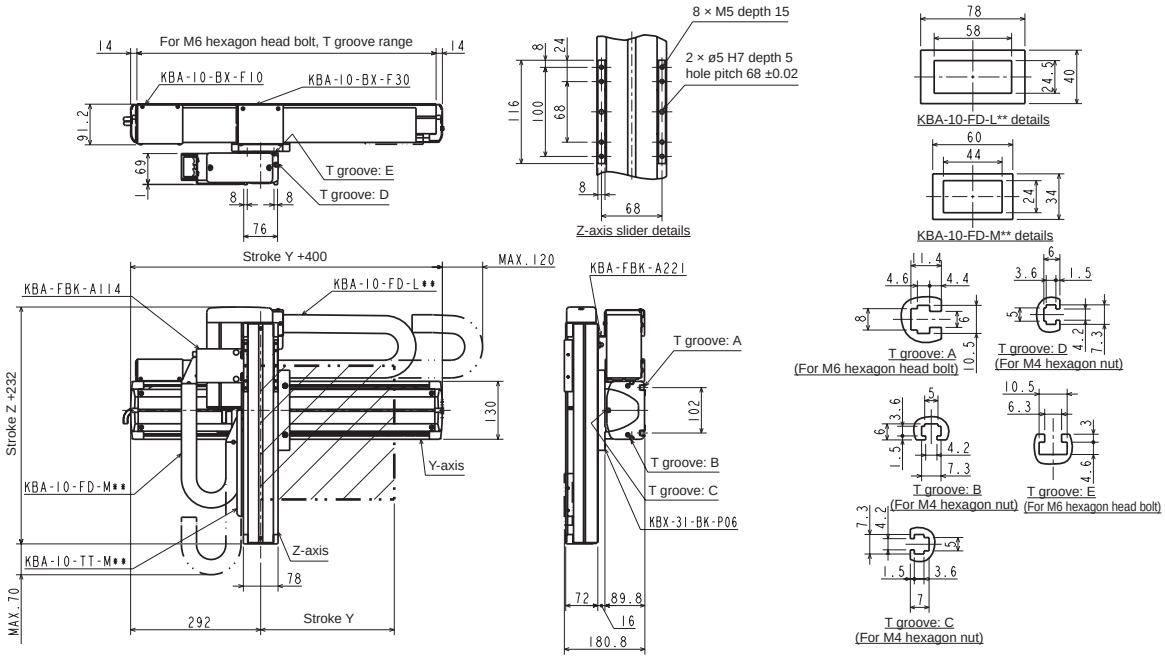

Orthogonal axis specifications: Y-Z flexible duct specifications

Specifications

Descriptions		Y-axis	Z-axis
Axis		KBX-50F-ST-M20N-□0	KBX-30E-U□-M10B-□0
Stroke 100 mm units	mm	200 to 1600	100 to 1000
Max. speed	mm/s	1200 (*1)	600 (*1)
Repeatability	mm	±0.01	
Ball screw lead	mm	20	10
Motor size	W	200	With 100 brake

Acceleration/deceleration time to the max. speed setting: 0.36 sec or greater

Ball screw drive

Y-axis: ball screw drive, Straight motor axis
Z-axis: ball screw drive, Motor: Right (R)/Left (L)

(*1) For the following stroke, max. speed varies

	Stroke (mm)	Max. speed (mm/s)
Y-axis	700 to 800	1100
	900 to 1000	1000
	1100 to 1200	700
	1300	500
	1400	400
	1500	300
	1600	300
Z-axis	700	500
	800	400
	900 to 1000	300

Max. load capacity (kg) (*2)	Z-axis stroke									
	100 mm	200 mm	300 mm	400 mm	500 mm	600 mm	700 mm	800 mm	900 mm	1000 mm
	12.0	12.0	12.0	12.0	12.0	12.0	12.0	12.0	12.0	12.0

(*2) The load capacity when using regenerative discharge unit KCA-ABSU-2000.

Dimensions

R: Right-handed

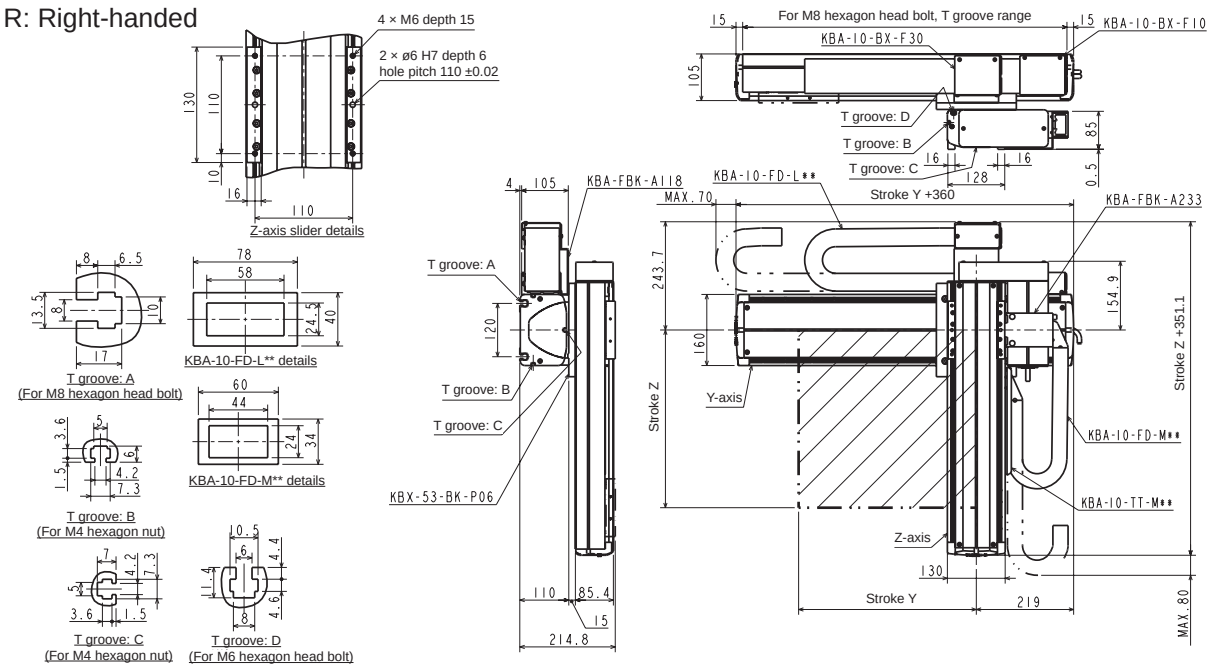

L: Left-handed

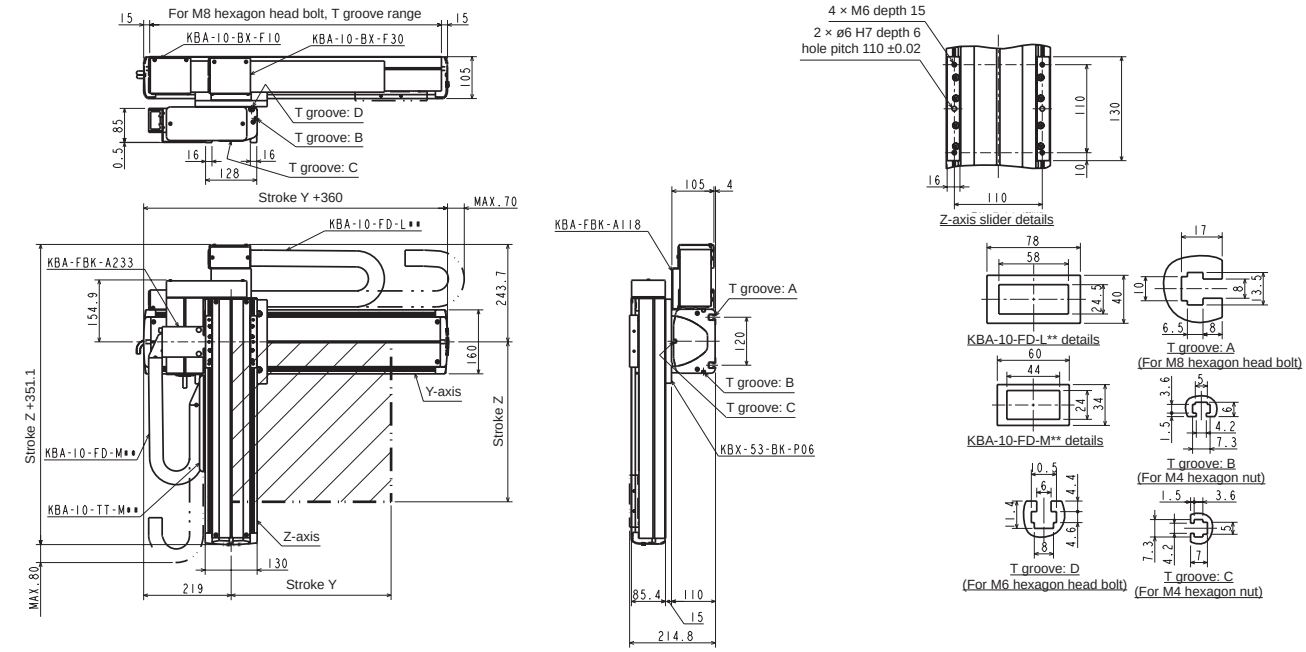

Orthogonal axis specifications: Y-Z flexible duct specifications

Specifications

Descriptions		Y-axis	Z-axis
Axis		KBX-50F-ST-M20N-□0	KBX-30F-U□-M10B-□0
Stroke 100 mm units	mm	200 to 1600	100 to 1000
Max. speed	mm/s	1200 (*1)	600 (*1)
Repeatability	mm	±0.01	
Ball screw lead	mm	20	10
Motor size	W	200	With 200 brake

Acceleration/deceleration time to the max. speed setting: 0.36 sec or greater

Ball screw drive

Y-axis: ball screw drive, Straight motor axis
Z-axis: ball screw drive, Motor: Right (R)/Left (L)

(*1) For the following stroke, max. speed varies

	Stroke (mm)	Max. speed (mm/s)
Y-axis	700 to 800	1100
	900 to 1000	1000
	1100 to 1200	700
	1300	500
	1400	400
	1500	300
	1600	300
Z-axis	700	500
	800	400
	900 to 1000	300

Max. load capacity (kg) (*2)	Z-axis stroke									
	100 mm	200 mm	300 mm	400 mm	500 mm	600 mm	700 mm	800 mm	900 mm	1000 mm
	20.0	20.0	20.0	20.0	20.0	20.0	20.0	20.0	20.0	19.0

(*2) The load capacity when using regenerative discharge unit KCA-ABSU-2000.

Dimensions

R: Right-handed

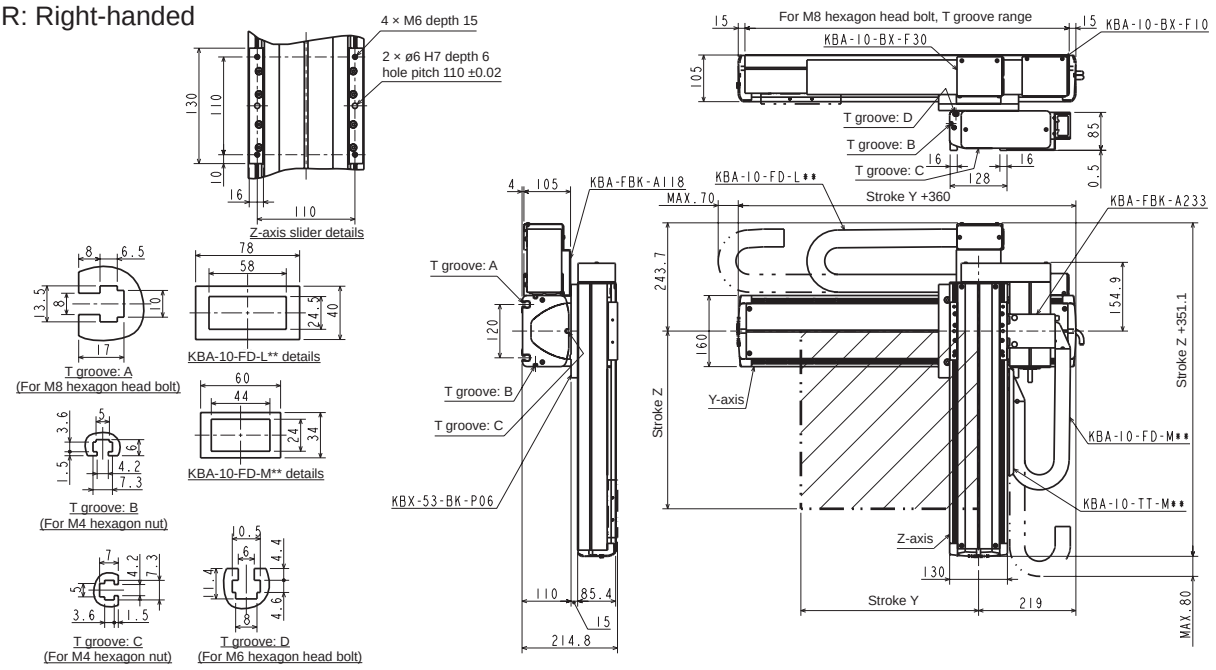

L: Left-handed

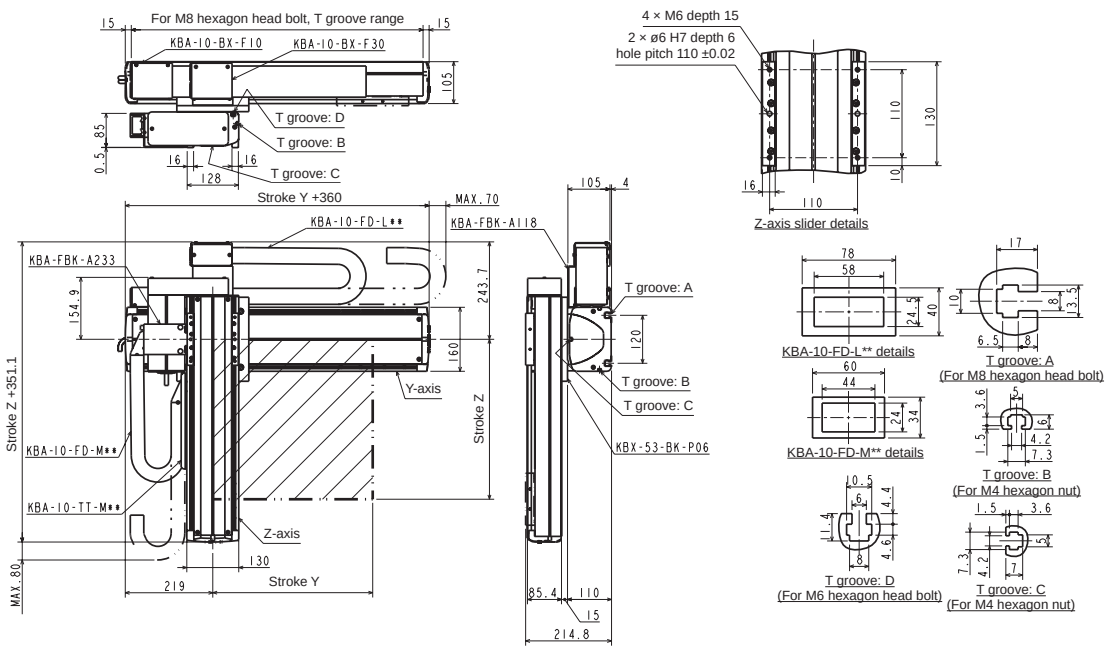

Orthogonal axis specifications: Y-Z flexible duct specifications

Specifications

Descriptions		Y-axis	Z-axis
Axis		KBX-10E-B□-S21N-□5	KBX-T7D-ST-M06B-□□
Stroke Y-axis 100 mm units Z-axis 50 mm units	mm	150 to 2550	50 to 600
Max. speed	mm/s	1000	400 (*1)
Repeatability	mm	±0.04	±0.02
Ball screw lead	mm	21 or equiv.	6
Motor size	W	100	With 50 brake

Acceleration/deceleration time to the max. speed setting: 0.36 sec or greater

Timing belt drive

Y-axis: timing belt drive
Motor: Right (R)/Left (L)
Z-axis: ball screw drive
Straight motor axis

(*1) For the following stroke, max. speed varies

	Stroke (mm)	Max. speed (mm/s)
Z-axis	600	340

Max. load capacity (kg)	Z-axis stroke											
	50 mm	100 mm	150 mm	200 mm	250 mm	300 mm	350 mm	400 mm	450 mm	500 mm	550 mm	600 mm
	4.0	4.0	4.0	4.0	4.0	4.0	4.0	4.0	3.5	3.5	2.0	2.0

Dimensions

R: Right-handed

The value in ( ) is compatible with X-axis stroke 1,050 mm or more

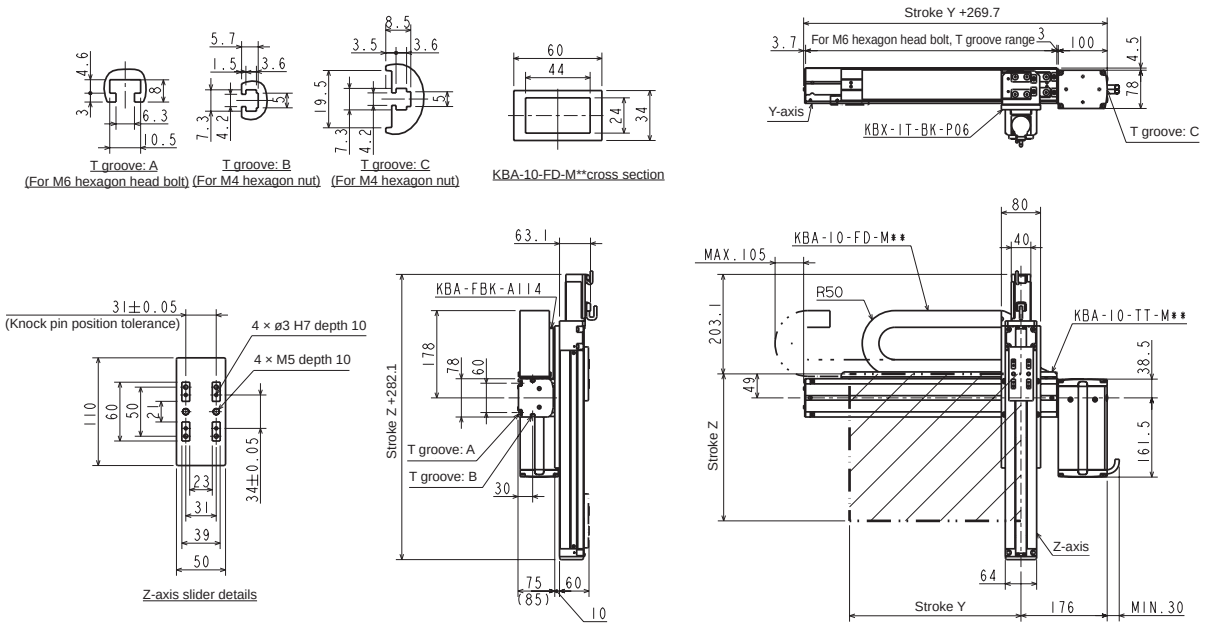

L: Left-handed

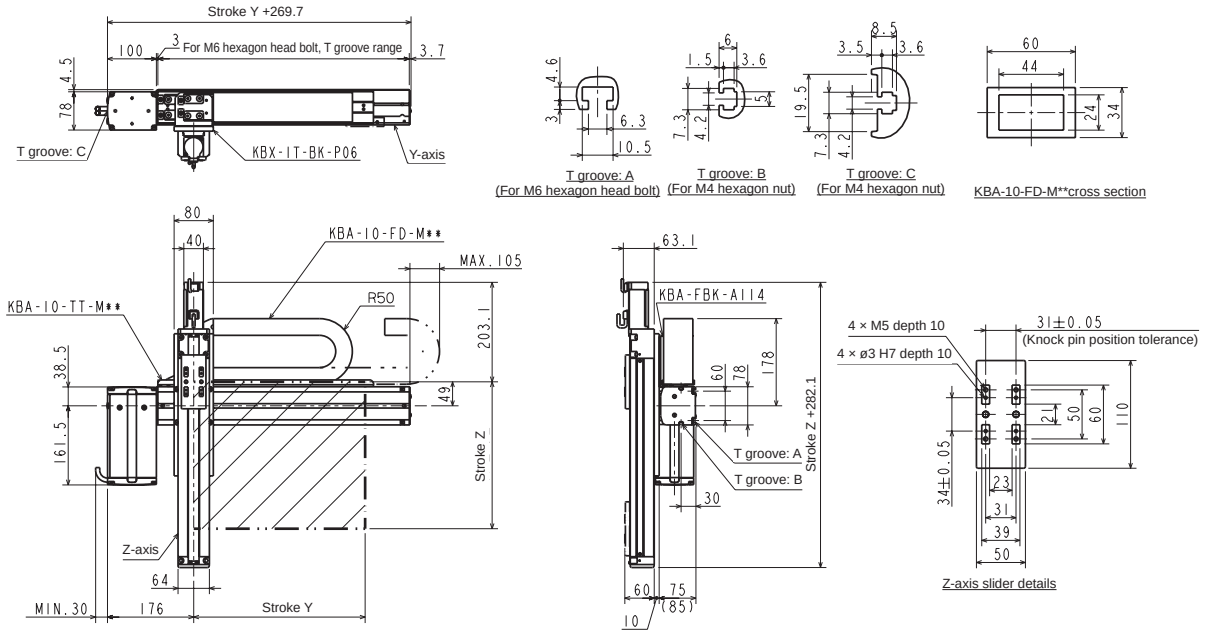

Orthogonal axis specifications: Y-Z flexible duct specifications

Specifications

Descriptions		Y-axis	Z-axis
Axis		KBX-10E-B□-M21N-□0	KBX-10E-U□-S10B-□5
Stroke 100 mm units	mm	100 to 2500	150 to 550
Max. speed	mm/s	1000	600
Repeatability	mm	±0.04	±0.01
Ball screw lead	mm	21 or equiv.	10
Motor size	W	100	With 100 brake

Acceleration/deceleration time to the max. speed setting: 0.48 sec or greater

Timing belt drive

Y-axis: timing belt drive
Motor: Right (R)/Left (L)
Z-axis: ball screw drive
Motor: Right (R)/Left (L)

Max. load capacity (kg)	Z-axis stroke				
	150 mm	250 mm	350 mm	450 mm	550 mm
	8.0	8.0	6.0	5.0	3.0

Dimensions

R: Right-handed

The value in ( ) is compatible with X-axis stroke 1,050 mm or more

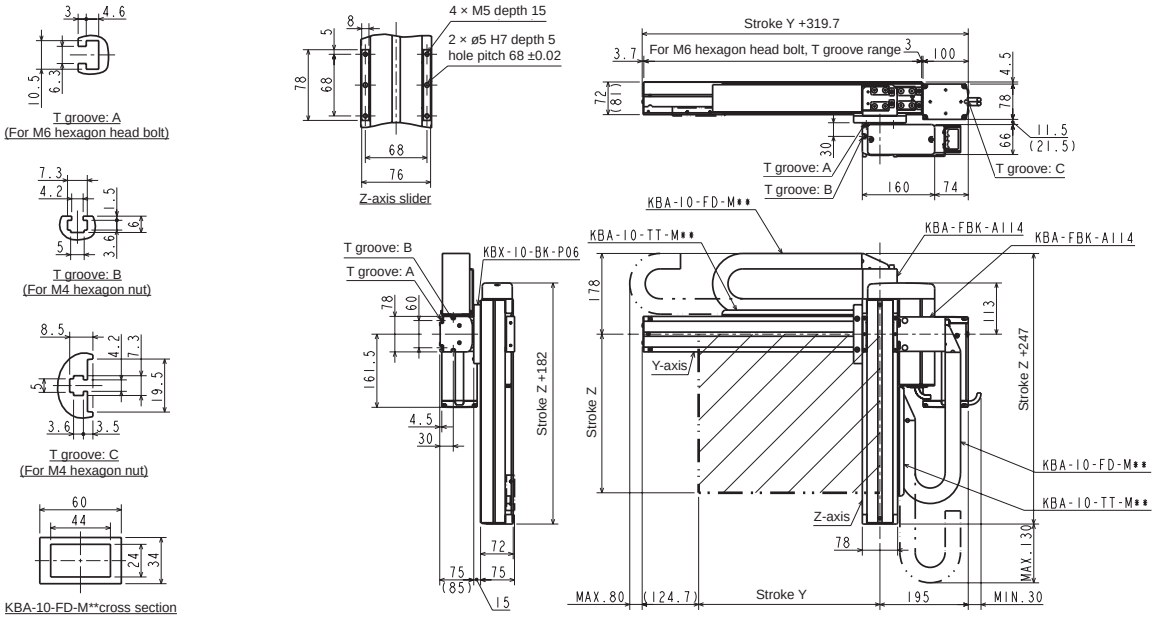

L: Left-handed

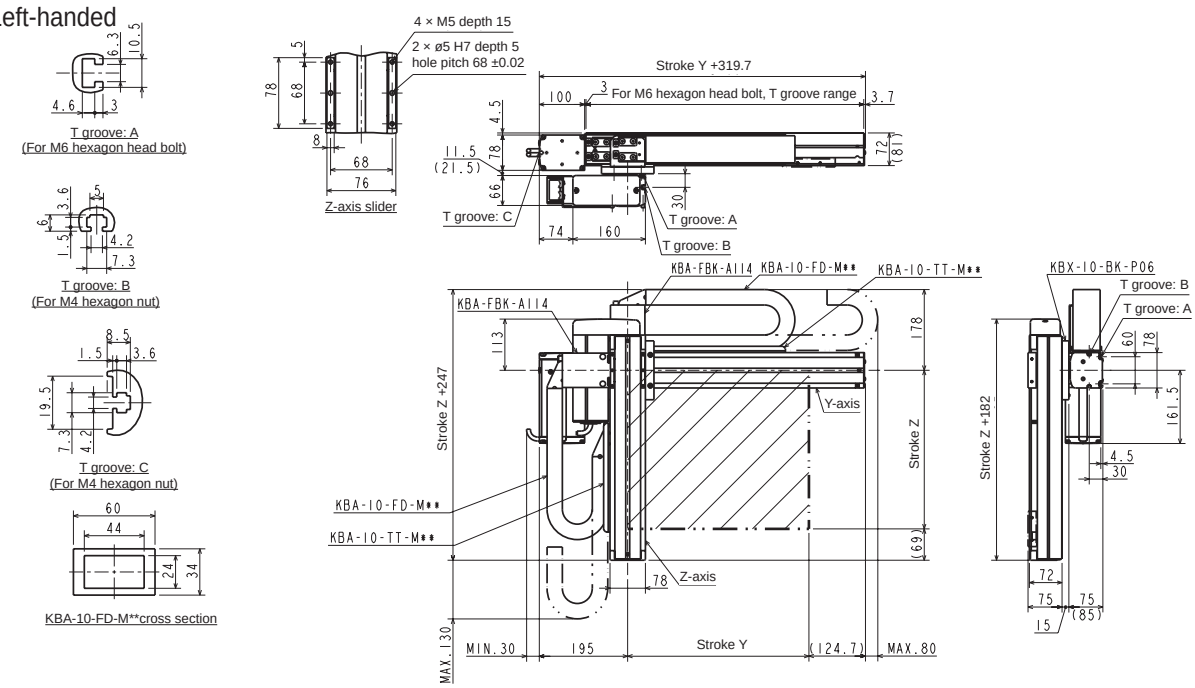

Orthogonal axis specifications: Y-Z flexible duct specifications

Specifications

Descriptions		Y-axis	Z-axis
Axis		KBX-30E-B□-M21N-□0	KBX-10E-U□-M10B-□0
Stroke 100 mm units	mm	100 to 3200	100 to 800
Max. speed	mm/s	1000	600 (*1)
Repeatability	mm	±0.04	±0.01
Ball screw lead	mm	21 or equiv.	10
Motor size	W	100	With 100 brake

Acceleration/deceleration time to the max. speed setting: 0.48 sec or greater

Timing belt drive

Y-axis: timing belt drive
Motor: Right (R)/Left (L)
Z-axis: ball screw drive
Motor: Right (R)/Left (L)

(*1) For the following stroke, max. speed varies

	Stroke (mm)	Max. speed (mm/s)
Z-axis	700	500
	800	400

Max. load capacity (kg)	Z-axis stroke							
	100 mm	200 mm	300 mm	400 mm	500 mm	600 mm	700 mm	800 mm
	6.0	6.0	5.0	4.0	4.0	3.0	1.0	1.0

Dimensions

R: Right-handed

The value in ( ) is compatible with X-axis stroke 1,850 mm or more

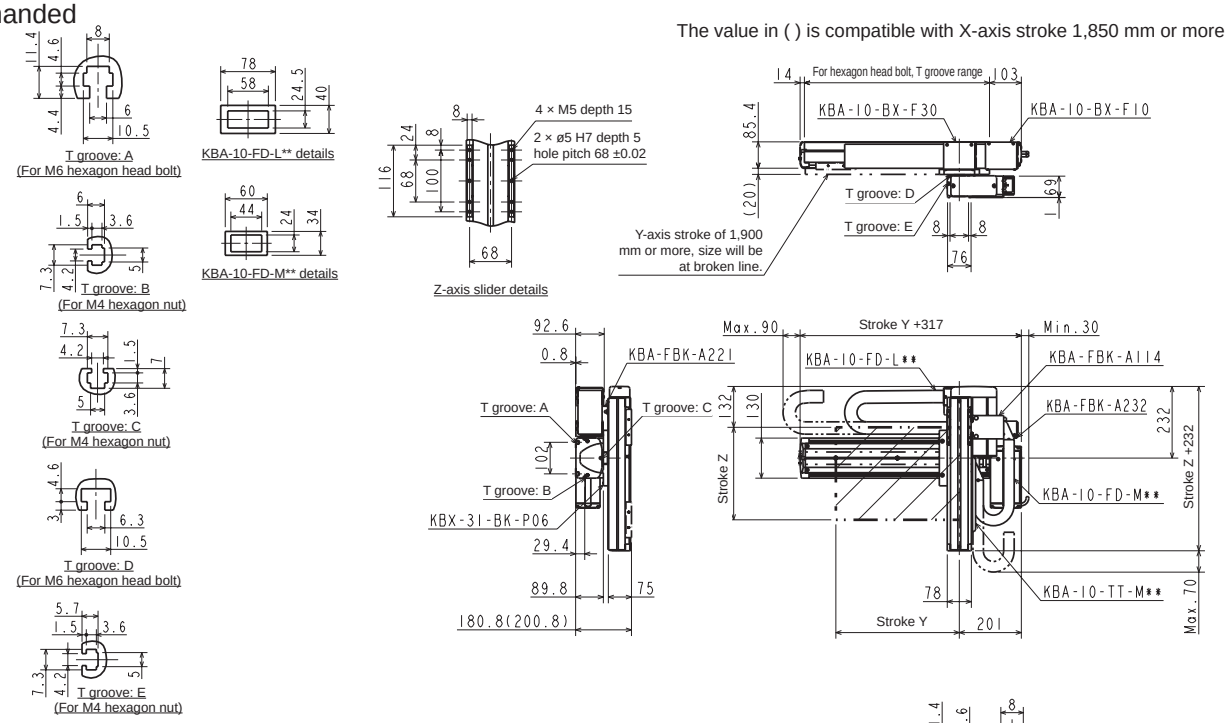

L: Left-handed

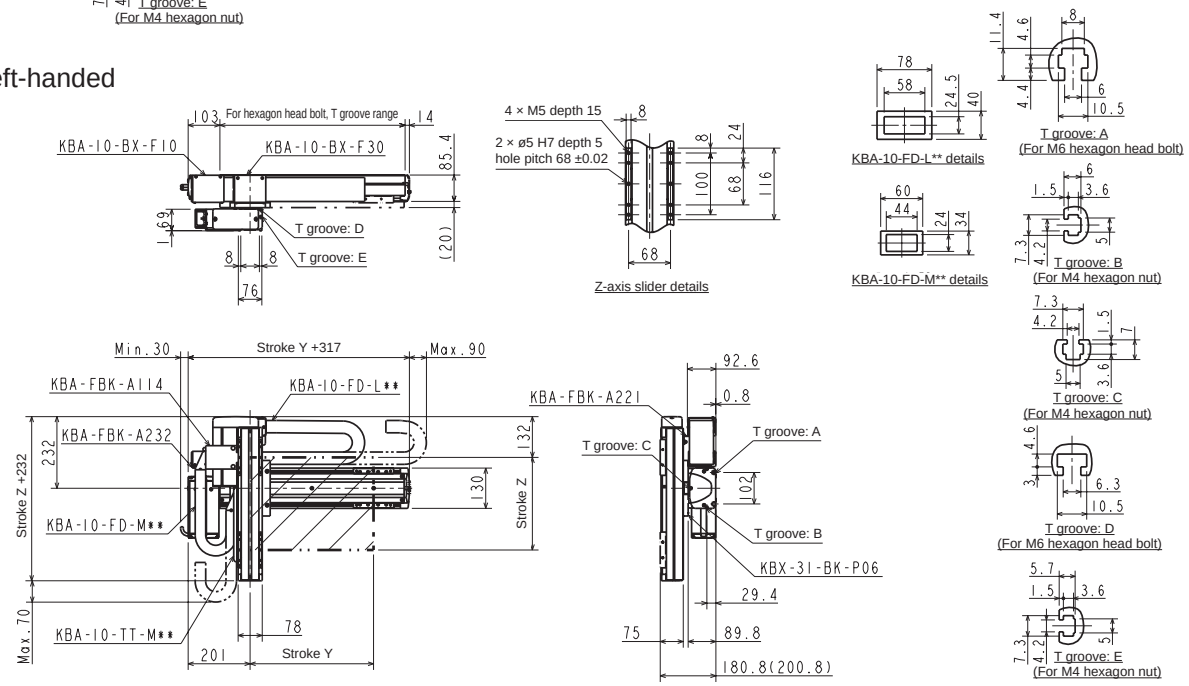

Orthogonal axis specifications: Y-Z flexible duct specifications

Specifications

Descriptions		Y-axis	Z-axis
Axis		KBX-30F-B□-M21N-□0	KBX-10E-U□-M10B-□0
Stroke 100 mm units	mm	100 to 3200	100 to 1000
Max. speed	mm/s	1000	600 (*1)
Repeatability	mm	±0.04	±0.01
Ball screw lead	mm	21 or equiv.	10
Motor size	W	200	With 100 brake

Acceleration/deceleration time to the max. speed setting: 0.36 sec or greater

Timing belt drive

Y-axis: timing belt drive
Motor: Right (R)/Left (L)
Z-axis: ball screw drive
Motor: Right (R)/Left (L)

(*1) For the following stroke, max. speed varies

	Stroke (mm)	Max. speed (mm/s)
Z-axis	700	500
	800	400
	900 to 1000	300

Max. load capacity (kg) (*2)	Z-axis stroke									
	100 mm	200 mm	300 mm	400 mm	500 mm	600 mm	700 mm	800 mm	900 mm	1000 mm
	12.0	12.0	12.0	12.0	12.0	12.0	10.0	5.0	4.0	4.0

(*2) The load capacity when using regenerative discharge unit KCA-ABSU-2000.

Dimensions

R: Right-handed

The value in ( ) is compatible with X-axis stroke 1,850 mm or more

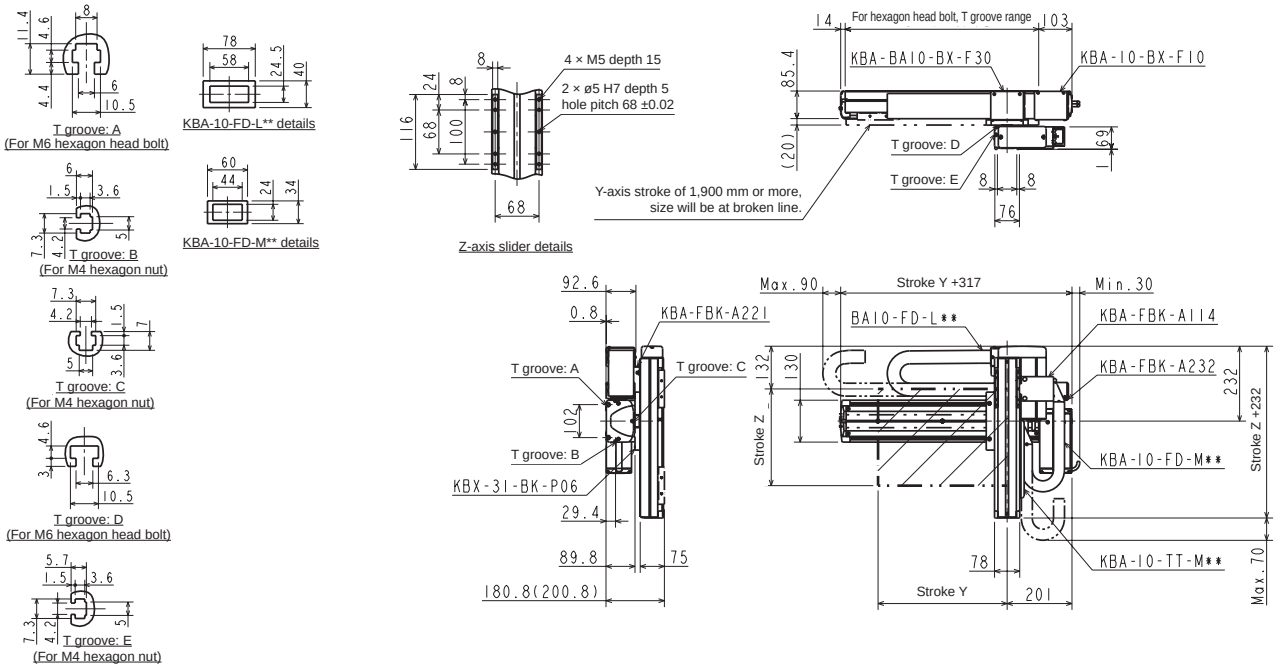

L: Left-handed

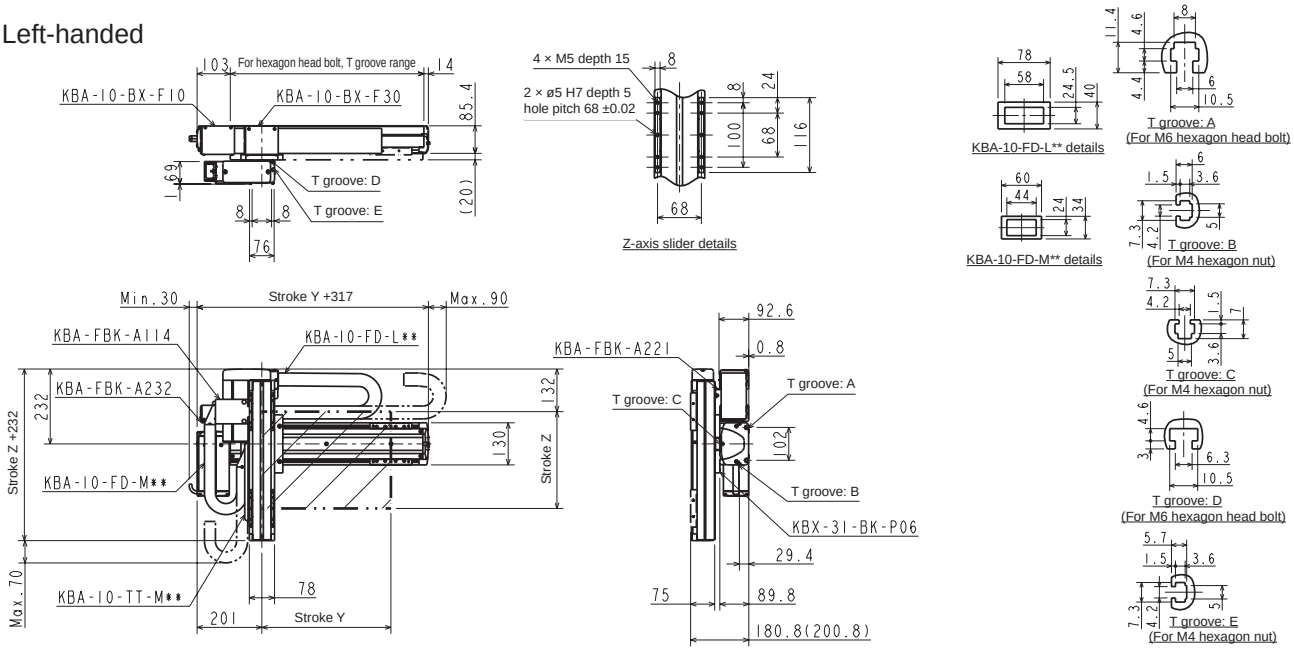

Orthogonal axis specifications: Y-Z flexible duct specifications

Specifications

Descriptions		Y-axis	Z-axis
Axis		KBX-50F-B□-M21N-□0	KBX-30E-U□-M10B-□0
Stroke 100 mm units	mm	200 to 3500	100 to 1000
Max. speed	mm/s	1000	600 (*1)
Repeatability	mm	±0.04	±0.01
Ball screw lead	mm	21 or equiv.	10
Motor size	W	200	With 100 brake

Acceleration/deceleration time to the max. speed setting: 0.36 sec or greater

Timing belt drive

Y-axis: timing belt drive
Motor: Right (R)/Left (L)
Z-axis: ball screw drive
Motor: Right (R)/Left (L)

(*1) For the following stroke, max. speed varies

	Stroke (mm)	Max. speed (mm/s)
Z-axis	700	500
	800	400
	900 to 1000	300

Max. load capacity (kg) (*2)	Z-axis stroke									
	100 mm	200 mm	300 mm	400 mm	500 mm	600 mm	700 mm	800 mm	900 mm	1000 mm
	12.0	12.0	12.0	12.0	12.0	12.0	12.0	12.0	12.0	12.0

(*2) The load capacity when using regenerative discharge unit KCA-ABSU-2000.

Dimensions

R: Right-handed

The value in ( ) is compatible with X-axis stroke 1,850 mm or more

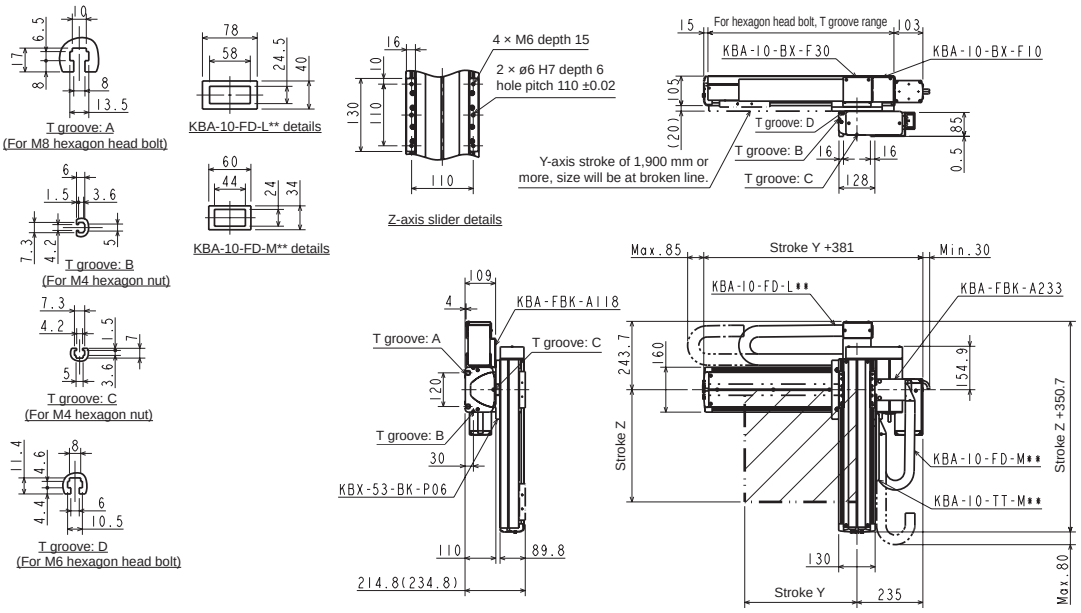

L: Left-handed

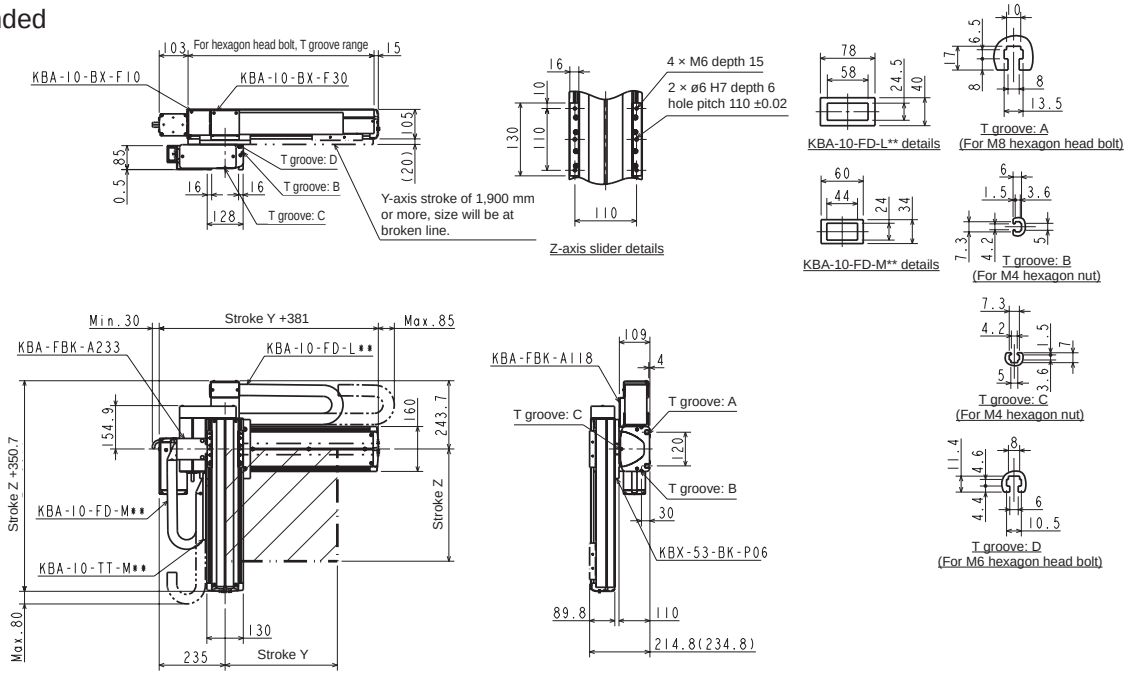

Orthogonal axis specifications: Y-Z flexible duct specifications

Specifications

Descriptions		Y-axis	Z-axis
Axis		KBX-50F-B□-M21N-□0	KBX-30F-U□-M10B-□0
Stroke 100 mm units	mm	200 to 3500	100 to 1000
Max. speed	mm/s	1000	600 (*1)
Repeatability	mm	±0.04	±0.01
Ball screw lead	mm	21 or equiv.	10
Motor size	W	200	With 200 brake

Acceleration/deceleration time to the max. speed setting: 0.36 sec or greater

Timing belt drive

Y-axis: timing belt drive
Motor: Right (R)/Left (L)
Z-axis: ball screw drive
Motor: Right (R)/Left (L)

(*1) For the following stroke, max. speed varies

	Stroke (mm)	Max. speed (mm/s)
Z-axis	700	500
	800	400
	900 to 1000	300

Max. load capacity (kg) (*2)	Z-axis stroke									
	100 mm	200 mm	300 mm	400 mm	500 mm	600 mm	700 mm	800 mm	900 mm	1000 mm
	20.0	20.0	20.0	20.0	20.0	20.0	19.0	17.0	16.0	15.0

(*2) The load capacity when using regenerative discharge unit KCA-ABSU-2000.

Dimensions

R: Right-handed

The value in ( ) is compatible with X-axis stroke 1,850 mm or more

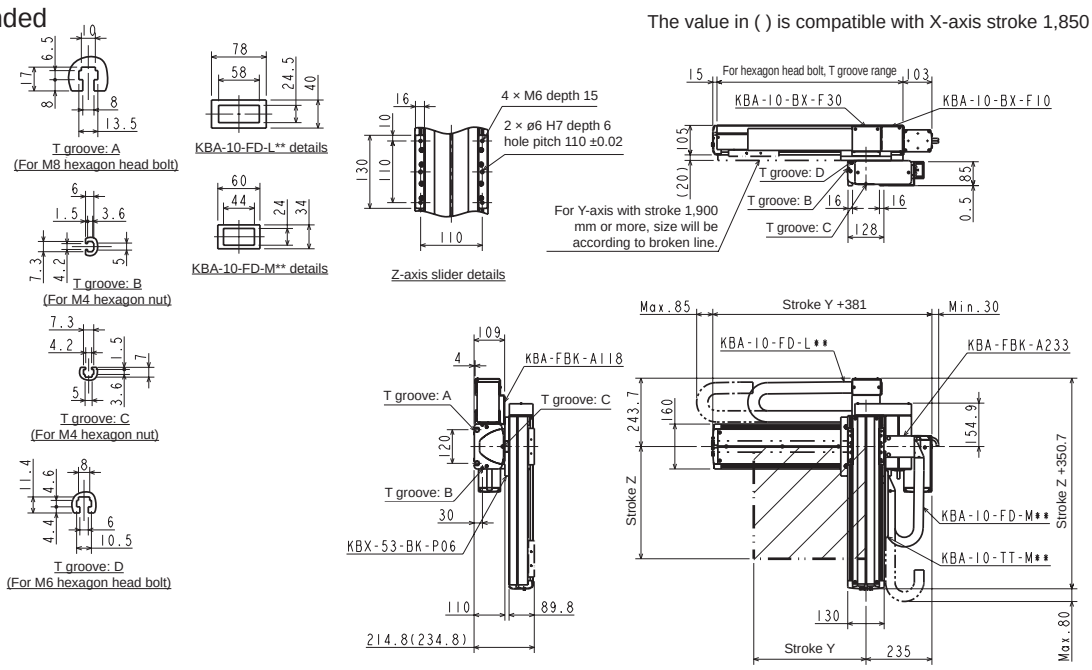

L: Left-handed

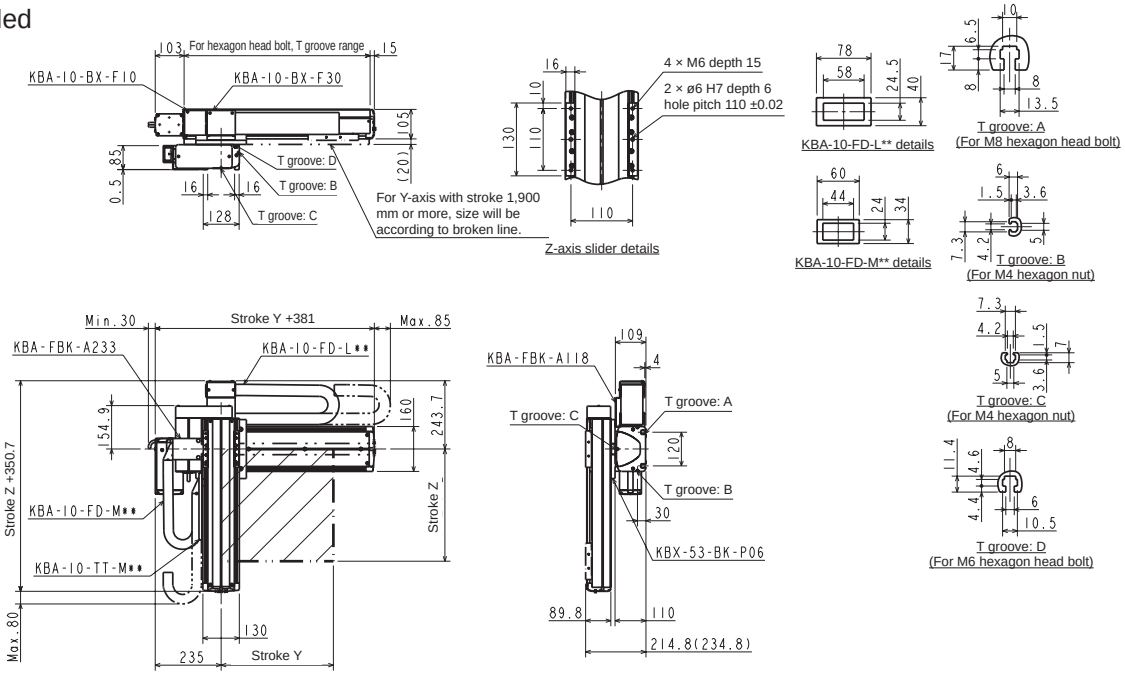

Orthogonal axis specifications: Z-Y flexible duct specifications

Specifications

Descriptions		Z-axis	Y-axis
Axis		KBX-10E-ST-M05B-□0	KBX-10E-ST-S20N-□5
Stroke 100 mm units	mm	100 to 1000	150 to 650
Max. speed	mm/s	300 (*1)	1200
Repeatability	mm	±0.01	
Ball screw lead	mm	5	20
Motor size	W	With 100 brake	100

Acceleration/deceleration time to the max. speed setting: 0.36 sec or greater

Ball screw drive

Z-axis: ball screw drive
Straight motor axis
Y-axis: ball screw drive
Straight motor axis

(*1) For the following stroke, max. speed varies

	Stroke (mm)	Max. speed (mm/s)
Z-axis	700	250
	800	200
	900 to 1000	150

Max. load capacity (kg) (*2)	Y-axis stroke					
	150 mm	250 mm	350 mm	450 mm	550 mm	650 mm
	15.0	12.0	9.0	6.5	5.0	3.5

(*2) The load capacity when using regenerative discharge unit KCA-ABSU-2000.

Dimensions

R: Right-handed

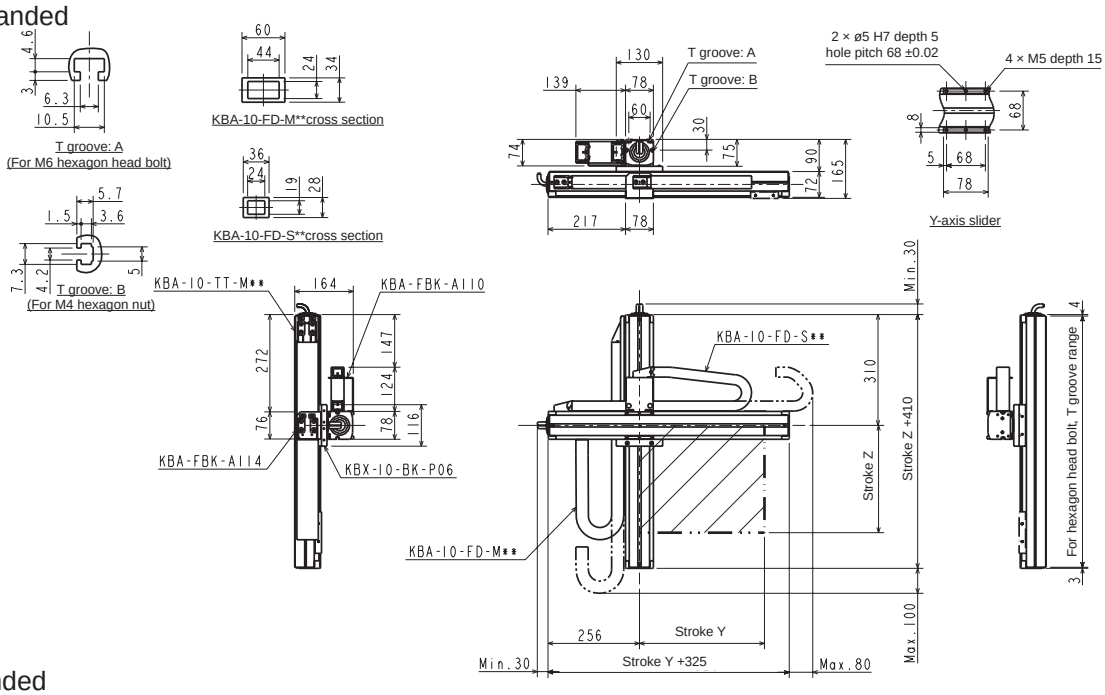

L: Left-handed

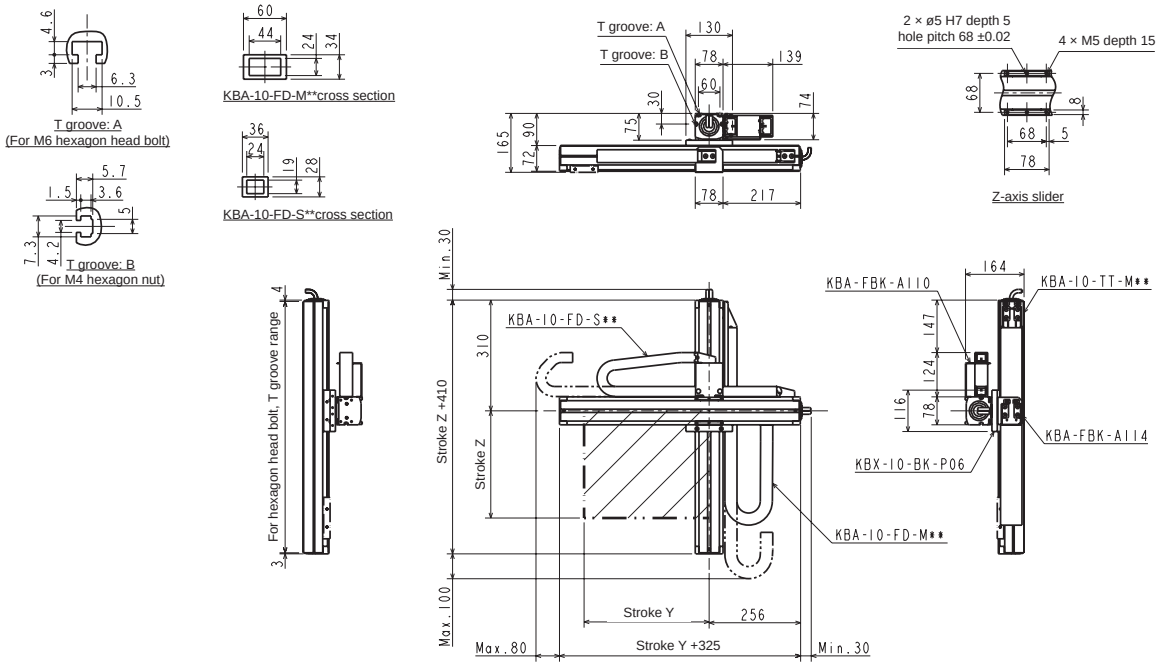

Orthogonal axis specifications: Z-Y flexible duct specifications

Specifications

Descriptions		Z-axis	Y-axis
Axis		KBX-30E-ST-M05B-□5	KBX-10E-ST-M20N-□0
Stroke 100 mm units	mm	150 to 1050	100 to 900
Max. speed	mm/s	300 (*1)	1200 (*1)
Repeatability	mm	±0.01	
Ball screw lead	mm	5	20
Motor size	W	With 100 brake	100

Acceleration/deceleration time to the max. speed setting: 0.36 sec or greater

Ball screw drive

Z-axis: ball screw drive
Straight motor axis
Y-axis: ball screw drive
Straight motor axis

(*1) For the following stroke, max. speed varies

	Stroke (mm)	Max. speed (mm/s)
Z-axis	750	250
	850	200
	950 to 1050	150
Y-axis	700	1000
	800	800
	900	600

Max. load capacity (kg) (*2)	Y-axis stroke								
	100 mm	200 mm	300 mm	400 mm	500 mm	600 mm	700 mm	800 mm	900 mm
	15.0	15.0	14.0	12.0	9.0	7.0	5.0	3.0	1.0

(*2) The load capacity when using regenerative discharge unit KCA-ABSU-2000.

Dimensions

R: Right-handed

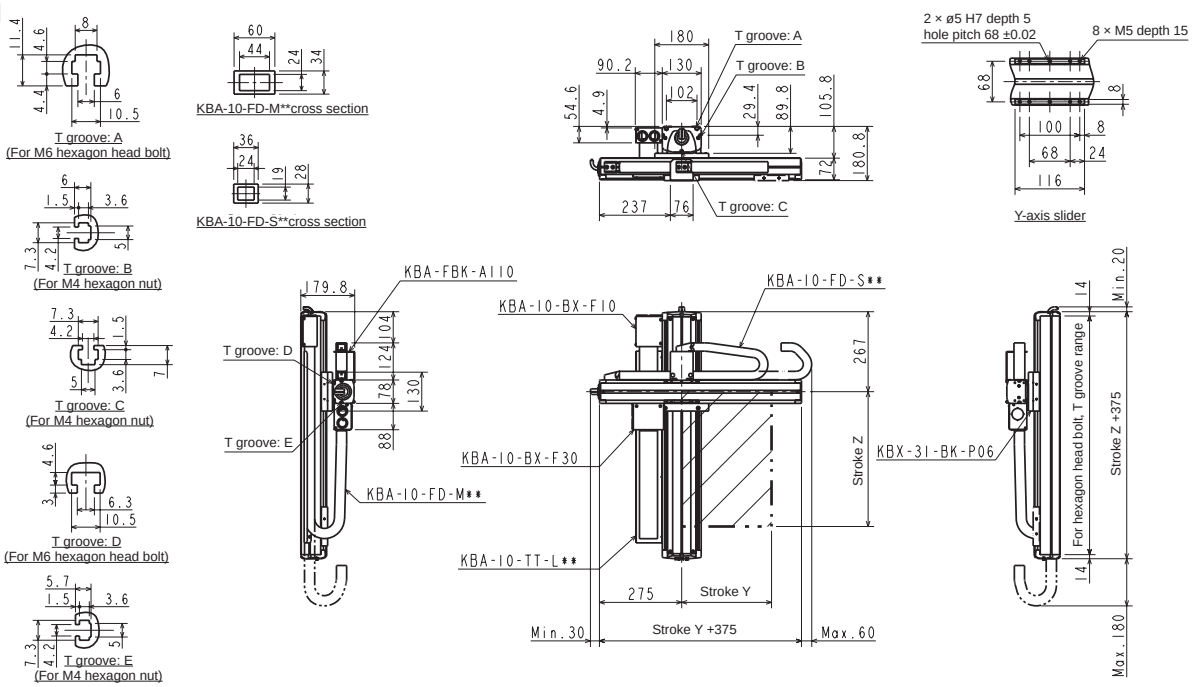

L: Left-handed

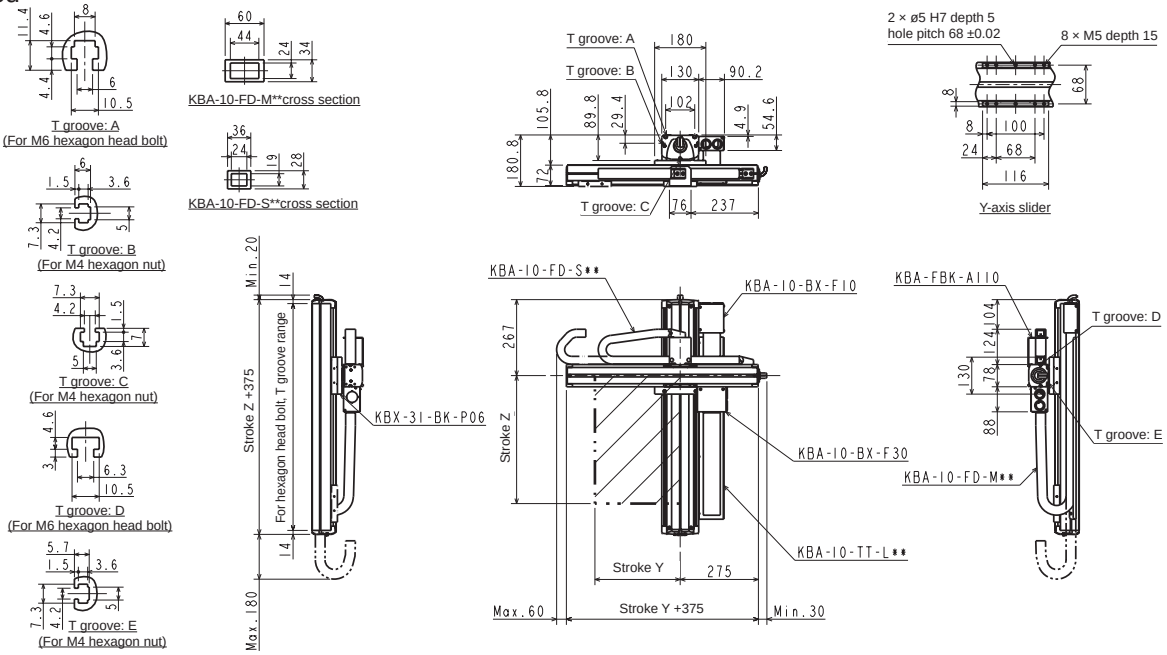

Orthogonal axis specifications: Z-Y flexible duct specifications

Specifications

Descriptions		Z-axis	Y-axis
Axis		KBX-30F-ST-M05B-□0	KBX-10E-ST-M20N-□0
Stroke 100 mm units	mm	100 to 1000	100 to 900
Max. speed	mm/s	300 (*1)	1200 (*1)
Repeatability	mm	±0.01	
Ball screw lead	mm	5	20
Motor size	W	With 200 brake	100

Acceleration/deceleration time to the max. speed setting: 0.36 sec or greater

Ball screw drive

Z-axis: ball screw drive
Straight motor axis
Y-axis: ball screw drive
Straight motor axis

(*1) For the following stroke, max. speed varies

	Stroke (mm)	Max. speed (mm/s)
Z-axis	700	250
	800	200
	900 to 1000	150
Y-axis	700	1000
	800	800
	900	600

Max. load capacity (kg) (*2)	Y-axis stroke								
	100 mm	200 mm	300 mm	400 mm	500 mm	600 mm	700 mm	800 mm	900 mm
	15.0	15.0	15.0	12.0	9.0	7.0	5.0	3.0	1.0

(*2) The load capacity when using regenerative discharge unit KCA-ABSU-2000.

Dimensions

R: Right-handed

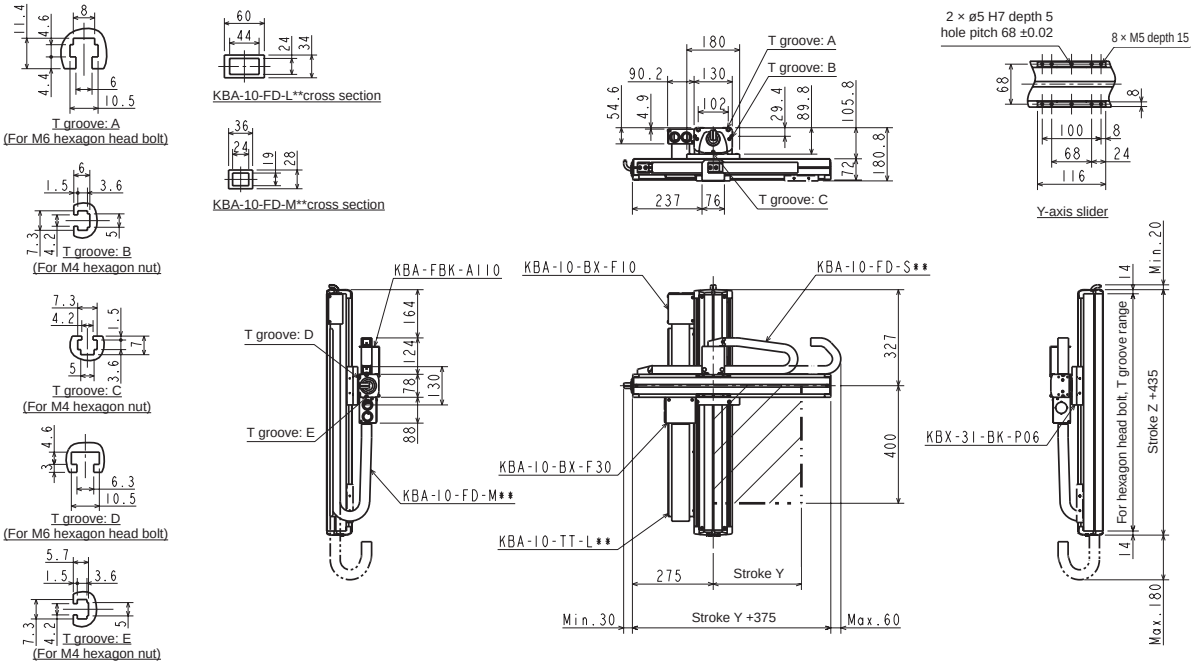

L: Left-handed

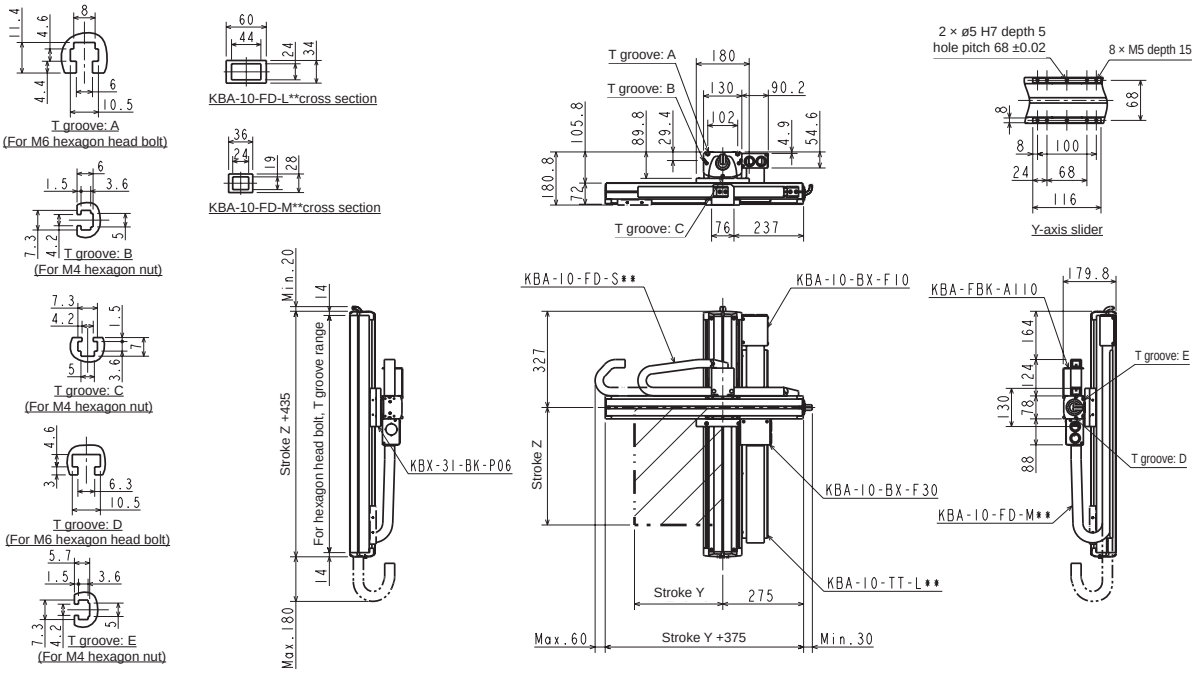

Orthogonal axis specifications: Z-Y flexible duct specifications

Specifications

Descriptions		Z-axis	Y-axis
Axis		KBX-50F-ST-M05B-□0	KBX-30E-ST-M20N-□5
Stroke 100 mm units	mm	200 to 1600	150 to 1050
Max. speed	mm/s	300 (*1)	1200 (*1)
Repeatability	mm	±0.01	
Ball screw lead	mm	5	20
Motor size	W	With 200 brake	100

Acceleration/deceleration time to the max. speed setting: 0.36 sec or greater

Ball screw drive

Z-axis: ball screw drive, Straight motor axis
Y-axis: ball screw drive, Straight motor axis

(*1) For the following stroke, max. speed varies

	Stroke (mm)	Max. speed (mm/s)
Z-axis	700 to 800	280
	900 to 1000	250
	1100 to 1200	180
	1300	130
	1400	100
	1500	80
	1600	80
Y-axis	750	1000
	850	800
	950 to 1050	600

Max. load capacity (kg) (*2)	Y-axis stroke									
	150 mm	250 mm	350 mm	450 mm	550 mm	650 mm	750 mm	850 mm	950 mm	1050 mm
	20.0	20.0	20.0	20.0	20.0	20.0	18.0	14.0	11.0	7.0

(*2) The load capacity when using regenerative discharge unit KCA-ABSU-2000.

Dimensions

R: Right-handed

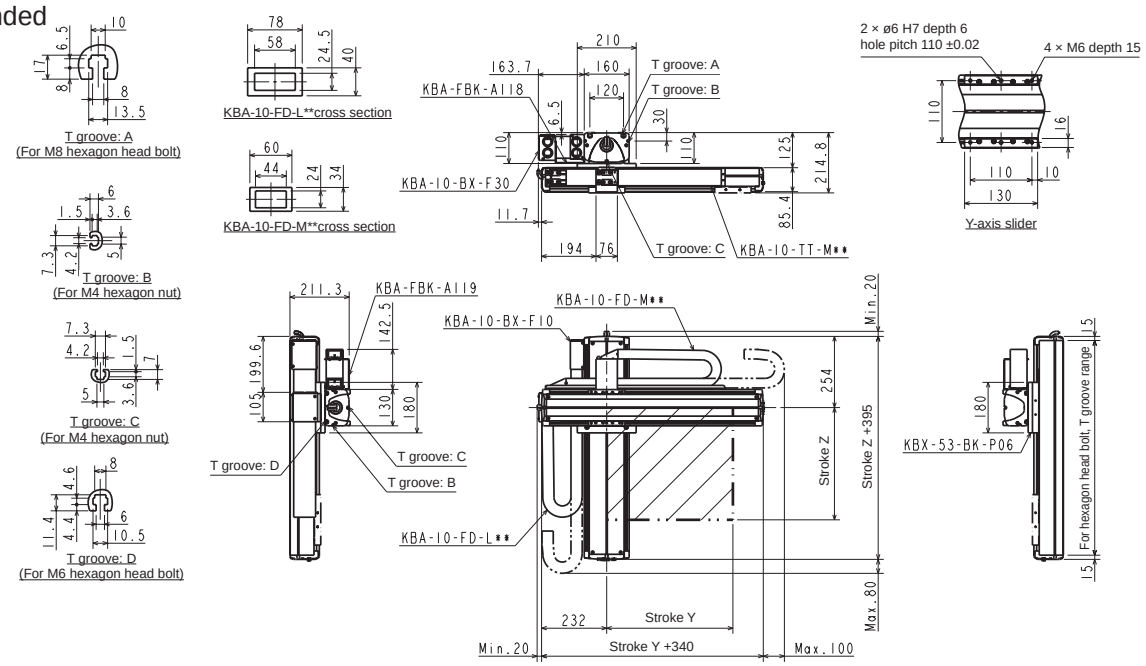

L: Left-handed

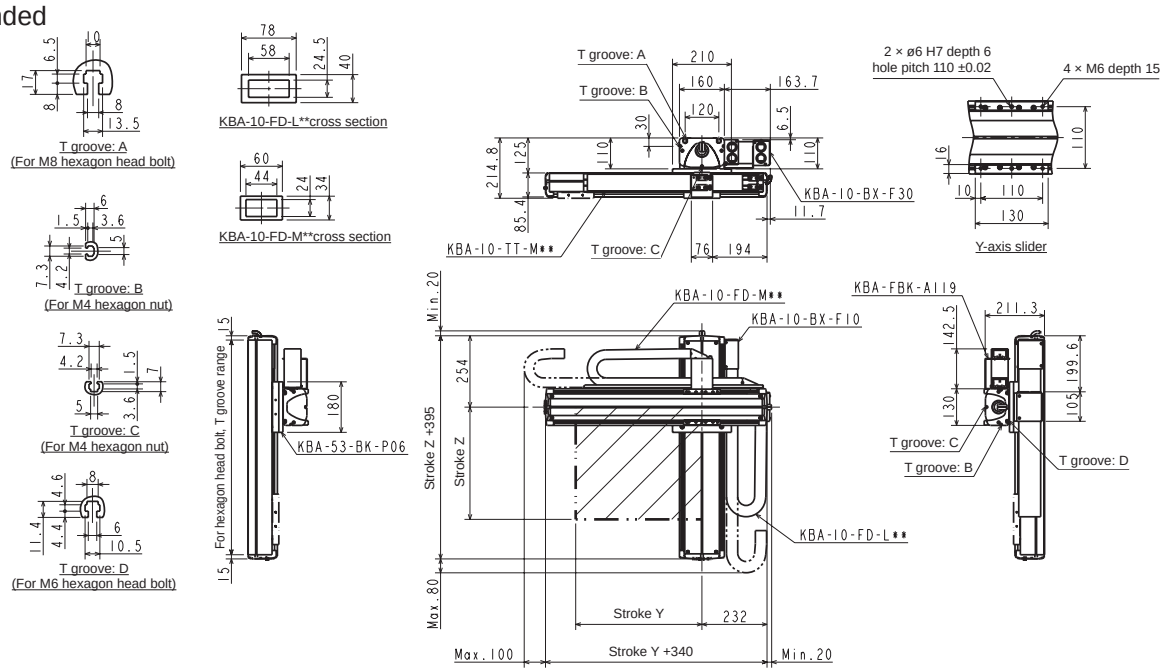

Orthogonal axis specifications: Z-Y flexible duct specifications

Specifications

Descriptions		Z-axis	Y-axis
Axis		KBX-50F-ST-M05B-□0	KBX-30F-ST-M20N-□0
Stroke 100 mm units	mm	200 to 1600	100 to 1000
Max. speed	mm/s	300 (*1)	1200 (*1)
Repeatability	mm	±0.01	
Ball screw lead	mm	5	20
Motor size	W	With 200 brake	200

Acceleration/deceleration time to the max. speed setting: 0.36 sec or greater

Ball screw drive

Z-axis: ball screw drive, Straight motor axis
Y-axis: ball screw drive, Straight motor axis

(*1) For the following stroke, max. speed varies

	Stroke (mm)	Max. speed (mm/s)
Z-axis	700 to 800	280
	900 to 1000	250
	1100 to 1200	180
	1300	130
	1400	100
	1500	80
	1600	80
Y-axis	700	1000
	800	800
	900 to 1000	600

Max. load capacity (kg) (*2)	Y-axis stroke									
	100 mm	200 mm	300 mm	400 mm	500 mm	600 mm	700 mm	800 mm	900 mm	1000 mm
	28.0	27.0	26.0	24.0	23.0	22.0	18.0	14.0	11.0	7.0

(*2) The load capacity when using regenerative discharge unit KCA-ABSU-2000.

Dimensions

R: Right-handed

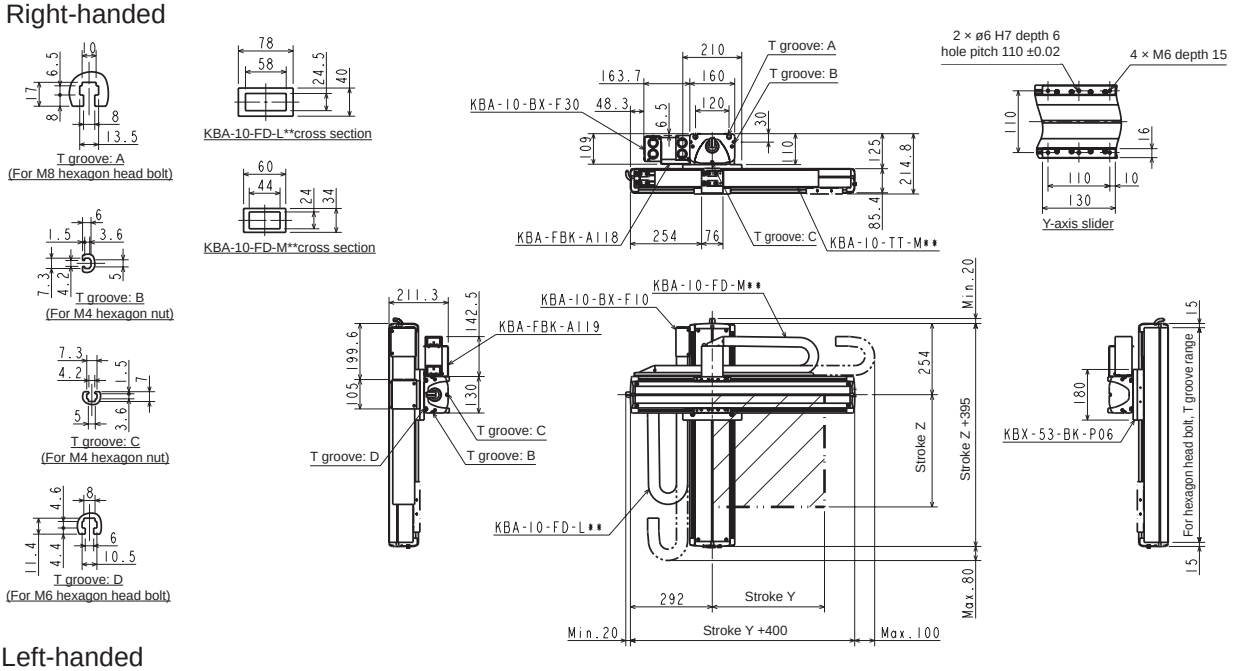

L: Left-handed

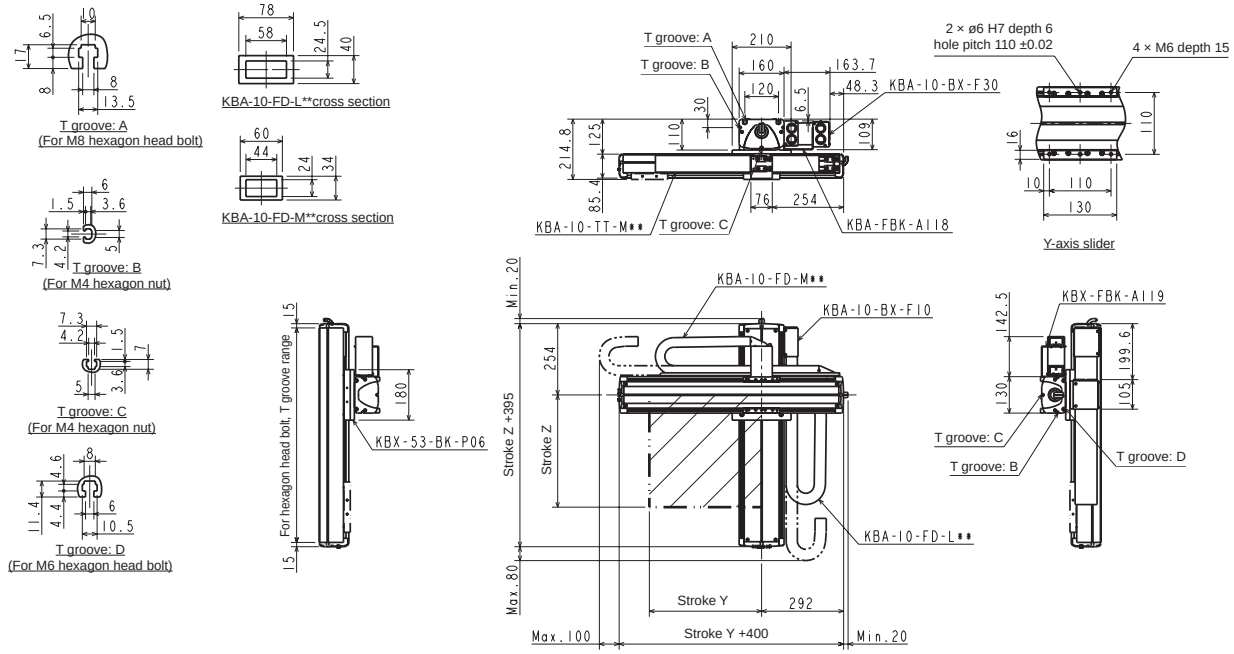

Orthogonal axis specifications: Z-Y flexible duct specifications

Specifications

Descriptions		Z-axis	Y-axis
Axis		KBX-10E-ST-M05B-□0	KBX-10E-B□-S21N-□5
Stroke 100 mm units	mm	100 to 1000	150 to 650
Max. speed	mm/s	300 (*1)	1000
Repeatability	mm	±0.01	±0.04
Ball screw lead	mm	5	21 or equiv.
Motor size	W	With 100 brake	100

Acceleration/deceleration time to the max. speed setting: 0.36 sec or greater

Timing belt drive

Z-axis: ball screw drive
Straight motor axis
Y-axis: timing belt drive
Motor: Right (R)/Right (L)

(*1) For the following stroke, max. speed varies

	Stroke (mm)	Max. speed (mm/s)
Z-axis	700	250
	800	200
	900 to 1000	150

Max. load capacity (kg) (*2)	Y-axis stroke					
	150 mm	250 mm	350 mm	450 mm	550 mm	650 mm
	15.0	12.0	9.0	6.0	5.0	3.0

(*2) The load capacity when using regenerative discharge unit KCA-ABSU-2000.

Dimensions

R: Right-handed

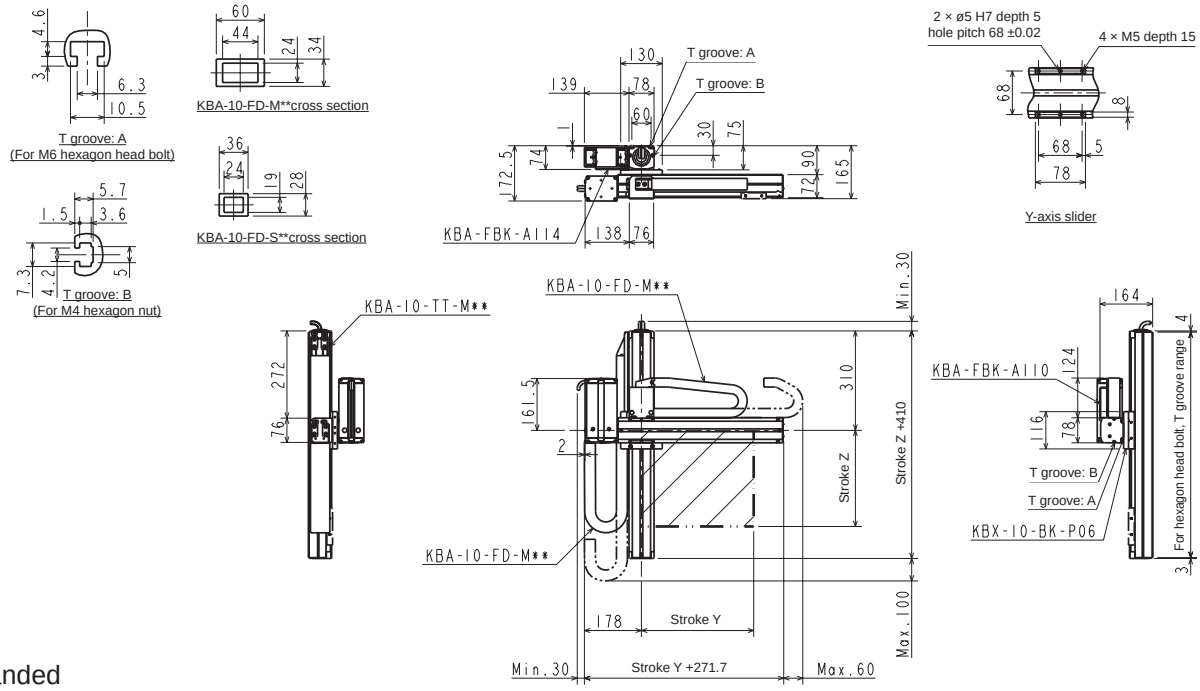

L: Left-handed

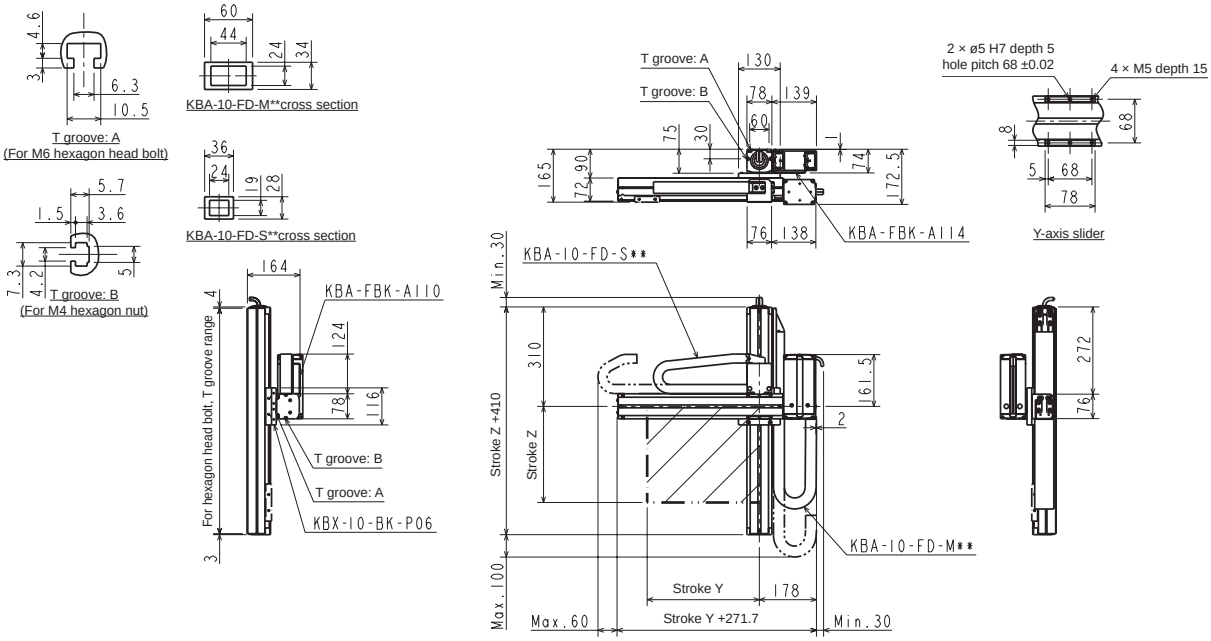

Orthogonal axis specifications: Z-Y flexible duct specifications

Specifications

Descriptions		Z-axis	Y-axis
Axis		KBX-30E-ST-M05B-□5	KBX-10E-B□-M21N-□0
Stroke 100 mm units	mm	150 to 1050	100 to 800
Max. speed	mm/s	300 (*1)	1000
Repeatability	mm	±0.01	±0.04
Ball screw lead	mm	5	21 or equiv.
Motor size	W	With 100 brake	100

Acceleration/deceleration time to the max. speed setting: 0.36 sec or greater

Timing belt drive

Z-axis: ball screw drive
Straight motor axis
Y-axis: timing belt drive
Motor: Right (R)/Left (L)

(*1) For the following stroke, max. speed varies

	Stroke (mm)	Max. speed (mm/s)
Z-axis	750	250
	850	200
	950 to 1050	150

Max. load capacity (kg) (*2)	Y-axis stroke							
	100 mm	200 mm	300 mm	400 mm	500 mm	600 mm	700 mm	800 mm
	15.0	15.0	15.0	12.0	8.0	6.0	4.0	1.0

(*2) The load capacity when using regenerative discharge unit KCA-ABSU-2000.

Dimensions

R: Right-handed

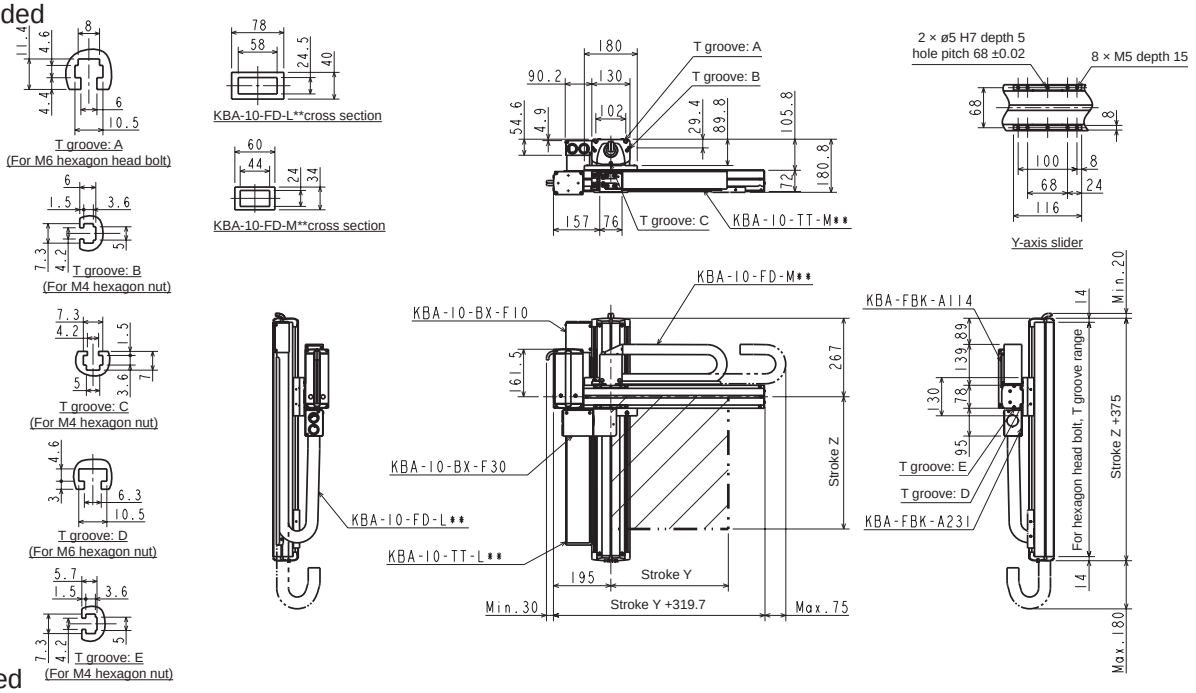

L: Left-handed

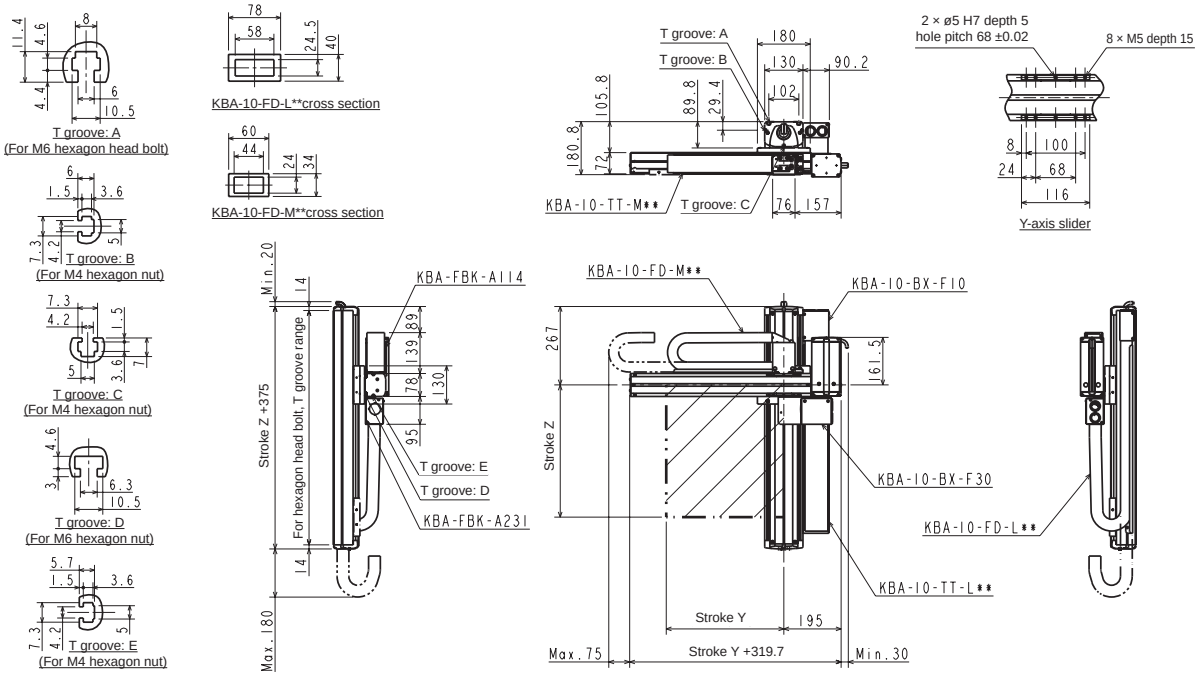

Orthogonal axis specifications: Z-Y flexible duct specifications

Specifications

Descriptions		Z-axis	Y-axis
Axis		KBX-30F-ST-M05B-□0	KBX-10E-B□-M21N-□0
Stroke 100 mm units	mm	100 to 1000	100 to 900
Max. speed	mm/s	300 (*1)	1000
Repeatability	mm	±0.01	±0.04
Ball screw lead	mm	5	21 or equiv.
Motor size	W	With 200 brake	100

Acceleration/deceleration time to the max. speed setting: 0.36 sec or greater

Timing belt drive

Z-axis: ball screw drive
Straight motor axis
Y-axis: timing belt drive
Motor: Right (R)/Left (L)

(*1) For the following stroke, max. speed varies

	Stroke (mm)	Max. speed (mm/s)
Z-axis	700	250
	800	200
	900 to 1000	150

Max. load capacity (kg) (*2)	Y-axis stroke								
	100 mm	200 mm	300 mm	400 mm	500 mm	600 mm	700 mm	800 mm	900 mm
	15.0	15.0	15.0	12.0	9.0	7.0	5.0	3.0	1.0

(*2) The load capacity when using regenerative discharge unit KCA-ABSU-2000.

Dimensions

R: Right-handed

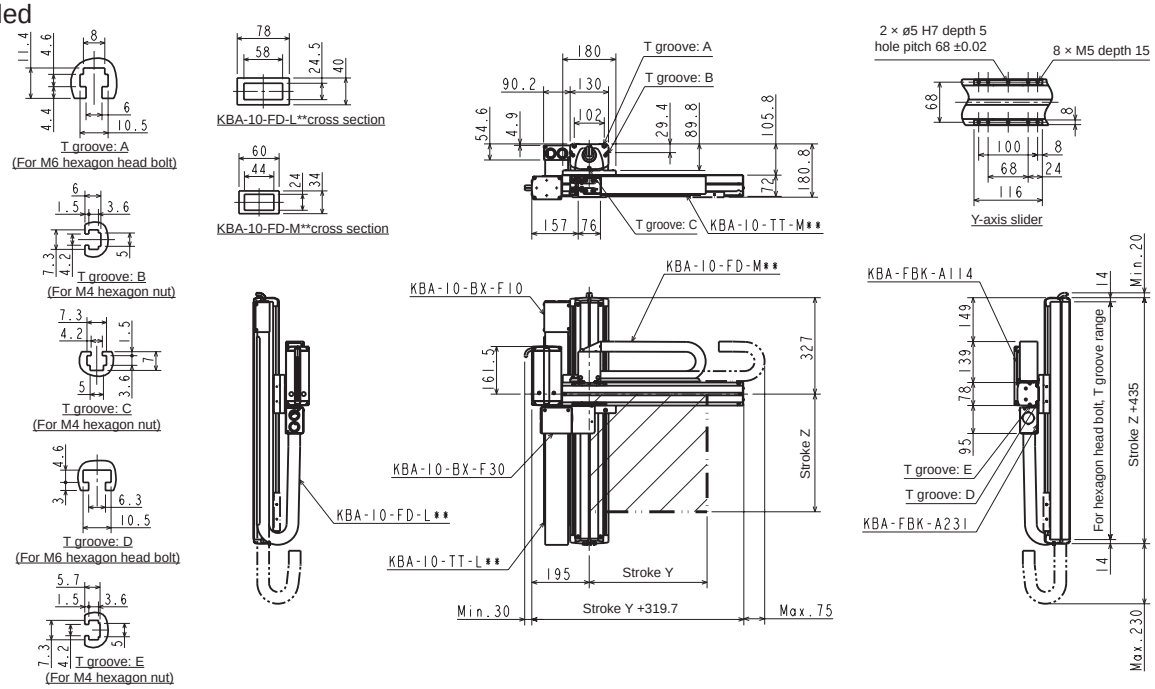

L: Left-handed

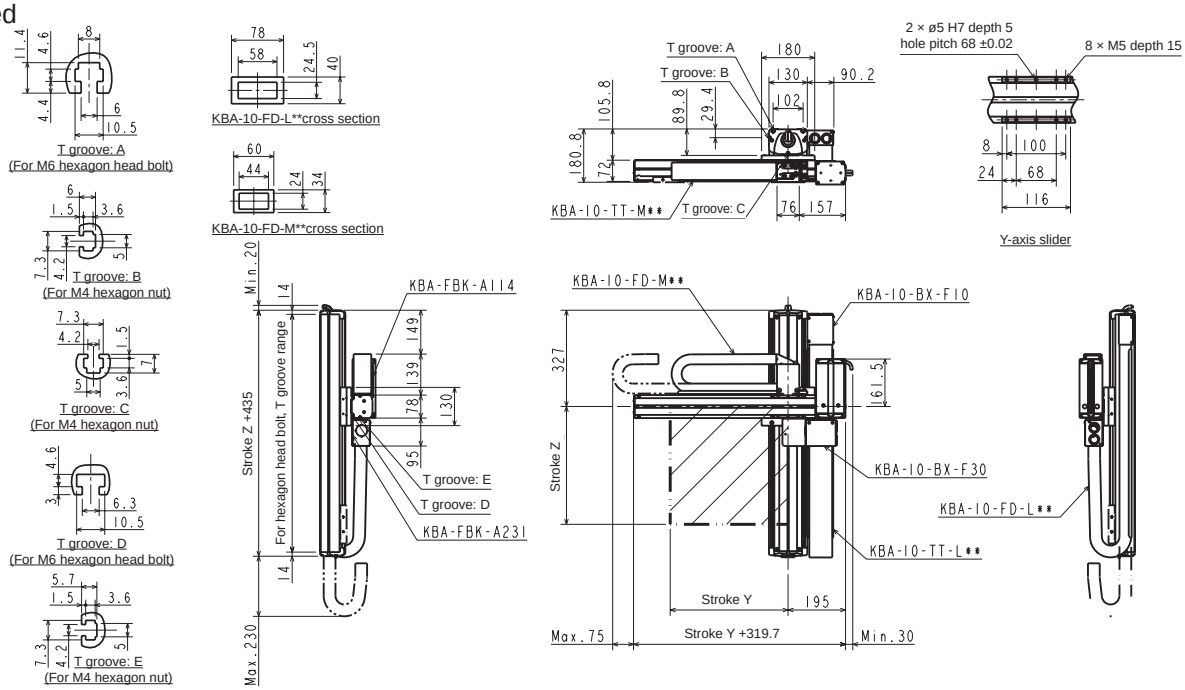

Orthogonal axis specifications: Z-Y flexible duct specifications

Specifications

Descriptions		Z-axis	Y-axis
Axis		KBX-30F-ST-M05B-□0	KBX-10F-B□-M21N-□0
Stroke 100 mm units	mm	100 to 1000	100 to 900
Max. speed	mm/s	300 (*1)	1000
Repeatability	mm	±0.01	±0.04
Ball screw lead	mm	5	21 or equiv.
Motor size	W	With 200 brake	200

Acceleration/deceleration time to the max. speed setting: 0.36 sec or greater

Timing belt drive

Z-axis: ball screw drive
Straight motor axis
Y-axis: timing belt drive
Motor: Right (R)/Left (L)

(*1) For the following stroke, max. speed varies

	Stroke (mm)	Max. speed (mm/s)
Z-axis	700	250
	800	200
	900 to 1000	150

Max. load capacity (kg) (*2)	Y-axis stroke								
	100 mm	200 mm	300 mm	400 mm	500 mm	600 mm	700 mm	800 mm	900 mm
	20.0	19.0	15.0	12.0	9.0	7.0	5.0	3.0	1.0

(*2) The load capacity when using regenerative discharge unit KCA-ABSU-2000.

Dimensions

R: Right-handed

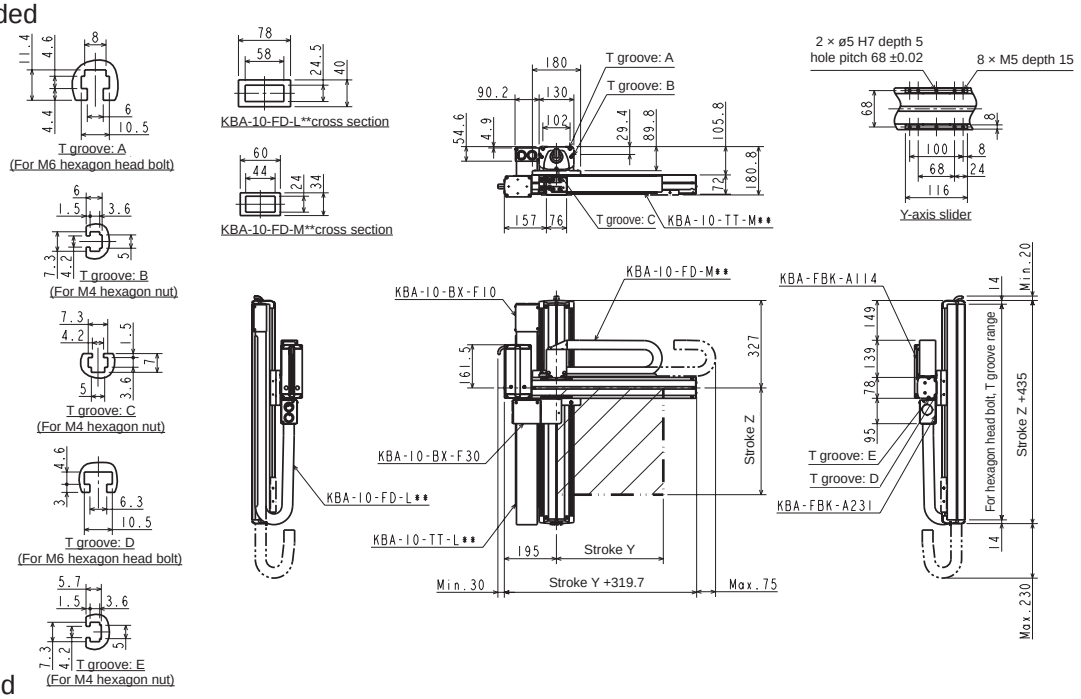

L: Left-handed

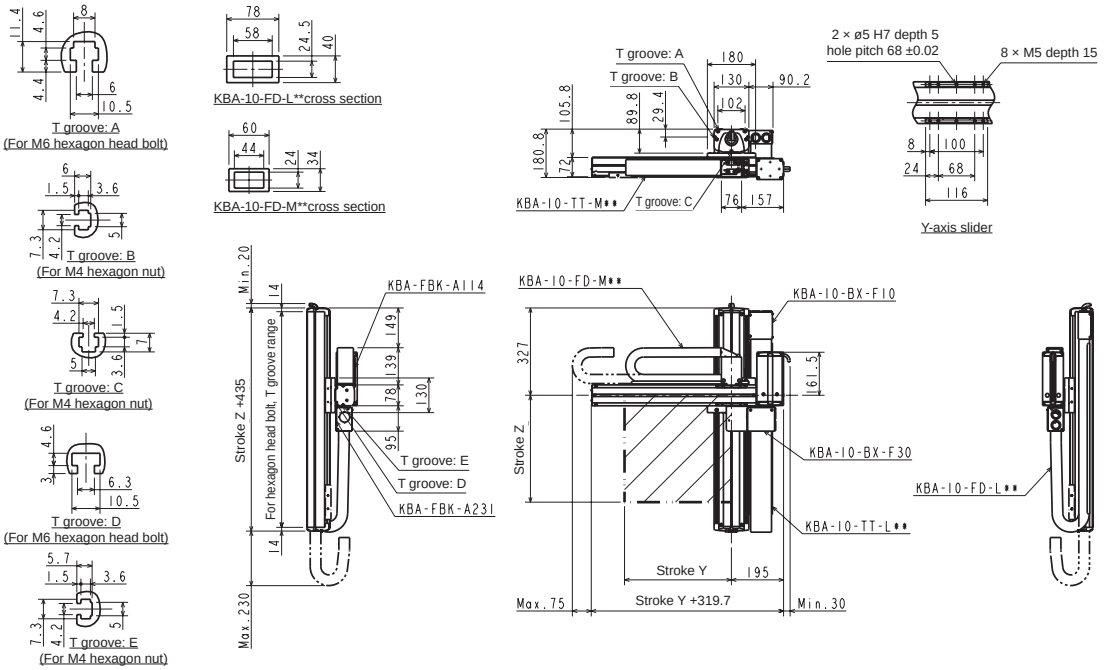

Orthogonal axis specifications: Z-Y flexible duct specifications

Specifications

Descriptions		Z-axis	Y-axis
Axis		KBX-50F-ST-M05B-□0	KBX-30E-B□-M21N-□0
Stroke 100 mm units	mm	200 to 1600	100 to 1000
Max. speed	mm/s	300 (*1)	1000
Repeatability	mm	±0.01	±0.04
Ball screw lead	mm	5	21 or equiv.
Motor size	W	With 200 brake	100

Acceleration/deceleration time to the max. speed setting: 0.36 sec or greater

Timing belt drive

Z-axis: ball screw drive
Straight motor axis
Y-axis: timing belt drive
Motor: Right (R)/Left (L)

(*1) For the following stroke, max. speed varies

	Stroke (mm)	Max. speed (mm/s)
Z-axis	700 to 800	280
	900 to 1000	250
	1100 to 1200	180
	1300	130
	1400	100
	1500	80
	1600	80

Max. load capacity (kg) (*2)	Y-axis stroke									
	100 mm	200 mm	300 mm	400 mm	500 mm	600 mm	700 mm	800 mm	900 mm	1000 mm
	15.0	15.0	15.0	15.0	15.0	15.0	15.0	14.0	11.0	7.0

(*2) The load capacity when using regenerative discharge unit KCA-ABSU-2000.

Dimensions

R: Right-handed

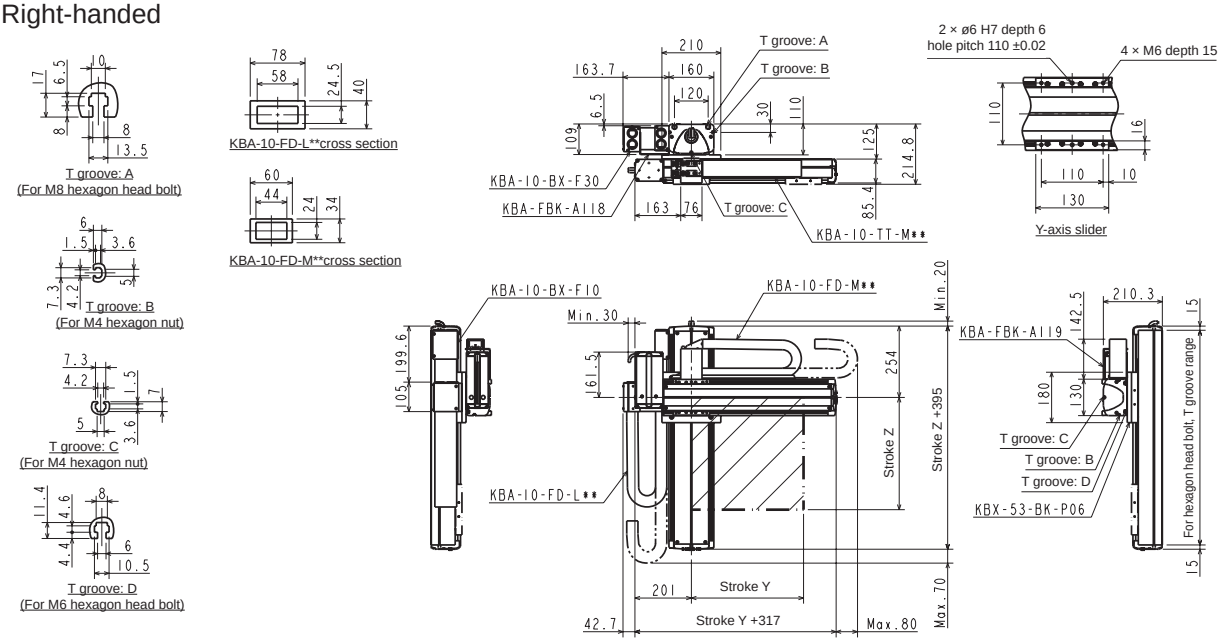

L: Left-handed

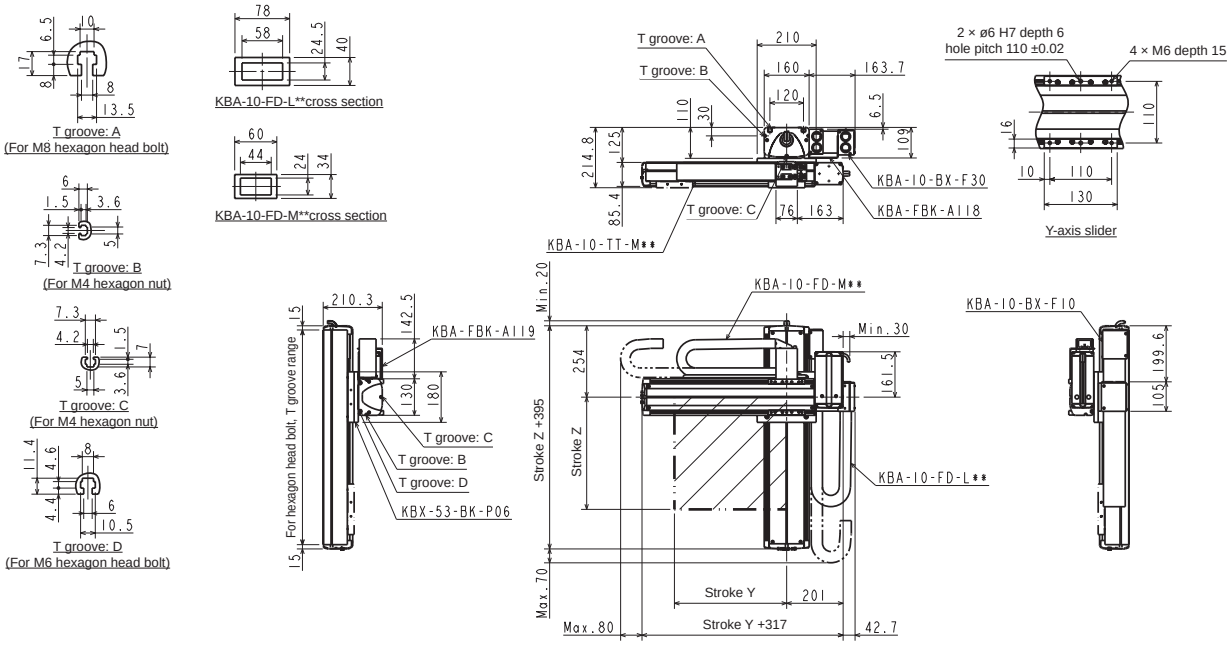

Orthogonal axis specifications: Z-Y flexible duct specifications

Specifications

Descriptions		Z-axis	Y-axis
Axis		KBX-50F-ST-M05B-□0	KBX-30F-B□-M21N-□0
Stroke 100 mm units	mm	200 to 1600	100 to 1000
Max. speed	mm/s	300 (*1)	1000
Repeatability	mm	±0.01	±0.04
Ball screw lead	mm	5	21 or equiv.
Motor size	W	With 200 brake	200

Acceleration/deceleration time to the max. speed setting: 0.36 sec or greater

Timing belt

Z-axis: ball screw drive
Straight motor axis
Y-axis: timing belt drive
Motor: Right (R)/Left (L)

(*1) For the following stroke, max. speed varies

	Stroke (mm)	Max. speed (mm/s)
Z-axis	700 to 800	280
	900 to 1000	250
	1100 to 1200	180
	1300	130
	1400	100
	1500	80
	1600	80

Max. load capacity (kg) (*2)	Y-axis stroke									
	100 mm	200 mm	300 mm	400 mm	500 mm	600 mm	700 mm	800 mm	900 mm	1000 mm
	27.0	26.0	25.0	24.0	23.0	22.0	18.0	14.0	11.0	7.0

(*2) The load capacity when using regenerative discharge unit KCA-ABSU-2000.

Dimensions

R: Right-handed

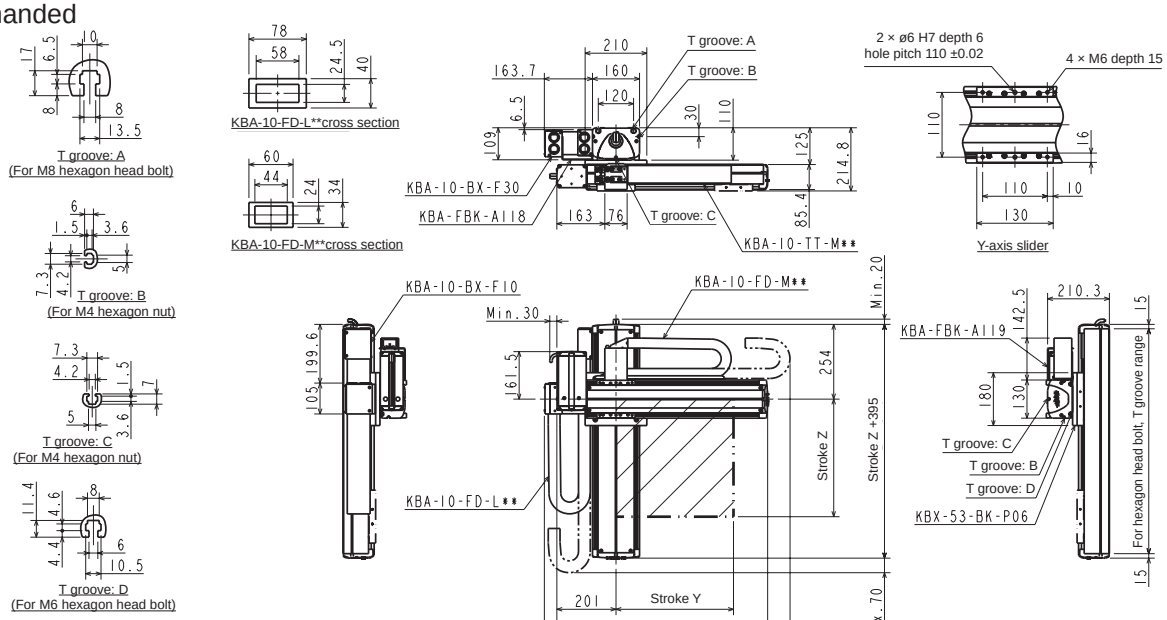

L: Left-handed

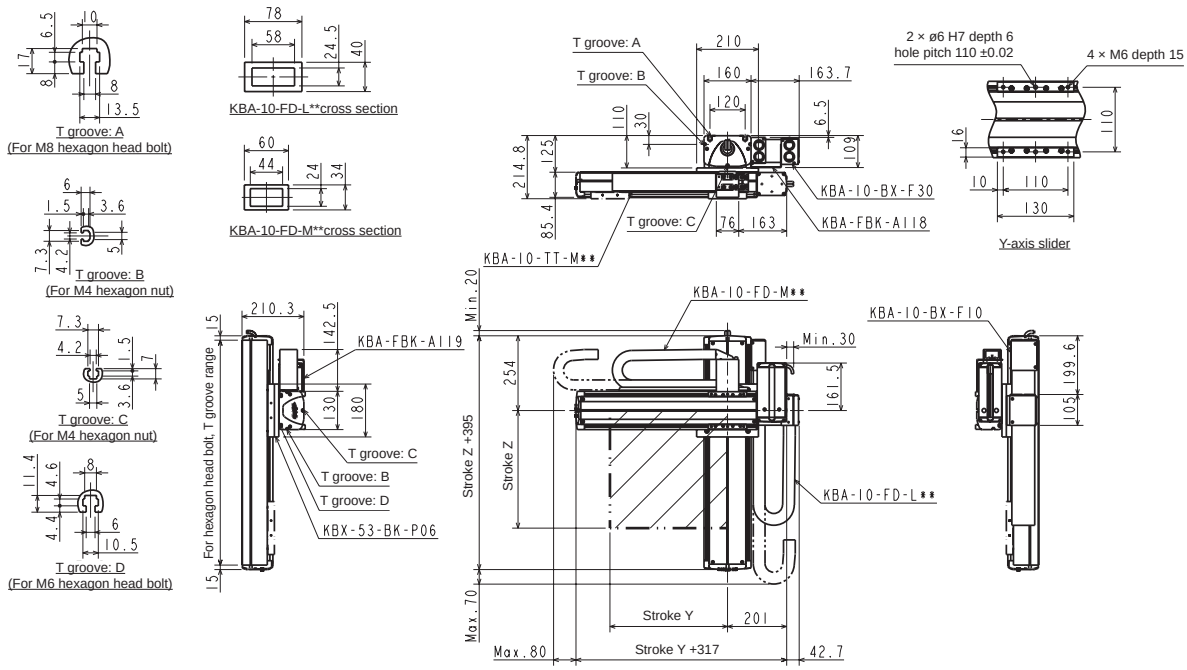

Orthogonal axis specifications: X-Y-Z flexible duct specifications

Specifications

Descriptions		X-axis	Y-axis	Z-axis
Axis		KBX-10E-ST-S20N-□5	KBX-T7D-ST-M12N-□□	KBX-T5D-ST-M06B-□□
Stroke X-axis 100 mm units Y, Z-axes 50 mm units	mm	150 to 1250	50 to 300	50 to 300
Max. speed	mm/s	1200 (*1)	800	400
Repeatability	mm	±0.01	±0.02	
Ball screw lead	mm	20	12	6
Motor size	W	100	50	With 50 brake

Acceleration/deceleration time to the max. speed setting: 0.36 sec or greater

Ball screw drive

X-axis: ball screw drive
Straight motor axis
Y-axis: ball screw drive
Straight motor axis
Z-axis: ball screw drive
Straight motor axis

(*1) For the following stroke, max. speed varies

	Stroke (mm)	Max. speed (mm/s)
X-axis	750	1000
	850	800
	950 to 1050	600
	1150 to 1250	400

Max. load capacity (kg)		Y-axis stroke					
		50 mm	100 mm	150 mm	200 mm	250 mm	300 mm
Z-axis stroke	50, 100 mm	3.0	3.0	2.5	2.5	0.7	0.7
	150, 200 mm	3.0	3.0	2.5	2.5	0.5	0.5
	250, 300 mm	3.0	3.0	2.5	2.5	0.3	0.3

Dimensions

R: Right-handed

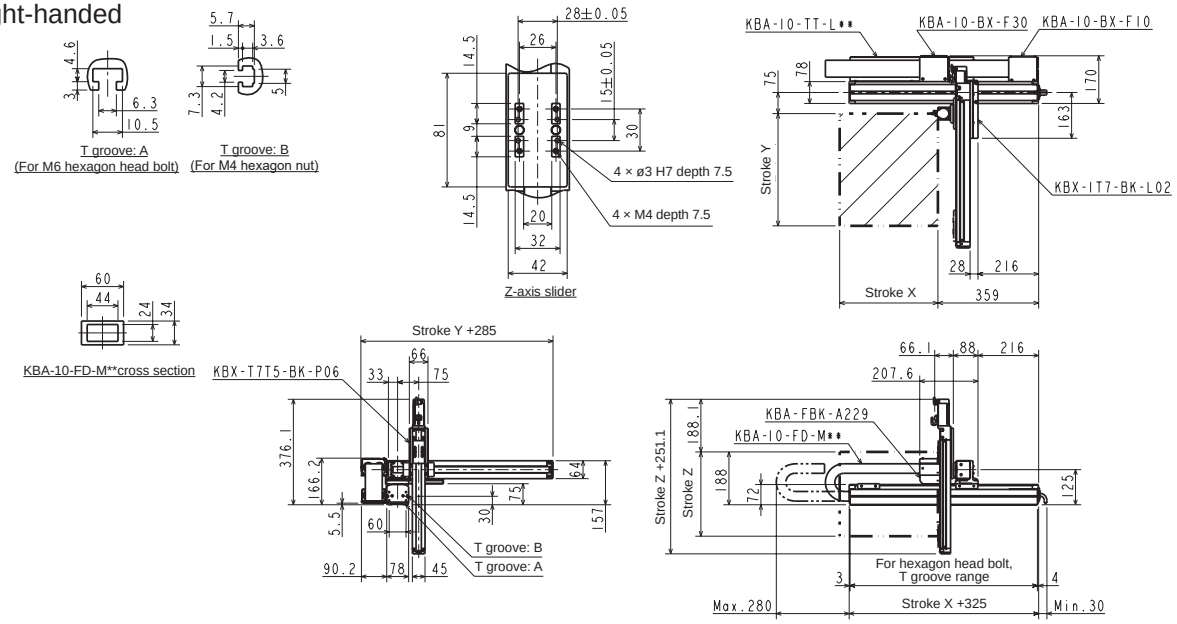

L: Left-handed

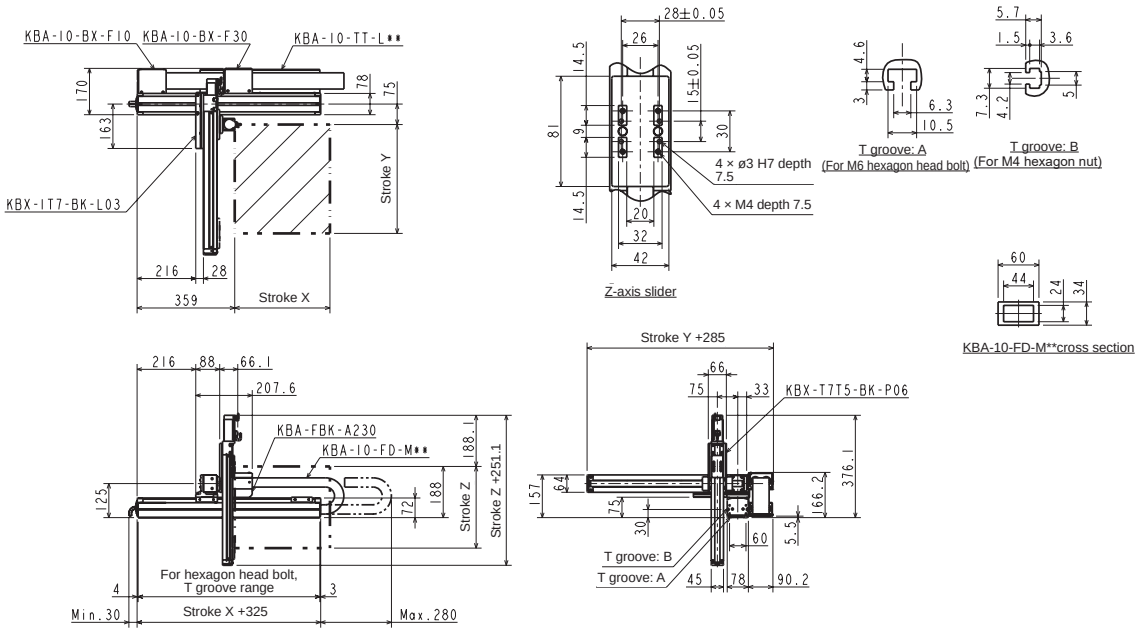

Orthogonal axis specifications: X-Y-Z flexible duct specifications

Specifications

Descriptions		X-axis	Y-axis	Z-axis
Axis		KBX-10E-U□-S20N-□5	KBX-T7D-ST-M12N-□□	KBX-T5D-ST-M06B-□□
Stroke X-axis 100 mm units Y, Z-axes 50 mm units	mm	150 to 1250	50 to 300	50 to 300
Max. speed	mm/s	1200 (*1)	800	400
Repeatability	mm	±0.01	±0.02	
Ball screw lead	mm	20	12	6
Motor size	W	100	50	With 50 brake

Acceleration/deceleration time to the max. speed setting: 0.36 sec or greater

Ball screw drive

X-axis: ball screw drive
Motor: Left (R)/Right (L)
Y-axis: ball screw drive
Straight motor axis
Z-axis: ball screw drive
Straight motor axis
(*1) For the following stroke, max. speed varies

	Stroke (mm)	Max. speed mm/s)
X-axis	750	1000
	850	800
	950 to 1050	600
	1150 to 1250	400

Max. load capacity (kg)		Y-axis stroke					
		50 mm	100 mm	150 mm	200 mm	250 mm	300 mm
Z-axis stroke	50, 100 mm	3.0	3.0	2.5	2.5	0.7	0.7
	150, 200 mm	3.0	3.0	2.5	2.5	0.5	0.5
	250, 300 mm	3.0	3.0	2.5	2.5	0.3	0.3

Dimensions

R: Right-handed

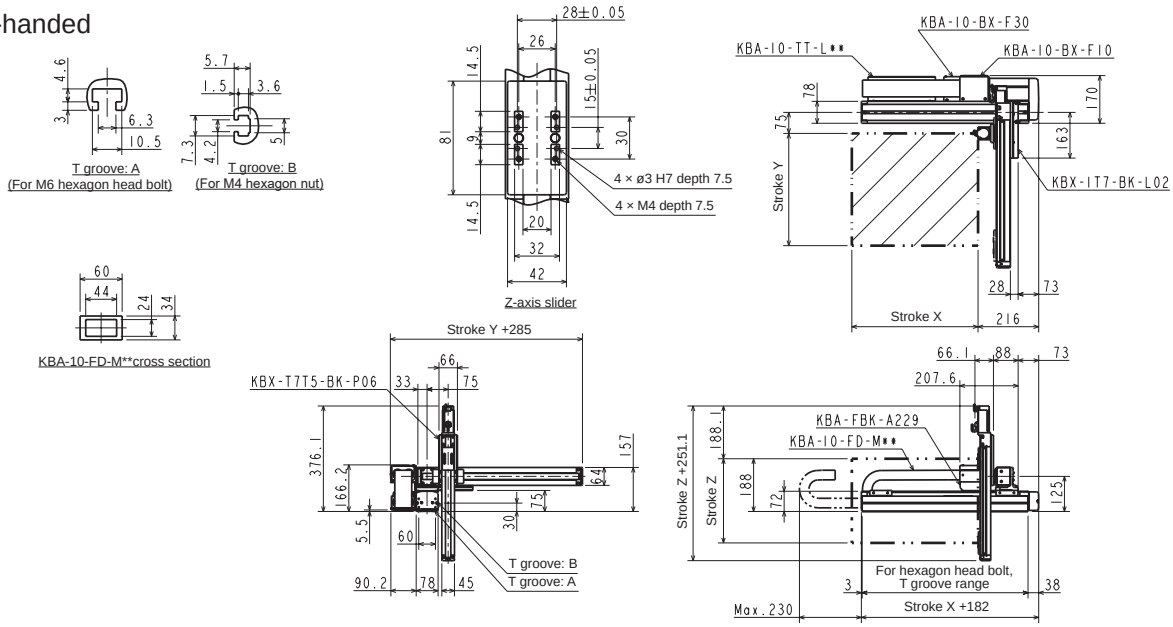

L: Left-handed

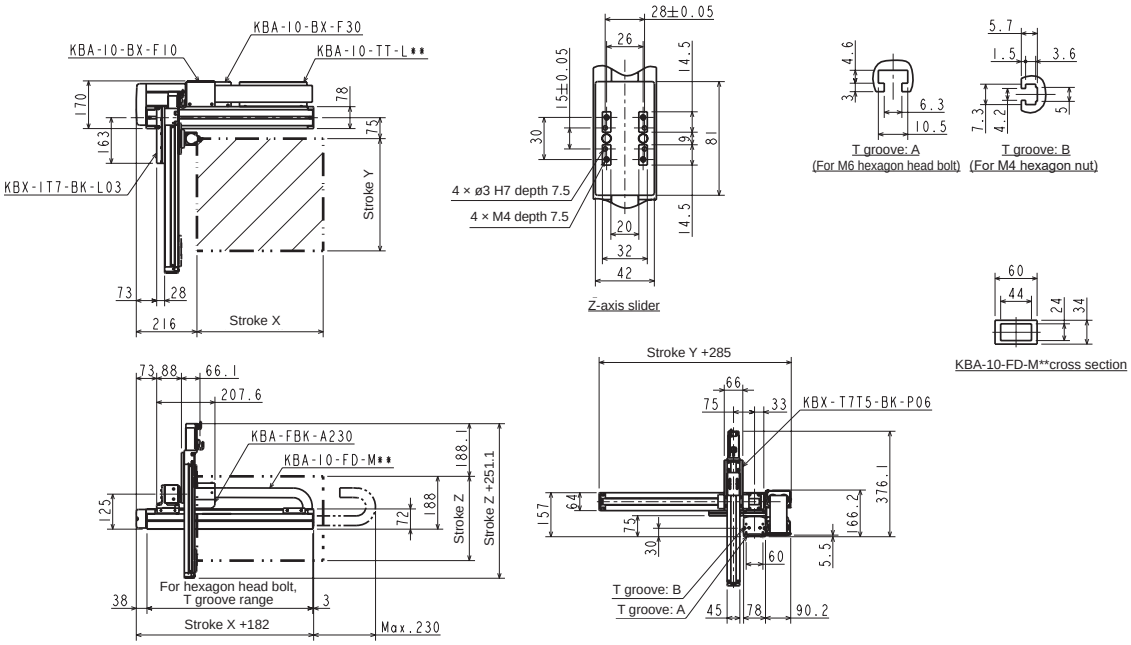

Orthogonal axis specifications: X-Y-Z flexible duct specifications

Specifications

Descriptions		X-axis	Y-axis	Z-axis
Axis		KBX-10E-ST-M20N-□0	KBX-10E-ST-S20N-□5	KBX-T7D-ST-M06B-□□
Stroke X, Y-axes 100 mm units Z-axis 50 mm units	mm	100 to 1200	150 to 450	50 to 300
Max. speed	mm/s	1200 (*1)	1200	400
Repeatability	mm	±0.01	±0.01	±0.02
Ball screw lead	mm	20	20	6
Motor size	W	100	100	With 50 brake

Acceleration/deceleration time to the max. speed setting: 0.36 sec or greater

Ball screw drive

X-axis: ball screw drive
Straight motor axis
Y-axis: ball screw drive
Straight motor axis
Z-axis: ball screw drive
Straight motor axis

(*1) For the following stroke, max. speed varies

	Stroke (mm)	Max. speed (mm/s)
X-axis	700	1000
	800	800
	900 to 1000	600
	1100 to 1200	400

Max. load capacity (kg)		Y-axis stroke			
		150 mm	250 mm	350 mm	450 mm
Z-axis stroke	50, 100 mm	4.0	3.5	2.5	1
	150, 200 mm	4.0	2.5	2	0.6
	250, 300 mm	3.5	2.5	1.5	0.2

Dimensions

R: Right-handed

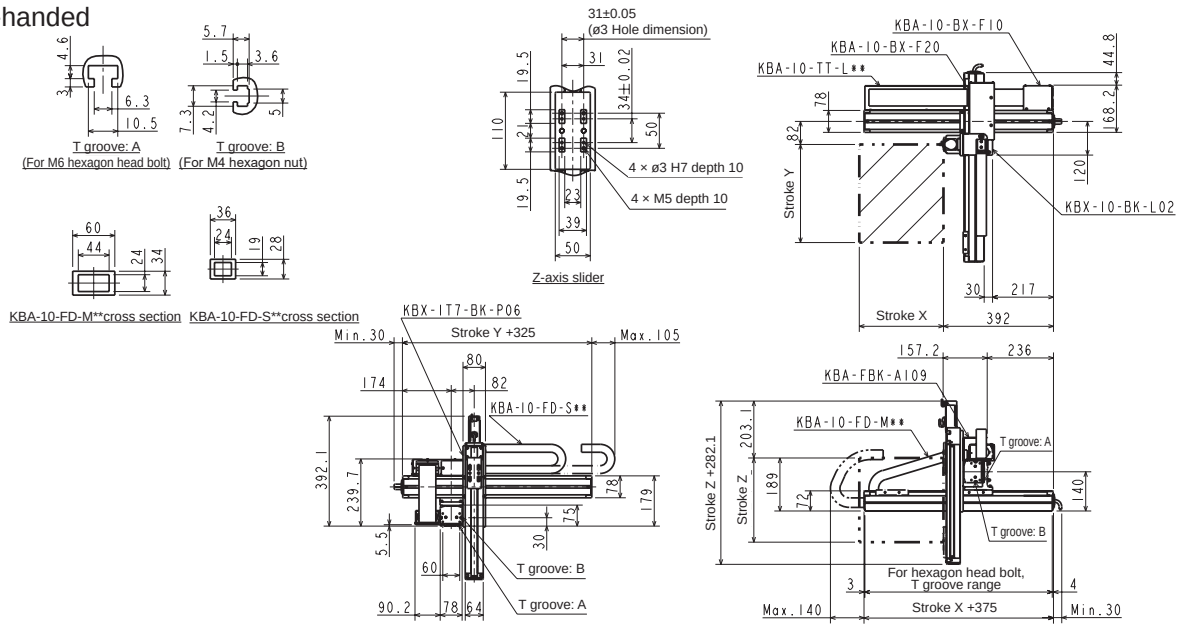

L: Left-handed

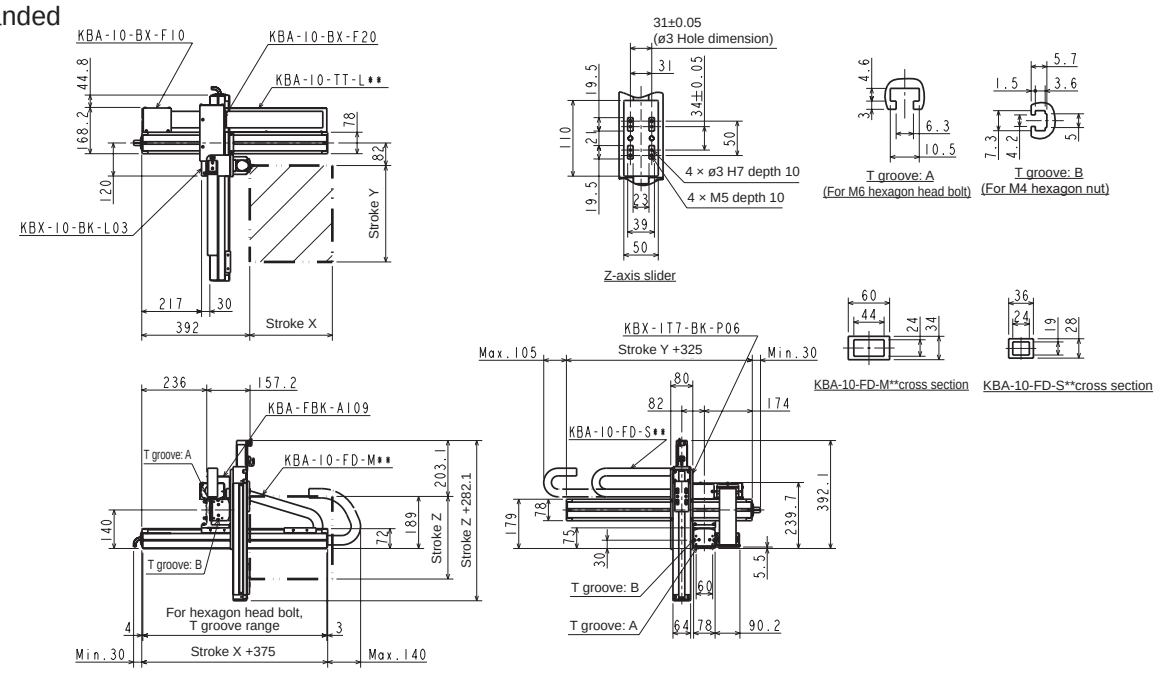

Orthogonal axis specifications: X-Y-Z flexible duct specifications

Specifications

Descriptions		X-axis	Y-axis	Z-axis
Axis		KBX-10E-U□-M20N-□0	KBX-10E-U□-S20N-□5	KBX-T7D-ST-M06B-□□
Stroke X, Y-axes 100 mm units Z-axis 50 mm units	mm	100 to 1200	150 to 450	50 to 300
Max. speed	mm/s	1200 (*1)	1200	400
Repeatability	mm	±0.01	±0.01	±0.02
Ball screw lead	mm	20	20	6
Motor size	W	100	100	With 50 brake

Acceleration/deceleration time to the max. speed setting: 0.36 sec or greater

Ball screw drive

X-axis: ball screw drive
Motor: Left (R)/Right (L)
Y-axis: ball screw drive
Motor: Right (R)/Left (L)
Z-axis: ball screw drive
Straight motor axis
(*1) For the following stroke, max. speed varies

	Stroke (mm)	Max. speed (mm/s)
X-axis	700	1000
	800	800
	900 to 1000	600
	1100 to 1200	400

Max. load capacity (kg)		Y-axis stroke			
		150 mm	250 mm	350 mm	450 mm
Z-axis stroke	50, 100 mm	4.0	3.5	2.5	1
	150, 200 mm	4.0	2.5	2	0.6
	250, 300 mm	3.5	2.5	1.5	0.2

Dimensions

R: Right-handed

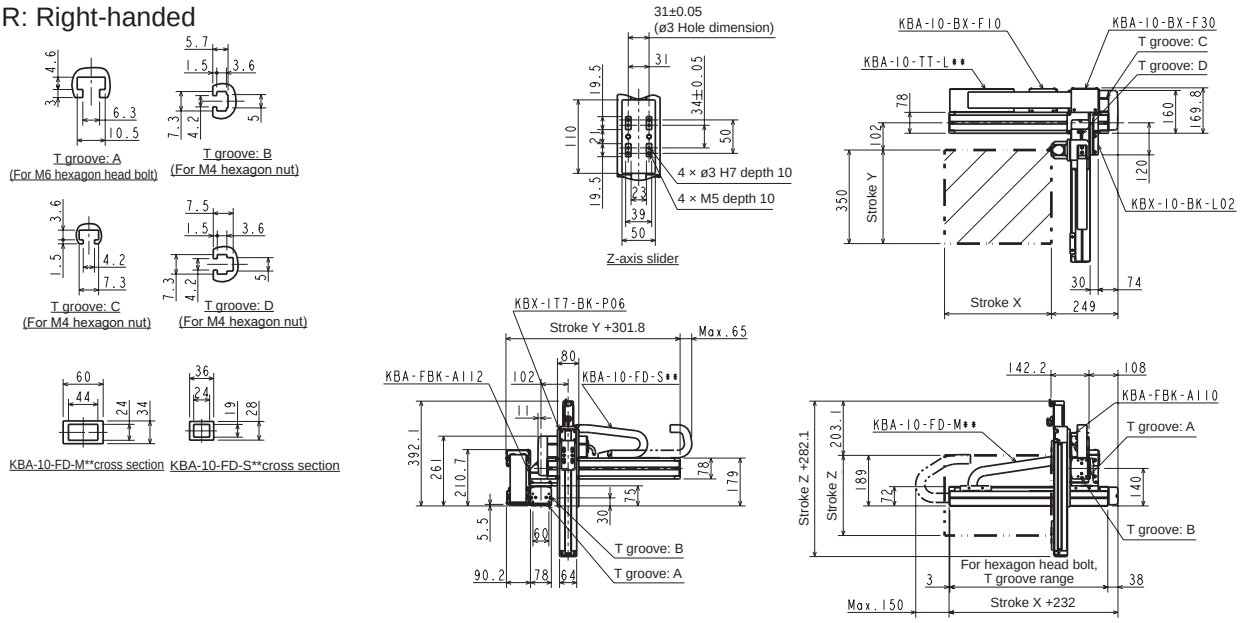

L: Left-handed

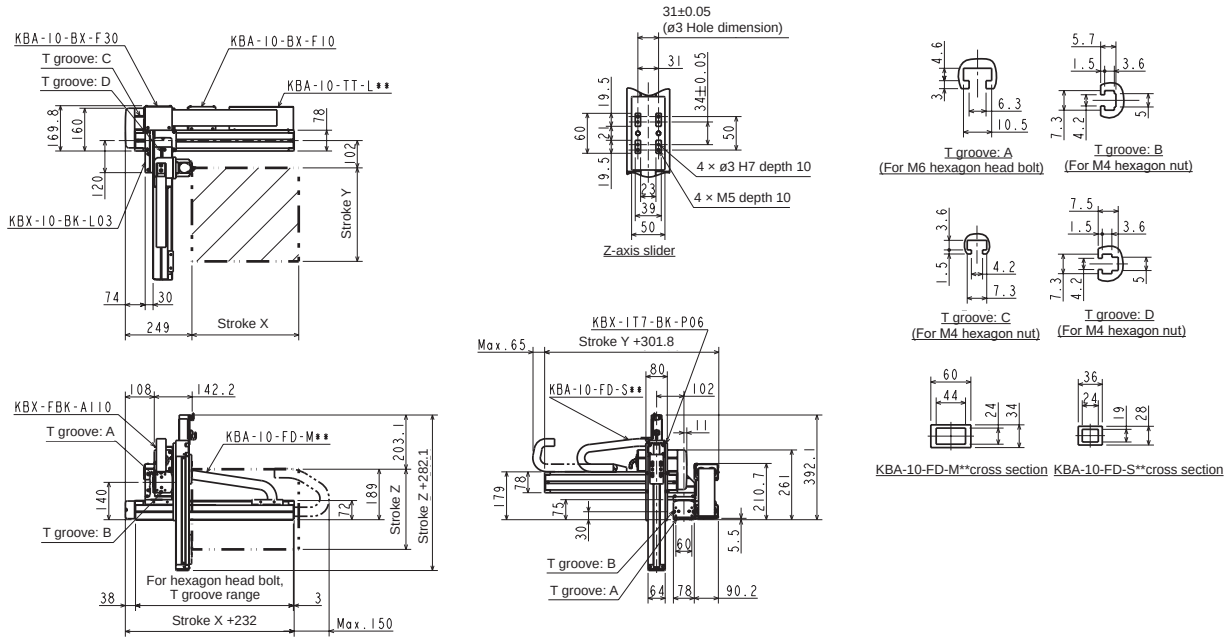

Orthogonal axis specifications: X-Y-Z flexible duct specifications

Specifications

Descriptions		X-axis	Y-axis	Z-axis
Axis		KBX-30F-ST-M20N-□0	KBX-10E-ST-S20N-□5	KBX-T7D-ST-M06B-□□
Stroke X, Y-axes 100 mm units Z-axis 50 mm units	mm	100 to 1200	150 to 750	50 to 300
Max. speed	mm/s	1200 (*1)	1200 (*1)	400
Repeatability	mm	±0.01	±0.01	±0.02
Ball screw lead	mm	20	20	6
Motor size	W	200	100	With 50 brake

Acceleration/deceleration time to the max. speed setting: 0.36 sec or greater

Ball screw drive

X-axis: ball screw drive
Straight motor axis
Y-axis: ball screw drive
Straight motor axis
Z-axis: ball screw drive
Straight motor axis

(*1) For the following stroke, max. speed varies

	Stroke (mm)	Max. speed (mm/s)
X-axis	700	1000
	800	800
	900 to 1000	600
	1100 to 1200	400
Y-axis	750	1000

Max. load capacity (kg)		Y-axis stroke						
		150 mm	250 mm	350 mm	450 mm	550 mm	650 mm	750 mm
Z-axis stroke	50, 100 mm	4.0	4.0	4.0	4.0	3.9	3.4	1.6
	150, 200 mm	4.0	4.0	4.0	4.0	3.7	3.1	1.3
	250, 300 mm	4.0	4.0	4.0	4.0	3.5	2.8	1

Dimensions

R: Right-handed

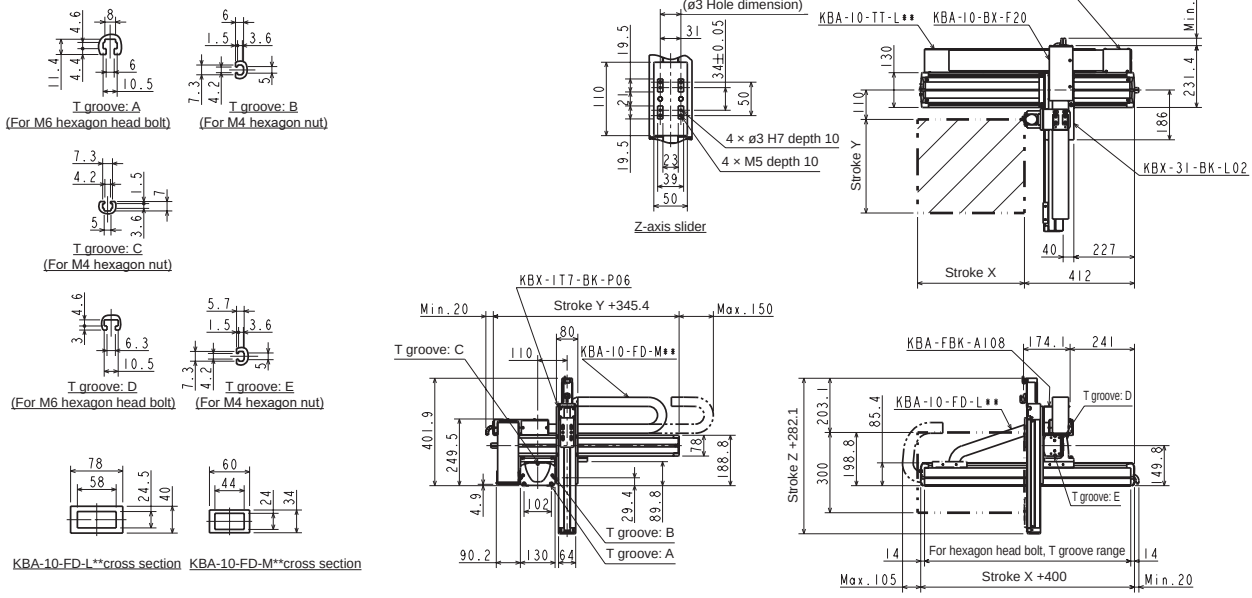

L: Left-handed

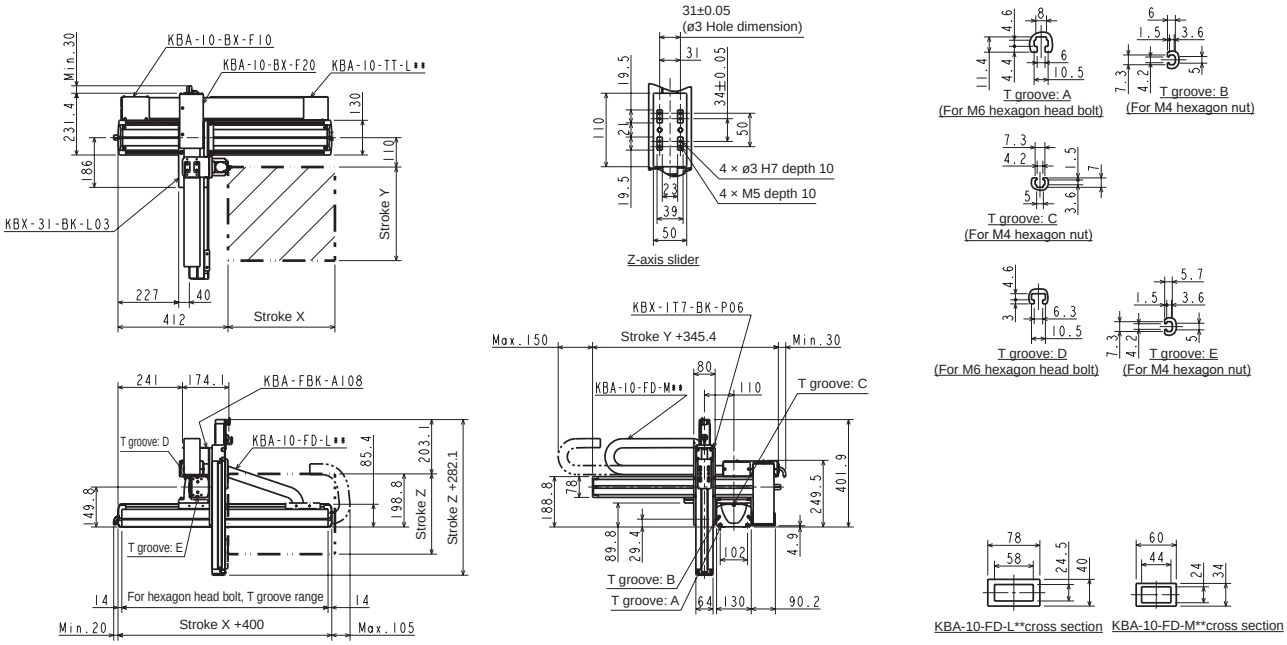

Orthogonal axis specifications: X-Y-Z flexible duct specifications

Specifications

Descriptions		X-axis	Y-axis	Z-axis
Axis		KBX-30F-U□-M20N-□0	KBX-10E-U□-S20N-□5	KBX-T7D-ST-M06B-□□
Stroke X, Y-axes 100 mm units Z-axis 50 mm units	mm	100 to 1200	150 to 750	50 to 300
Max. speed	mm/s	1200 (*1)	1200 (*1)	400
Repeatability	mm	±0.01	±0.01	±0.02
Ball screw lead	mm	20	20	6
Motor size	W	200	100	With 50 brake

Acceleration/deceleration time to the max. speed setting: 0.36 sec or greater

Ball screw drive

X-axis: ball screw drive
Motor: Left (R)/Right (L)
Y-axis: ball screw drive
Motor: Right (R)/Left (L)
Z-axis: ball screw drive
Straight motor axis
(*1) For the following stroke, max. speed varies

	Stroke (mm)	Max. speed (mm/s)
X-axis	700	1000
	800	800
	900 to 1000	600
	1100 to 1200	400
Y-axis	750	1000

Max. load capacity (kg)		Y-axis stroke						
		150 mm	250 mm	350 mm	450 mm	550 mm	650 mm	750 mm
Z-axis stroke	50, 100 mm	4.0	4.0	4.0	4.0	3.9	3.4	1.6
	150, 200 mm	4.0	4.0	4.0	4.0	3.7	3.1	1.3
	250, 300 mm	4.0	4.0	4.0	4.0	3.5	2.8	1

Dimensions

R: Right-handed

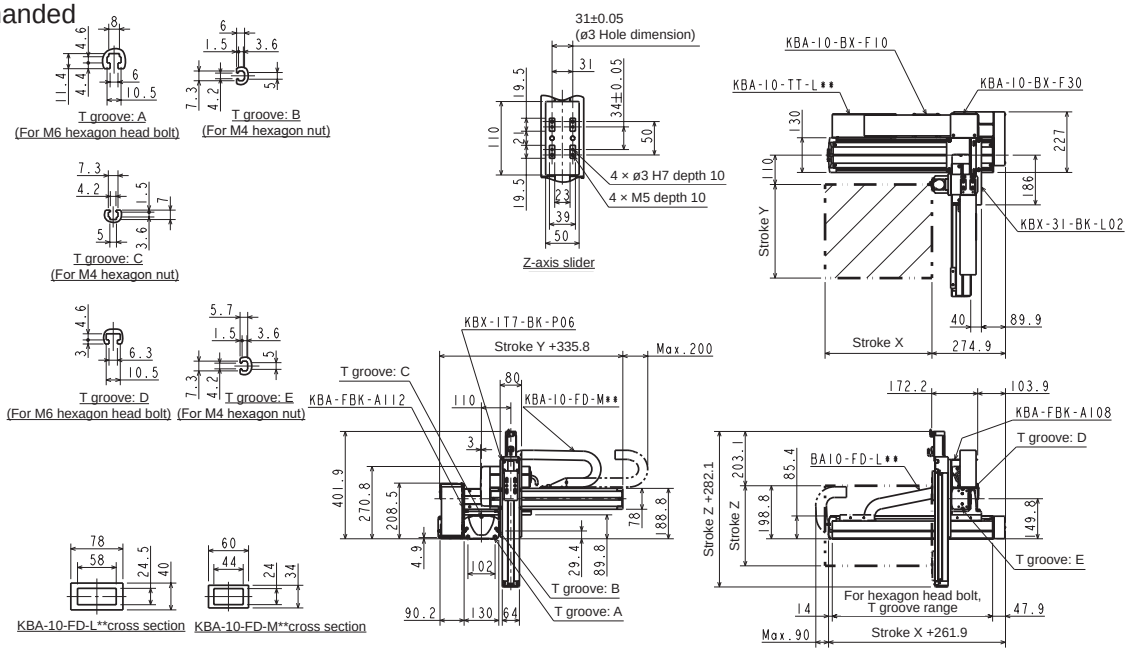

L: Left-handed

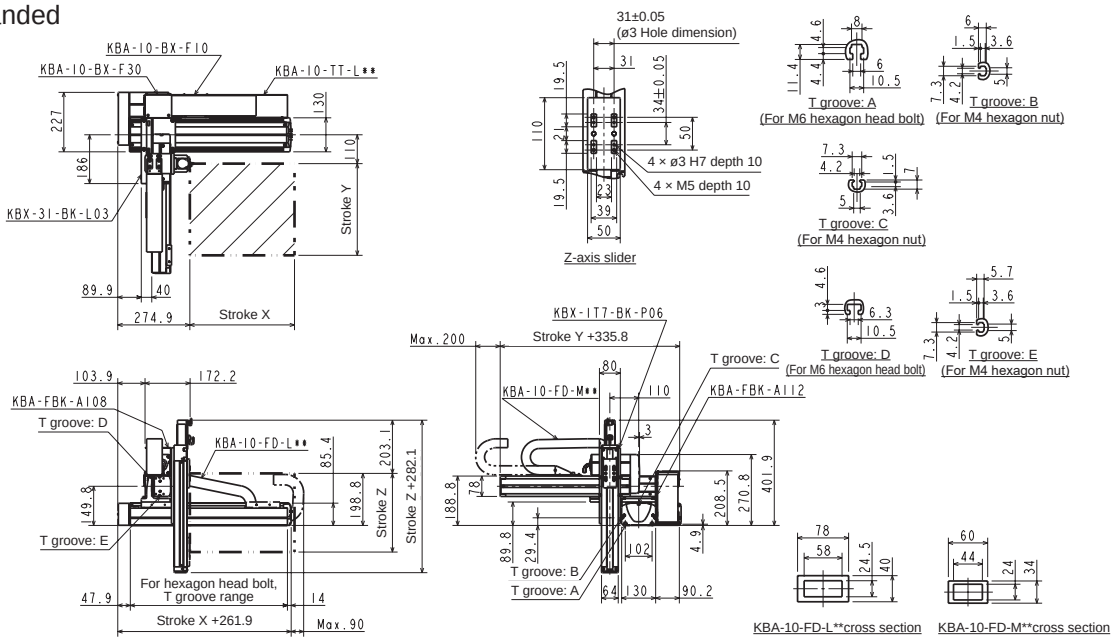

Orthogonal axis specifications: X-Y-Z flexible duct specifications

Specifications

Descriptions		X-axis	Y-axis	Z-axis
Axis		KBX-30E-ST-M20N-□5	KBX-10E-ST-M20N-□0	KBX-10E-U□-S10B-□5
Stroke 100 mm units	mm	150 to 1250	100 to 500	150 to 350
Max. speed	mm/s	1200 (*1)	1200	600
Repeatability	mm	±0.01		
Ball screw lead	mm	20	20	10
Motor size	W	100	100	With 100 brake

Acceleration/deceleration time to the max. speed setting: 0.48 sec or greater

Ball screw drive

X-axis: ball screw drive
Straight motor axis
Y-axis: ball screw drive
Straight motor axis
Z-axis: ball screw drive
Motor: Left (R)/Right (L)

(*1) For the following stroke, max. speed varies

	Stroke (mm)	Max. speed (mm/s)
X-axis	750	1000
	850	800
	950 to 1050	600
	1150 to 1250	400

Max. load capacity (kg)		Y-axis stroke				
		100 mm	200 mm	300 mm	400 mm	500 mm
Z-axis stroke	150 mm	7.0	6.0	5.0	4.0	2.0
	250 mm	6.0	5.0	4.0	4.0	2.0
	350 mm	5.0	5.0	3.0	3.0	1.0

Dimensions

R: Right-handed

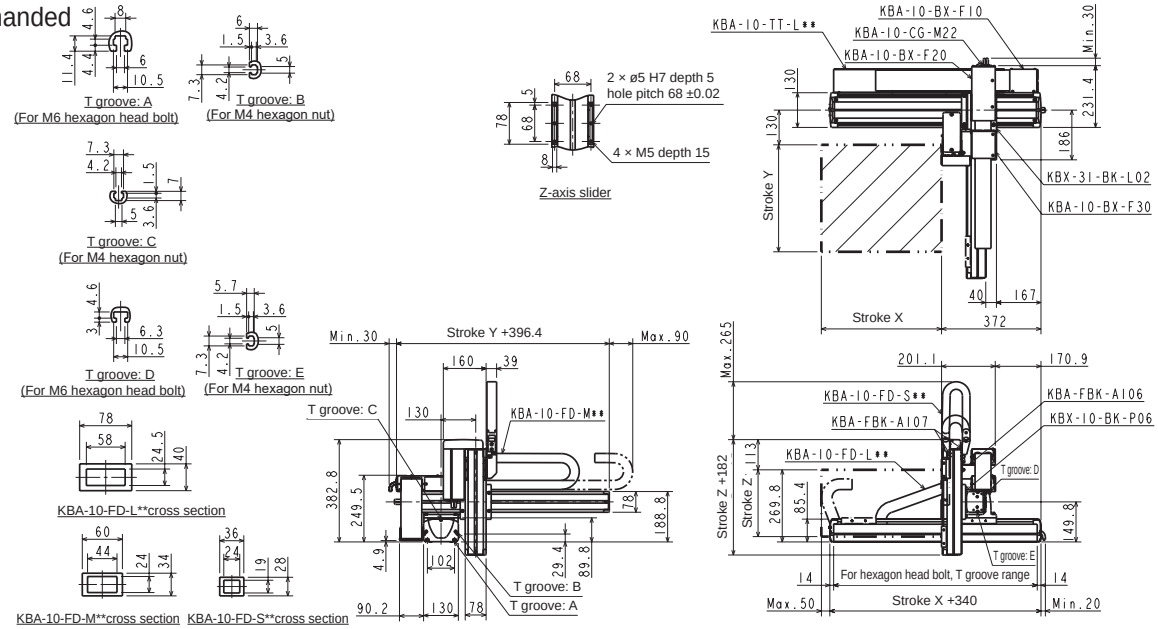

L: Left-handed

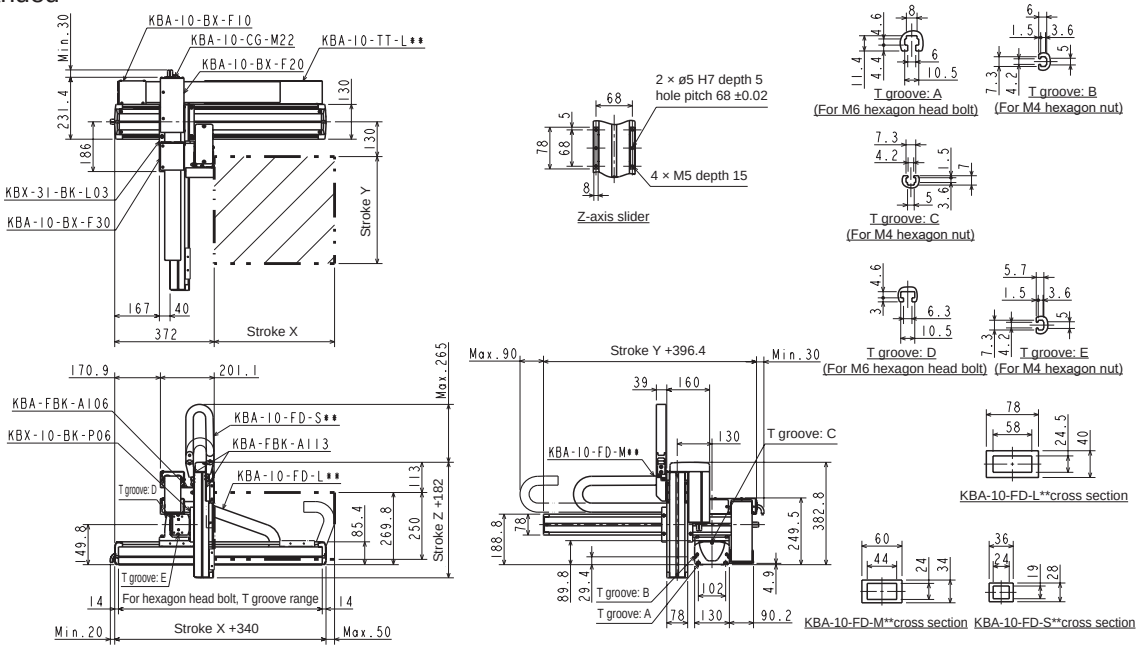

Orthogonal axis specifications: X-Y-Z flexible duct specifications

Specifications

Descriptions		X-axis	Y-axis	Z-axis
Axis		KBX-30E-U□-M20N-□0	KBX-10E-U□-M20N-□0	KBX-10E-U□-S10B-□5
Stroke 100 mm units	mm	100 to 1200	100 to 500	150 to 350
Max. speed	mm/s	1200 (*1)	1200	600
Repeatability	mm	±0.01		
Ball screw lead	mm	20	20	10
Motor size	W	100	100	With 100 brake

Acceleration/deceleration time to the max. speed setting: 0.48 sec or greater

Ball screw drive

X-axis: ball screw drive
Motor: Left (R)/Right (L)
Y-axis: ball screw drive
Motor: Right (R)/Left (L)
Z-axis: ball screw drive
Motor: Left (R)/Right (L)

(*1) For the following stroke, max. speed varies

	Stroke (mm)	Max. speed (mm/s)
X-axis	700	1000
	800	800
	900 to 1000	600
	1100 to 1200	400

Max. load capacity (kg)		Y-axis stroke				
		100 mm	200 mm	300 mm	400 mm	500 mm
Z-axis stroke	150 mm	7.0	6.0	5.0	4.0	2.0
	250 mm	6.0	5.0	4.0	4.0	2.0
	350 mm	5.0	5.0	3.0	3.0	1.0

Dimensions

R: Right-handed

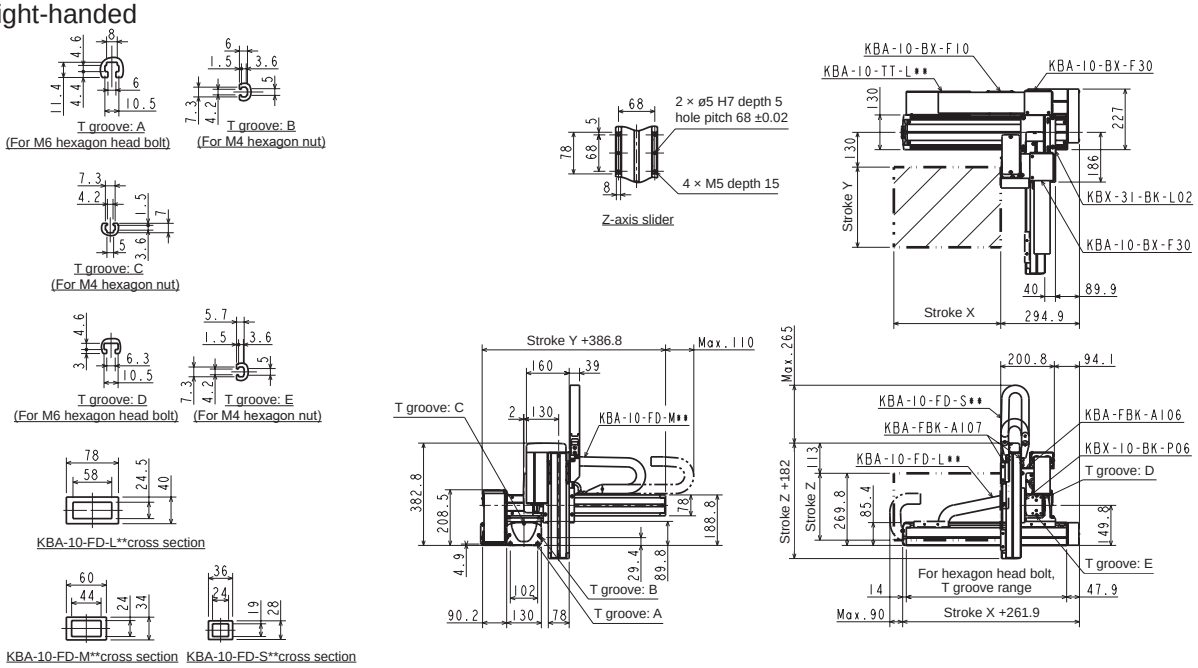

L: Left-handed

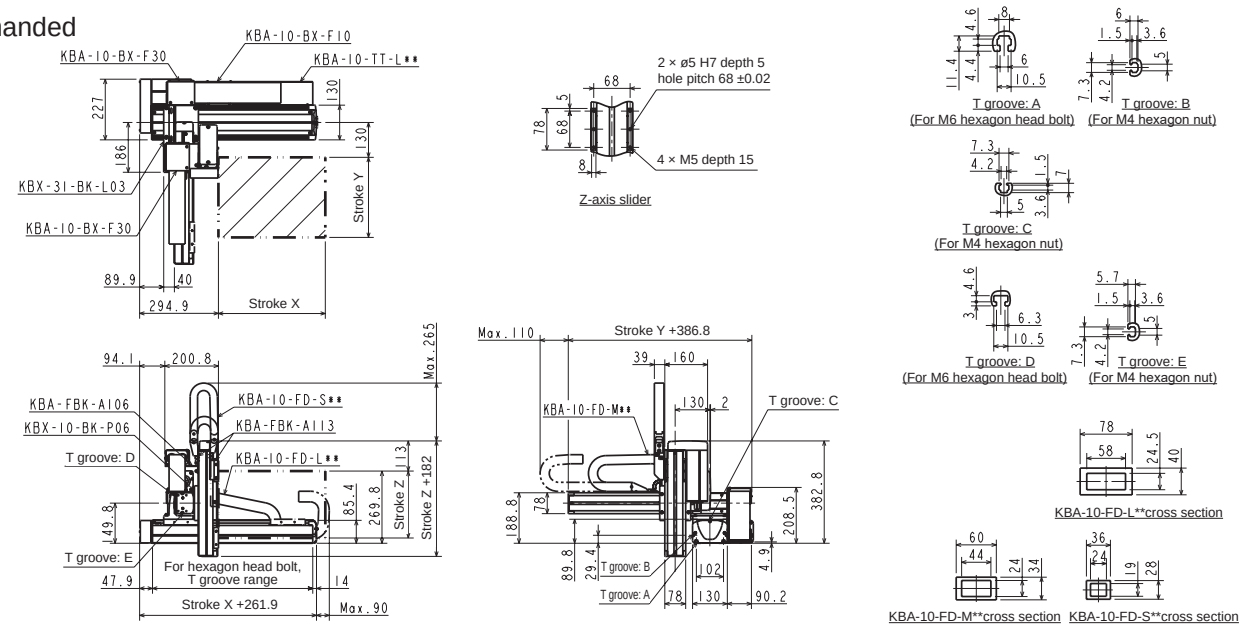

Orthogonal axis specifications: X-Y-Z flexible duct specifications

Specifications

Descriptions		X-axis	Y-axis	Z-axis
Axis		KBX-30F-ST-M20N-□0	KBX-10E-ST-M20N-□0	KBX-10E-U□-S10B-□5
Stroke 100 units	mm	100 to 1200	100 to 500	150 to 350
Max. speed	mm/s	1200 (*1)	1200	600
Repeatability	mm	±0.01		
Ball screw lead	mm	20	20	10
Motor size	W	200	100	With 100 brake

Acceleration/deceleration time to the max. speed setting: 0.36 sec or greater

Ball screw drive

X-axis: ball screw drive
Straight motor axis
Y-axis: ball screw drive
Straight motor axis
Z-axis: ball screw drive
Motor: Left (R)/Right (L)

(*1) For the following stroke, max. speed varies

	Stroke (mm)	Max. speed (mm/s)
X-axis	700	1000
	800	800
	900 to 1000	600
	1100 to 1200	400

Max. load capacity (kg)		Y-axis stroke				
		100 mm	200 mm	300 mm	400 mm	500 mm
Z-axis stroke	150 mm	7.0	7.0	7.0	4.0	2.0
	250 mm	7.0	7.0	6.0	4.0	1.0
	350 mm	6.0	6.0	6.0	3.0	1.0

Dimensions

R: Right-handed

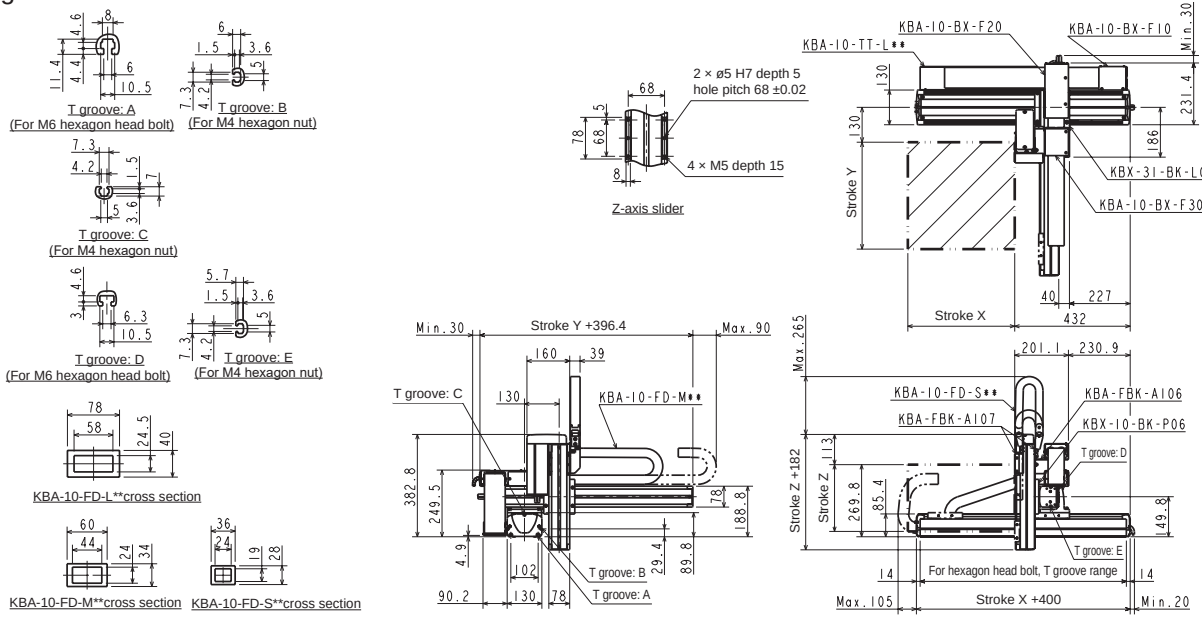

L: Left-handed

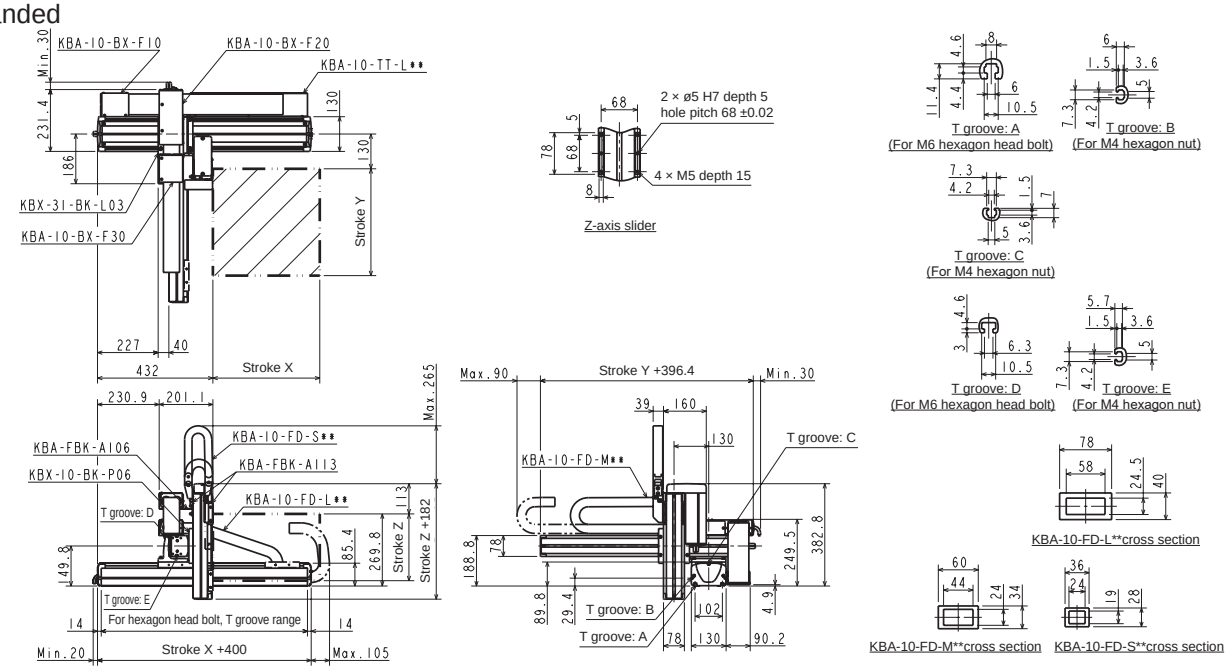

Orthogonal axis specifications: X-Y-Z flexible duct specifications

Specifications

Descriptions		X-axis	Y-axis	Z-axis
Axis		KBX-30F-U□-M20N-□0	KBX-10E-U□-M20N-□0	KBX-10E-U□-S10B-□5
Stroke 100 mm units	mm	100 to 1200	100 to 500	150 to 350
Max. speed	mm/s	1200 (*1)	1200	600
Repeatability	mm	±0.01		
Ball screw lead	mm	20	20	10
Motor size	W	200	100	With 100 brake

Acceleration/deceleration time to the max. speed setting: 0.48 sec or greater

Ball screw drive

X-axis: ball screw drive
Motor: Left (R)/Right (L)
Y-axis: ball screw drive
Motor: Right (R)/Left (L)
Z-axis: ball screw drive
Motor: Left (R)/Right (L)

(*1) For the following stroke, max. speed varies

	Stroke (mm)	Max. speed (mm/s)
X-axis	700	1000
	800	800
	900 to 1000	600
	1100 to 1200	400

Max. load capacity (kg)		Y-axis stroke				
		100 mm	200 mm	300 mm	400 mm	500 mm
Z-axis stroke	150 mm	7.0	7.0	7.0	4.0	2.0
	250 mm	7.0	7.0	6.0	4.0	1.0
	350 mm	6.0	6.0	6.0	3.0	1.0

Dimensions

R: Right-handed

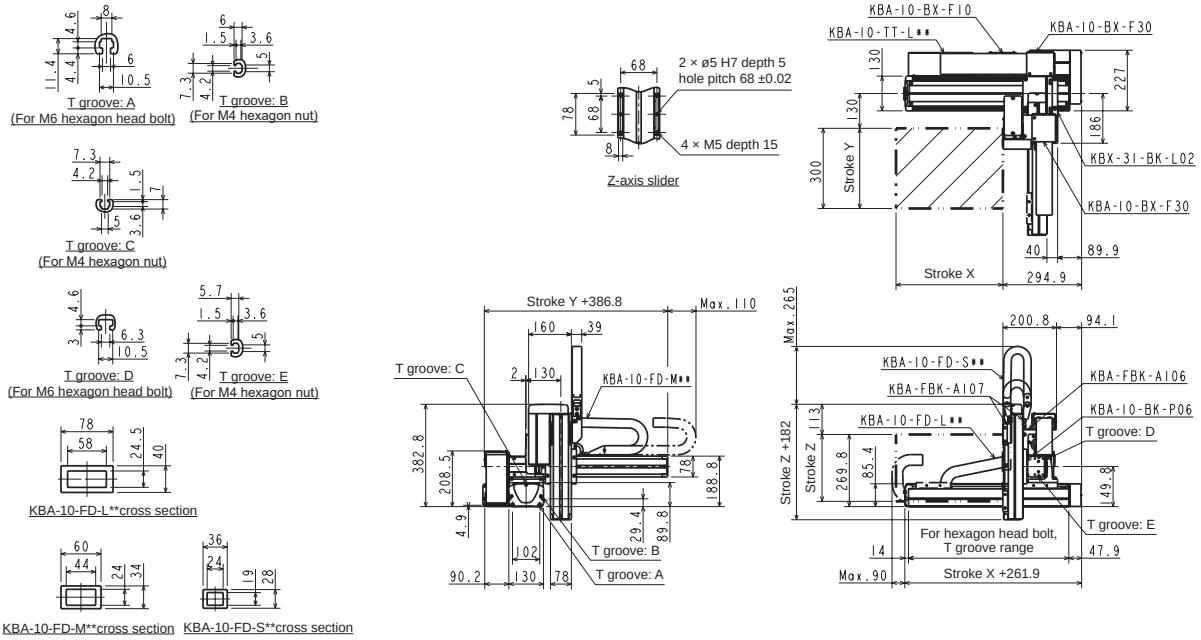

L: Left-handed

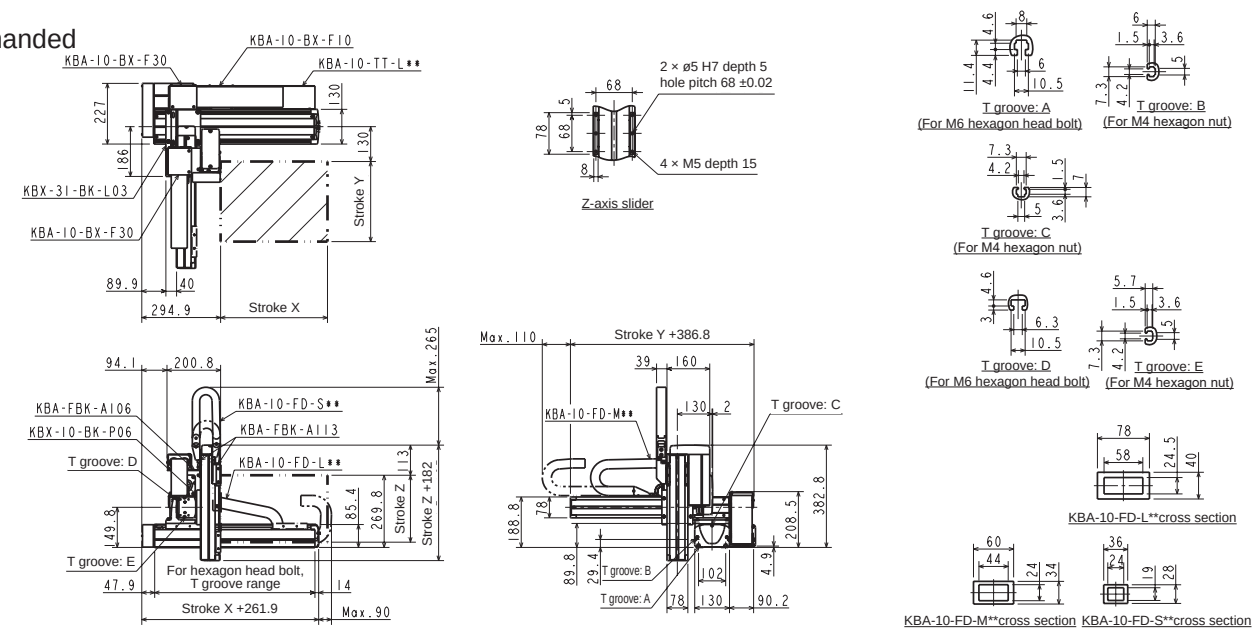

Orthogonal axis specifications: X-Y-Z flexible duct specifications

Specifications

Descriptions		X-axis	Y-axis	Z-axis
Axis		KBX-50F-ST-M20N-□0	KBX-30E-ST-M20N-□5	KBX-10E-ST-M05B-□0
Stroke 100 mm units	mm	200 to 1600	150 to 1050	100 to 300
Max. speed	mm/s	1200 (*1)	1200 (*1)	300
Repeatability	mm	±0.01		
Ball screw lead	mm	20	20	5
Motor size	W	200	100	With 100 brake

Acceleration/deceleration time to the max. speed setting: 0.48 sec or greater

Ball screw drive

X-axis: ball screw drive, Straight motor axis
Y-axis: ball screw drive, Straight motor axis
Z-axis: ball screw drive, Straight motor axis

(*1) For the following stroke, max. speed varies

	Stroke (mm)	Max. speed (mm/s)
X-axis	700 to 800	1100
	900 to 1000	1000
	1100 to 1200	700
	1300	500
	1400	400
	1500	300
	1600	300
Y-axis	750	1000
	850	800
	950 to 1050	600

Max. load capacity (kg)		Y-axis stroke									
		150 mm	250 mm	350 mm	450 mm	550 mm	650 mm	750 mm	850 mm	950 mm	1050 mm
Z-axis stroke	100 mm	11.0	11.0	11.0	11.0	11.0	11.0	11.0	10.0	8.0	5.0
	200 mm	10.0	10.0	10.0	10.0	10.0	10.0	10.0	10.0	7.0	4.0
	300 mm	9.0	9.0	9.0	9.0	9.0	9.0	9.0	9.0	6.0	4.0

Dimensions

R: Right-handed

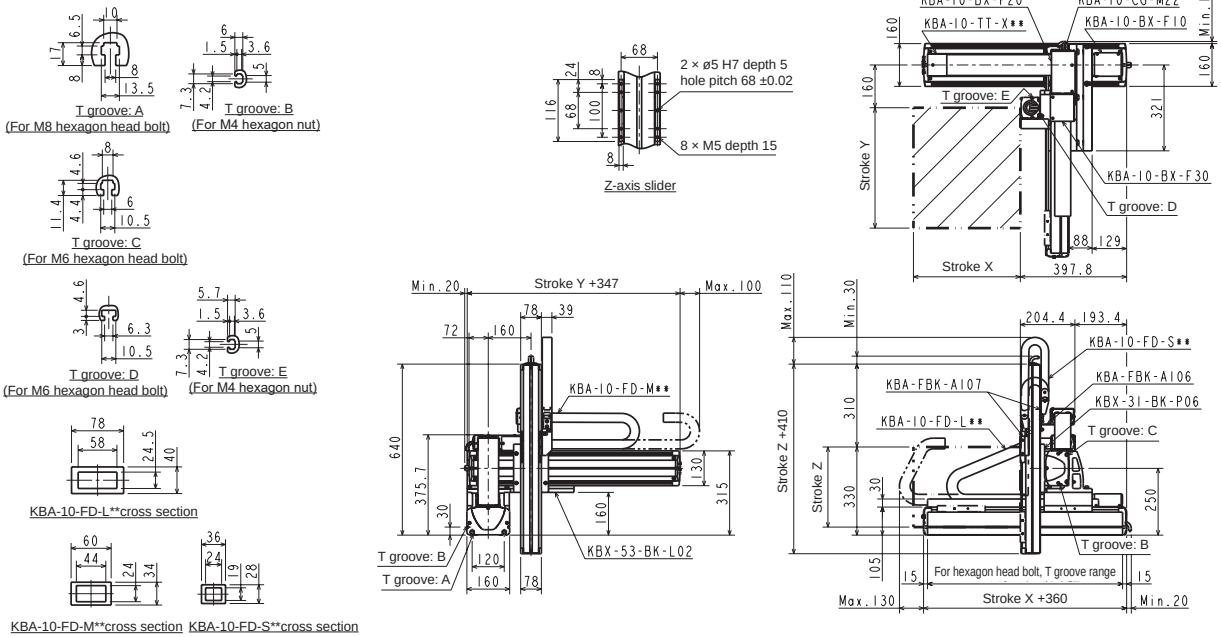

L: Left-handed

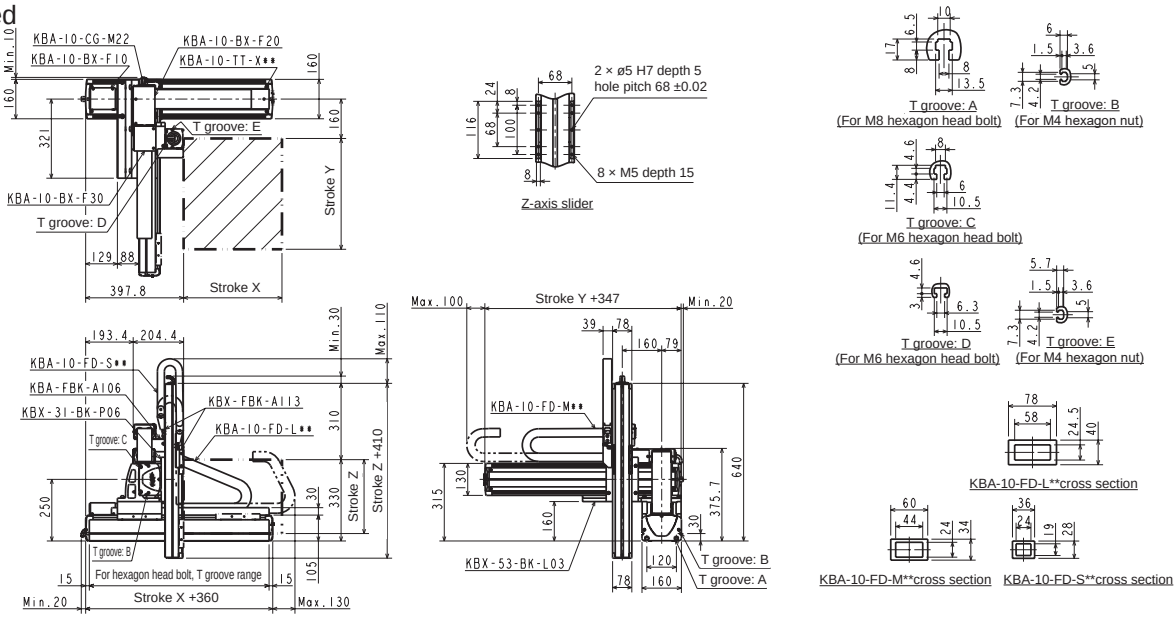

Orthogonal Axis Specifications: X-Y-Z Flexible Duct Specifications

Specifications

Item		X-axis	Y-axis	Z-axis
Axis		KBX-50F-U□-M20N-□0	KBX-30E-ST-M20N-□5	KBX-10E-ST-M05B-□0
Stroke 100 mm units	mm	200 to 1500	150 to 1050	100 to 300
Max. speed	mm/s	1200 (*1)	1200 (*1)	300
Repeatability	mm	±0.01		
Ball screw lead	mm	20	20	5
Motor size	W	200	100	With 100 brake

Acceleration/deceleration time to the max. speed setting: 0.36 sec or greater

Ball screw drive

X-axis: ball screw drive, motor wrap
Y-axis: ball screw drive, Straight motor axis
Z-axis: ball screw drive, motor axis straight

(*1)For the following strokes, maximum speed varies

	Stroke (mm)	Max. speed (mm/s)
X-axis	700 to 800	1100
	900 to 1000	1000
	1100 to 1200	700
	1300	500
	1400	400
	1500	300
Y-axis	750	1000
	850	800
	950 to 1050	600

Max.workload (kg)		Y-axis stroke									
		150 mm	250 mm	350 mm	450 mm	550 mm	650 mm	750 mm	850 mm	950 mm	1050 mm
Z-axis Stroke	100 mm	11.0	11.0	11.0	11.0	11.0	11.0	11.0	10.0	8.0	5.0
	200 mm	10.0	10.0	10.0	10.0	10.0	10.0	10.0	10.0	7.0	4.0
	300 mm	9.0	9.0	9.0	9.0	9.0	9.0	9.0	9.0	6.0	4.0

Dimensions

R: Right-handed

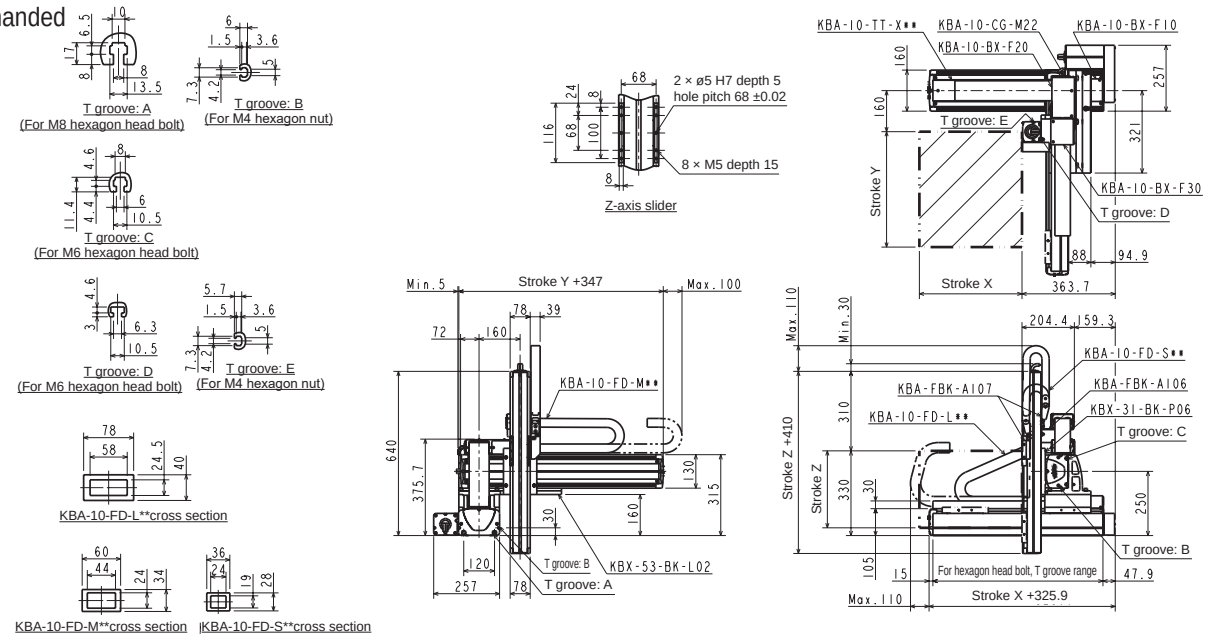

L: Left-handed

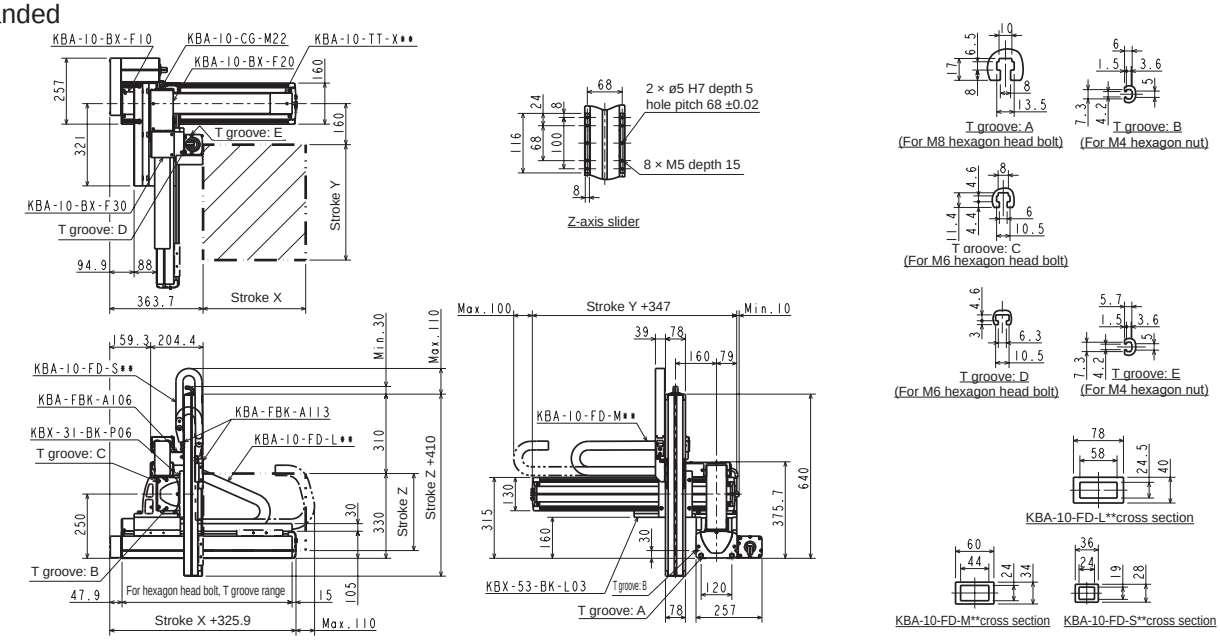

Orthogonal axis specifications: X-Y-Z flexible duct specifications

Specifications

Descriptions		X-axis	Y-axis	Z-axis
Axis		KBX-50F-ST-M20N-□0	KBX-30F-ST-M20N-□0	KBX-10E-ST-M05B-□0
Stroke 100 mm units	mm	200 to 1600	100 to 1000	100 to 300
Max. speed	mm/s	1200 (*1)	1200 (*1)	300
Repeatability	mm	±0.01		
Ball screw lead	mm	20	20	5
Motor size	W	200	200	With 100 brake

Acceleration/deceleration time to the max. speed setting: 0.36 sec or greater

Ball screw drive

X-axis: ball screw drive, Straight motor axis
Y-axis: ball screw drive, Straight motor axis
Z-axis: ball screw drive, Straight motor axis
(*1) For the following stroke, max. speed varies

	Stroke (mm)	Max. speed (mm/s)
X-axis	700 to 800	1100
	900 to 1000	1000
	1100 to 1200	700
	1300	500
	1400	400
	1500	300
	1600	300
Y-axis	700	1000
	800	800
	900 to 1000	600

Max. load capacity (kg)		Y-axis stroke									
		100 mm	200 mm	300 mm	400 mm	500 mm	600 mm	700 mm	800 mm	900 mm	1000 mm
Z-axis stroke	100 mm	15.0	15.0	15.0	15.0	15.0	15.0	14.0	11.0	8.0	5.0
	200 mm	15.0	15.0	15.0	15.0	15.0	15.0	13.0	10.0	7.0	5.0
	300 mm	15.0	15.0	15.0	15.0	15.0	15.0	12.0	10.0	7.0	4.0

Dimensions

R: Right-handed

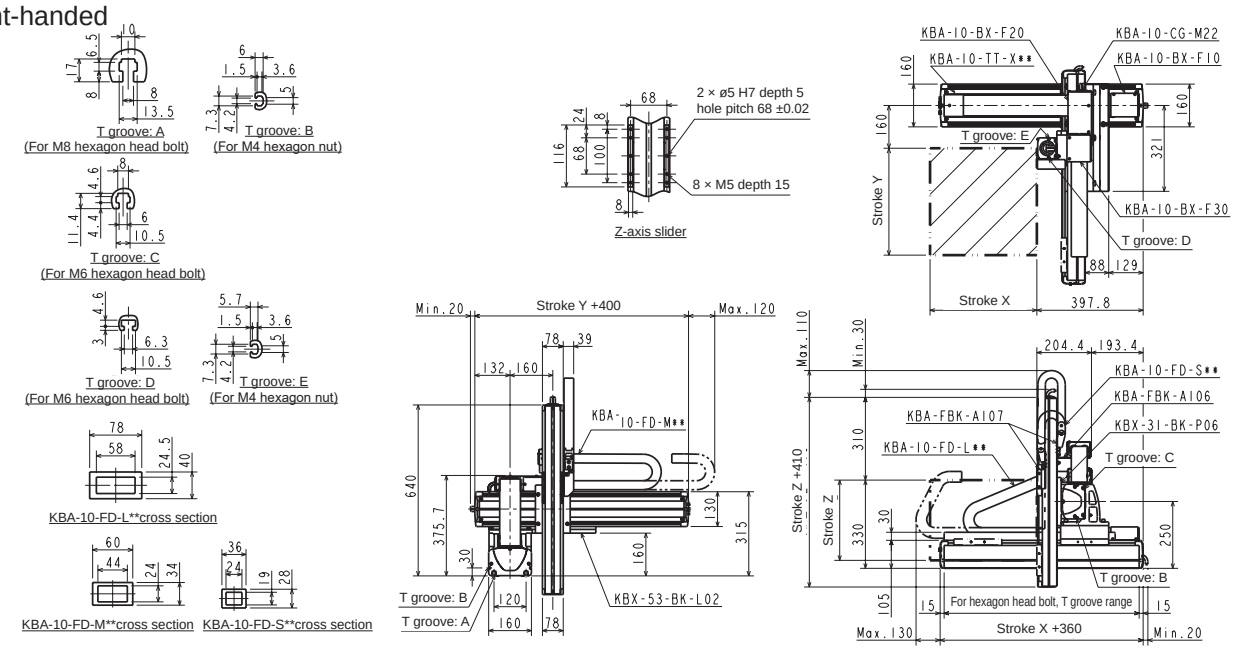

L: Left-handed

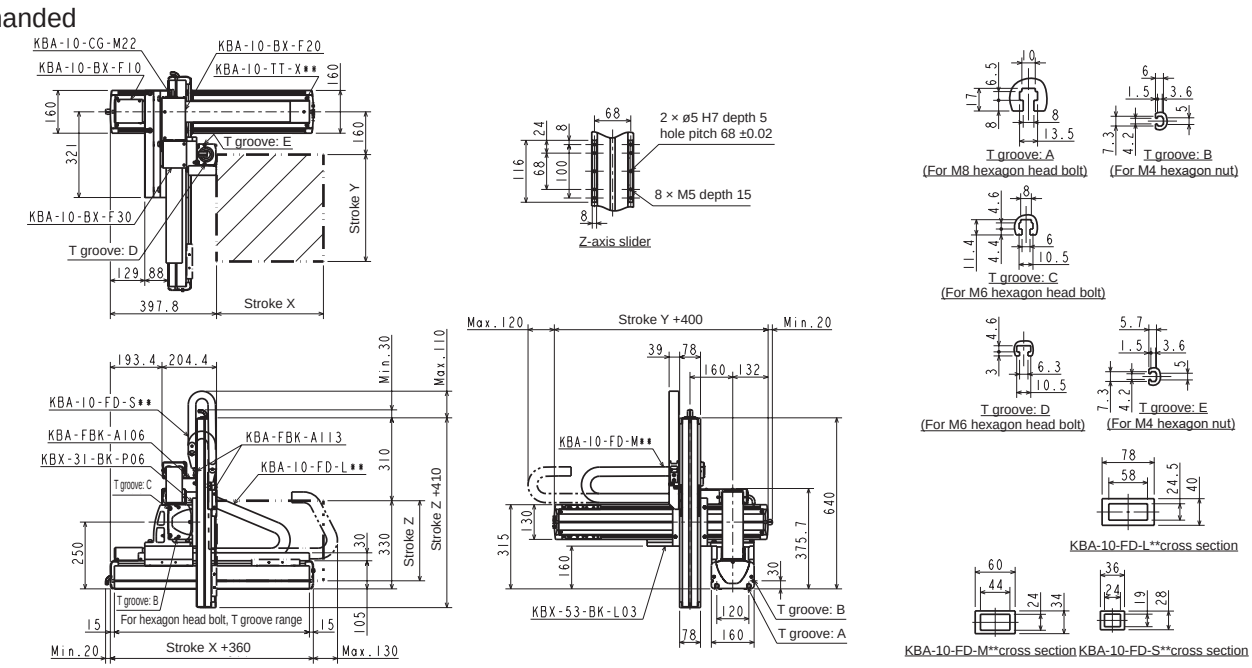

Orthogonal Axis Specifications: X-Y-Z Flexible Duct Specifications

Specifications

Item		X-axis	Y-axis	Z-axis
Axis		KBX-50F-U□-M20N-□0	KBX-30F-ST-M20N-□0	KBX-10E-ST-M05B-□0
Stroke 100 mm units	mm	200 to 1500	100 to 1000	100 to 300
Max. speed	mm/s	1200 (*1)	1200 (*1)	300
Repeatability	mm	±0.01		
Ball screw lead	mm	20	20	5
Motor size	W	200	200	With 100 brake

Acceleration/deceleration time to the max. speed setting: 0.36 sec or greater

Ball screw drive

X-axis: ball screw drive, motor wrap
Y-axis: ball screw drive, Straight motor axis
Z-axis: ball screw drive, motor axis straight

(*1)For the following strokes, maximum speed varies

	Stroke (mm)	Max. speed (mm/s)
X-axis	700 to 800	1100
	900 to 1000	1000
	1100 to 1200	700
	1300	500
	1400	400
	1500	300
Y-axis	700	1000
	800	800
	900 to 1000	600

Max.workload (kg)		Y-axis stroke									
		100 mm	200 mm	300 mm	400 mm	500 mm	600 mm	700 mm	800 mm	900 mm	1000 mm
Z-axis Stroke	100 mm	15.0	15.0	15.0	15.0	15.0	15.0	14.0	11.0	8.0	5.0
	200 mm	15.0	15.0	15.0	15.0	15.0	15.0	13.0	10.0	7.0	5.0
	300 mm	15.0	15.0	15.0	15.0	15.0	15.0	12.0	10.0	7.0	4.0

Dimensions

R: Right-handed

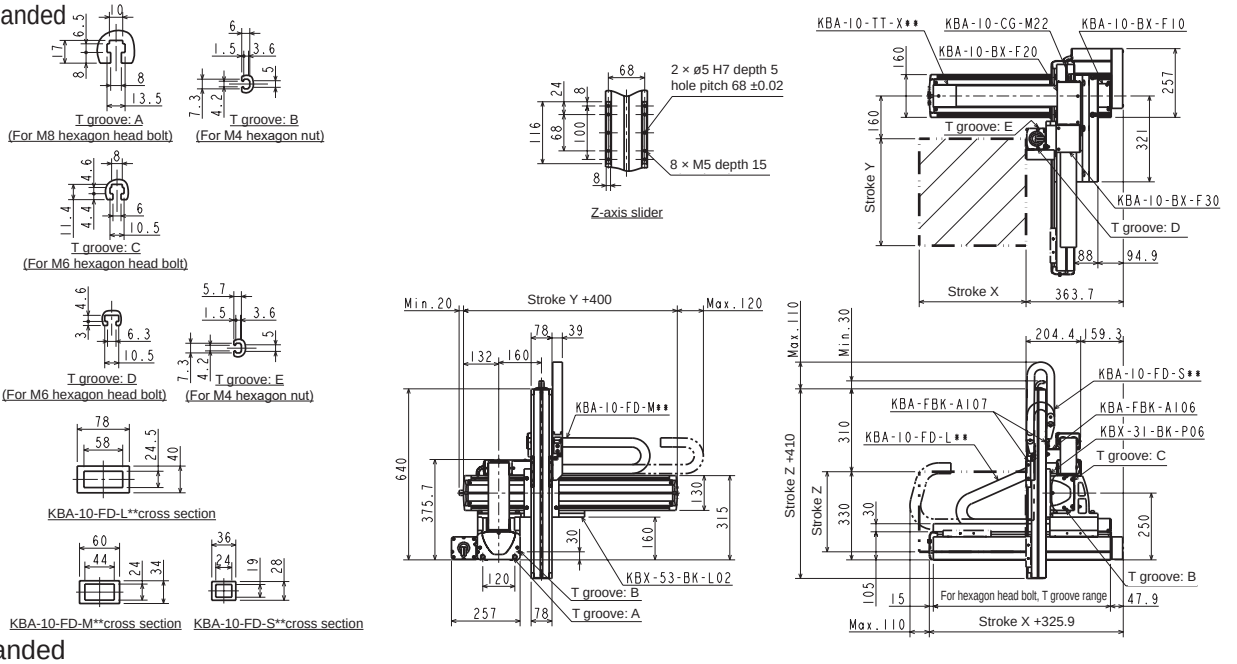

L: Left-handed

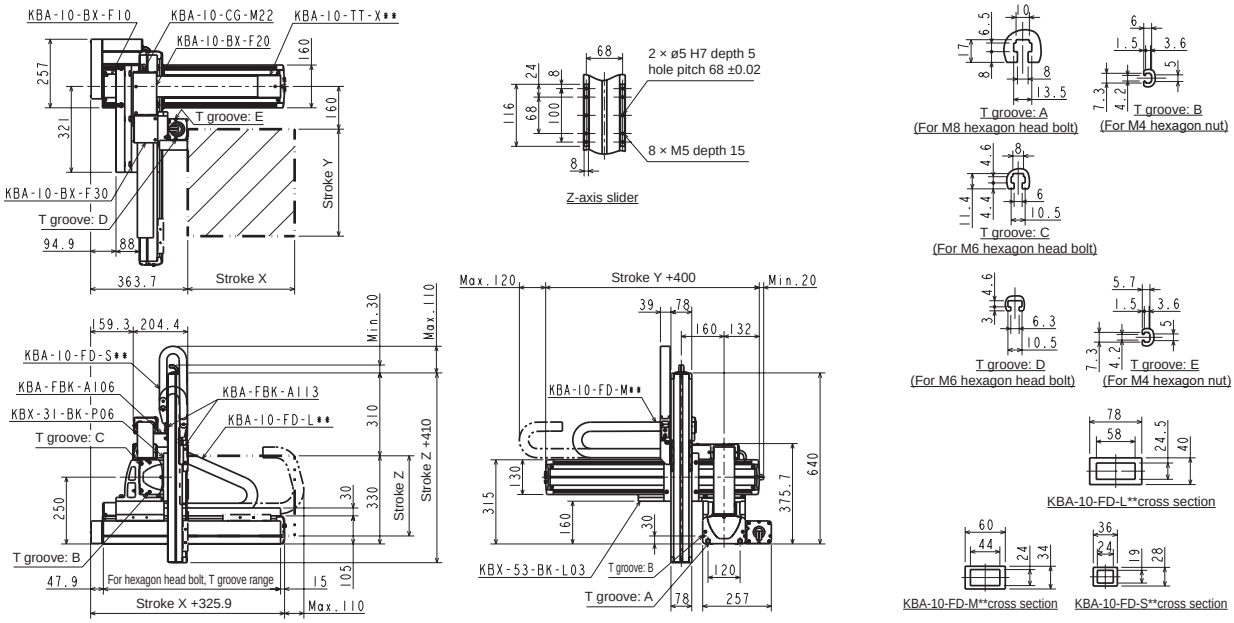

Orthogonal axis specifications: X-Y-Z flexible duct specifications

Specifications

Descriptions		X-axis	Y-axis	Z-axis
Axis		KBX-50G-ST-M20N-□0	KBX-50F-ST-M20N-□0	KBX-30F-ST-M05B-□0
Stroke 100 mm units	mm	200 to 1600	200 to 1000	100 to 300
Max. speed	mm/s	1200 (*1)	1200 (*1)	300
Repeatability	mm	±0.01		
Ball screw lead	mm	20	20	5
Motor size	W	400	200	With 200 brake

Acceleration/deceleration time to the max. speed setting: 0.36 sec or greater

Ball screw drive

X-axis: ball screw drive, Straight motor axis
Y-axis: ball screw drive, Straight motor axis
Z-axis: ball screw drive, Straight motor axis

(*1) For the following stroke, max. speed varies

	Stroke (mm)	Max. speed (mm/s)
X-axis	700 to 800	1100
	900 to 1000	1000
	1100 to 1200	700
	1300	500
	1400	400
	1500	300
	1600	300
Y-axis	700 to 800	1100
	900 to 1000	1000

Max. load capacity (kg)		Y-axis stroke								
		200 mm	300 mm	400 mm	500 mm	600 mm	700 mm	800 mm	900 mm	1000 mm
Z-axis stroke	100 mm	40.0	40.0	32.5	26.0	20.5	16.0	11.5	8.0	1.3
	200 mm	40.0	38.5	31.0	24.5	19.5	14.5	10.5	7.0	–
	300 mm	40.0	37.0	29.5	23.5	18.0	13.5	9.5	5.5	–

Regenerative discharge unit ABSU-4000 is required for the X-axis, and regenerative discharge unit KCA-ABSU-2000 is required for the Z-axis.

Dimensions

R: Right-handed

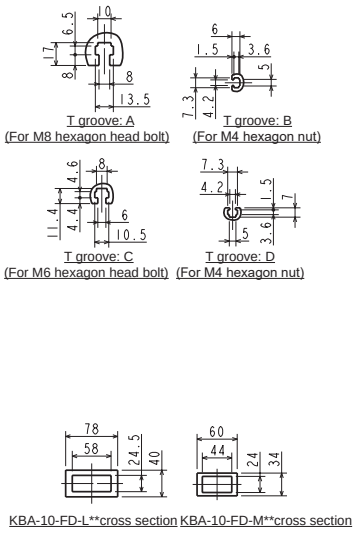

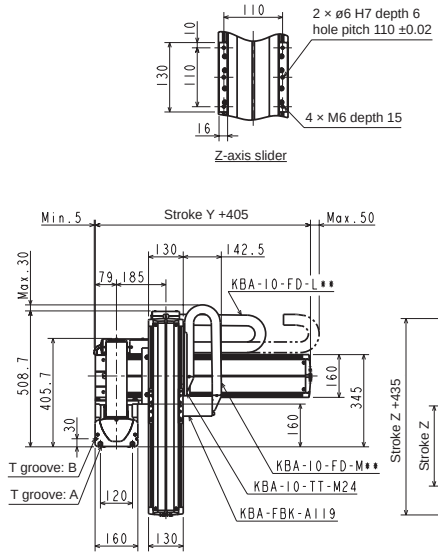

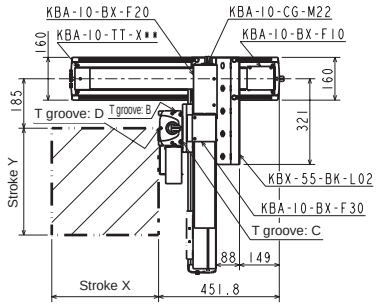

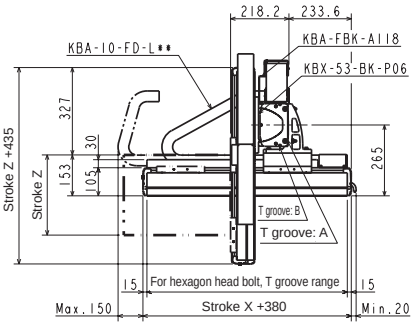

L: Left-handed

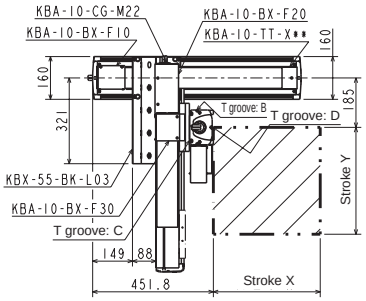

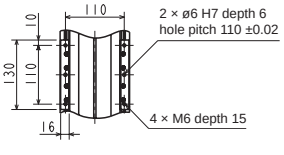

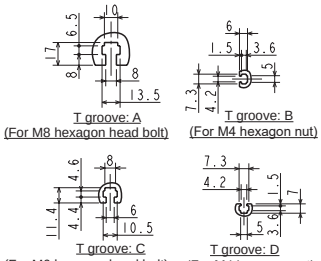

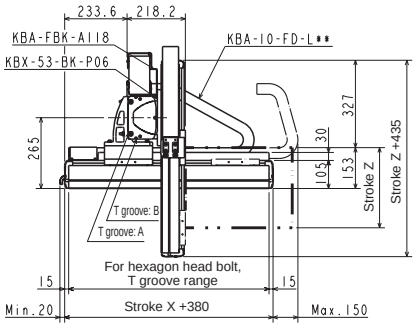

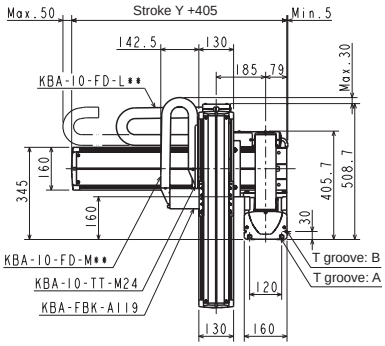

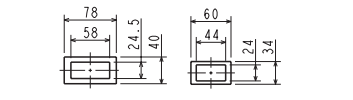

Orthogonal Axis Specifications: X-Y-Z Flexible Duct Specifications

Specifications

Item		X-axis	Y-axis	Z-axis
Axis		KBX-60J-ST-M20N-□0	KBX-50G-ST-M20N-□0	KBX-30F-ST-M05B-□0
Stroke 100 mm units	mm	200 to 1700	200 to 1500	100 to 300
Max. speed	mm/s	900 (*1)	1200 (*1)	300
Repeatability	mm	±0.01		
Ball screw lead	mm	20	20	5
Motor output	W	750	400	With 200 brake

Acceleration/deceleration time to the max. speed setting: 0.36 sec or greater

Ball screw drive

X-axis: ball screw drive, motor axis straight
Y-axis: ball screw drive, Straight motor axis
Z-axis: ball screw drive, motor axis straight

(*1)For the following strokes, maximum speed varies

	Stroke (mm)	Max. speed (mm/s)
X-axis	1100	700
	1200	600
	1300	500
	1400 to 1500	400
	1600 to 1700	300
Y-axis	700 to 800	1100
	900 to 1000	1000
	1100 to 1200	700
	1300	500
	1400	400
	1500	300

Max.workload (kg)		Y-axis stroke													
		200 mm	300 mm	400 mm	500 mm	600 mm	700 mm	800 mm	900 mm	1000 mm	1100 mm	1200 mm	1300 mm	1400 mm	1500 mm
Z-axis Stroke	100 mm	40.0	40.0	40.0	40.0	40.0	40.0	40.0	35.0	30.0	21.3	14.3	9.3	5.3	2.3
	200 mm	40.0	40.0	40.0	40.0	40.0	40.0	39.5	34.0	28.5	20.1	13.1	8.1	4.1	1.1
	300 mm	40.0	40.0	40.0	40.0	40.0	40.0	38.0	32.5	27.5	18.9	11.9	6.9	2.9	-

The regenerative discharge unit is required for all axes.
1) X-axis: regenerative discharge unit type: KCA-ABSU-8000
2) Y-axis: regenerative discharge unit type: KCA-ABSU-4000
3) Z-axis: regenerative discharge unit type: KCA-ABSU-2000

Dimensions

R: Right-handed

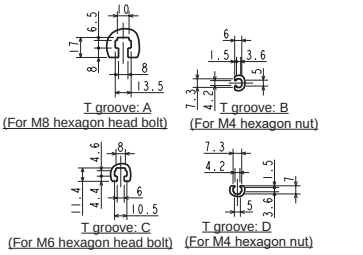

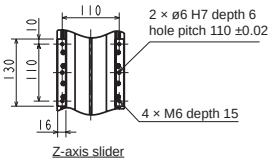

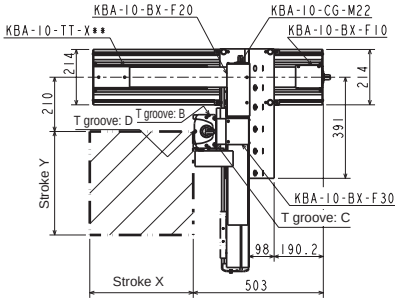

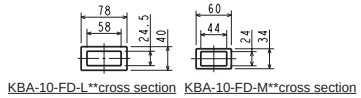

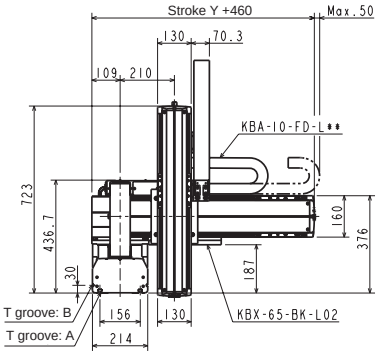

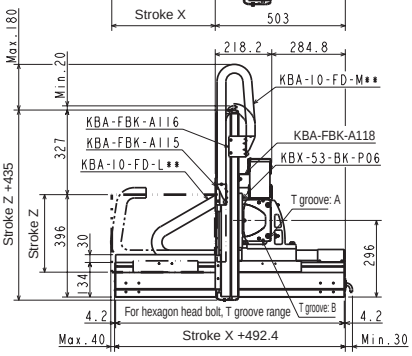

L: Left-handed

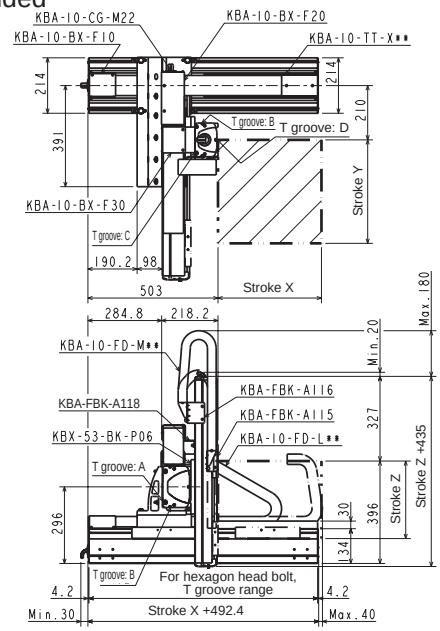

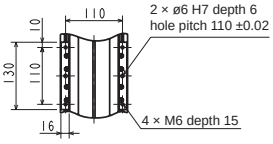

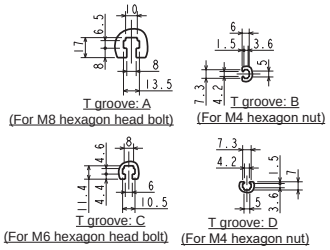

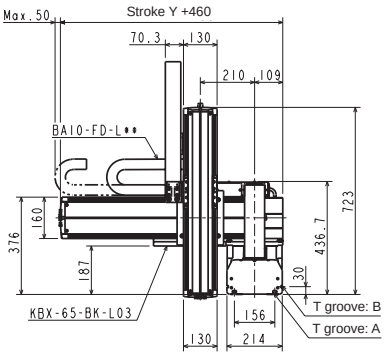

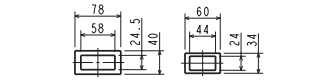

Orthogonal axis specifications: X-Y-Z flexible duct specifications

Specifications

Descriptions		X-axis	Y-axis	Z-axis
Axis		KBX-10F-BT-M21N-□0	KBX-10E-B□-S21N-□5	KBX-T7D-ST-M06B-□□
Stroke X, Y-axes 100 mm units Z-axis 50 mm units	mm	100 to 2500	150 to 450	50 to 300
Max. speed	mm/s	1000	1000	400
Repeatability	mm	±0.04	±0.04	±0.02
Ball screw lead	mm	21 or equiv.	21 or equiv.	6
Motor output	W	200	100	With 50 brake

Acceleration/deceleration time to the max. speed setting: 0.3 sec or greater

Timing belt

X-axis: timing belt drive
Motor: Top (R) / (L)
Y-axis: timing belt drive
Motor: Right (R)/Right (L)
Z-axis: ball screw drive
Straight motor axis

Max. load capacity (kg)		Y-axis stroke			
		150 mm	250 mm	350 mm	450 mm
Z-axis stroke	50, 100 mm	4.0	3.5	2.5	1
	150, 200 mm	4.0	2.5	2	0.6
	250, 300 mm	3.5	2.5	1.5	0.2

Dimensions

The value in ( ) is compatible with X-axis stroke 1,050 mm or more

R: Right-handed

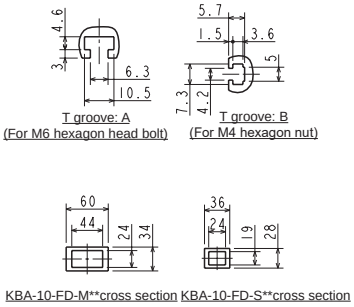

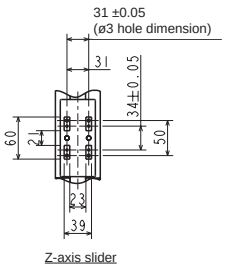

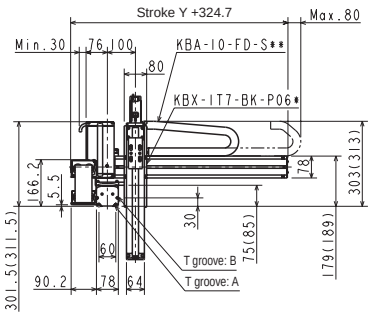

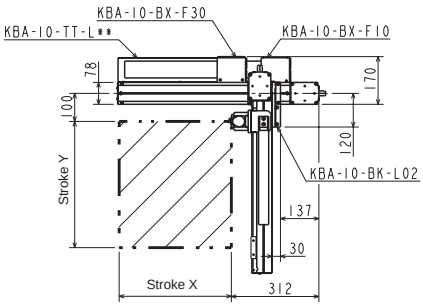

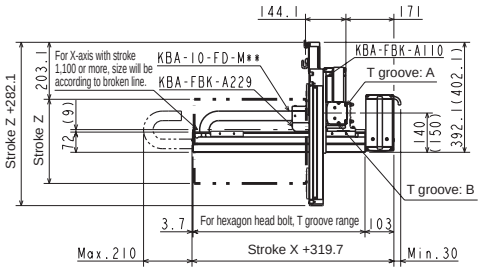

L: Left-handed

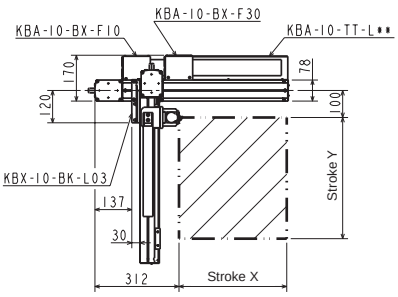

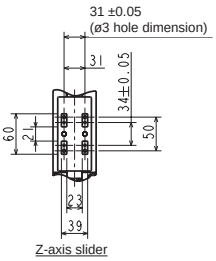

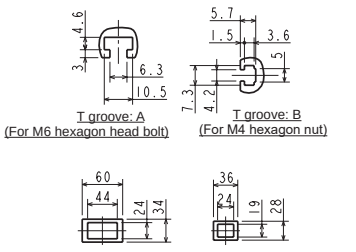

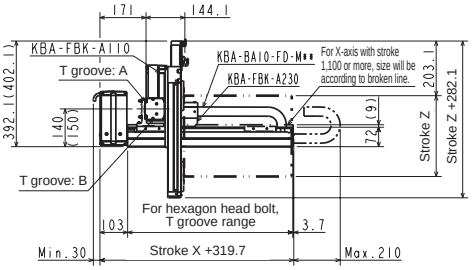

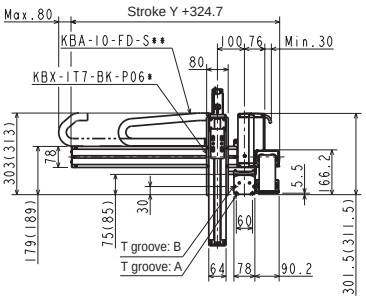

Orthogonal axis specifications: X-Y-Z flexible duct specifications

Specifications

Descriptions		X-axis	Y-axis	Z-axis
Axis		KBX-30F-BT-M21N-□0	KBX-10E-B□-S21N-□5	KBX-T7D-ST-M06B-□□
Stroke X, Y-axes 100 mm units Z-axis 50 mm units	mm	100 to 3200	150 to 750	50 to 300
Max. speed	mm/s	1000	1000	400
Repeatability	mm	±0.04	±0.04	±0.02
Ball screw lead	mm	21 or equiv.	21 or equiv.	6
Motor output	W	200	100	With 50 brake

Acceleration/deceleration time to the max. speed setting: 0.3 sec or greater

Timing belt

X-axis: timing belt drive
Motor: Top (R)/(L)
Y-axis: timing belt drive
Motor: Right (R)/Right (L)
Z-axis: ball screw drive
Straight motor axis

Max. load capacity (kg)		Y-axis stroke						
		150 mm	250 mm	350 mm	450 mm	550 mm	650 mm	750 mm
Z-axis stroke	50, 100 mm	4.0	4.0	4.0	4.0	3.9	3.4	1.6
	150, 200 mm	4.0	4.0	4.0	4.0	3.7	3.1	1.3
	250, 300 mm	4.0	4.0	4.0	4.0	3.5	2.8	1

Dimensions

The value in ( ) is compatible with X-axis stroke 1,850 mm or more

R: Right-handed

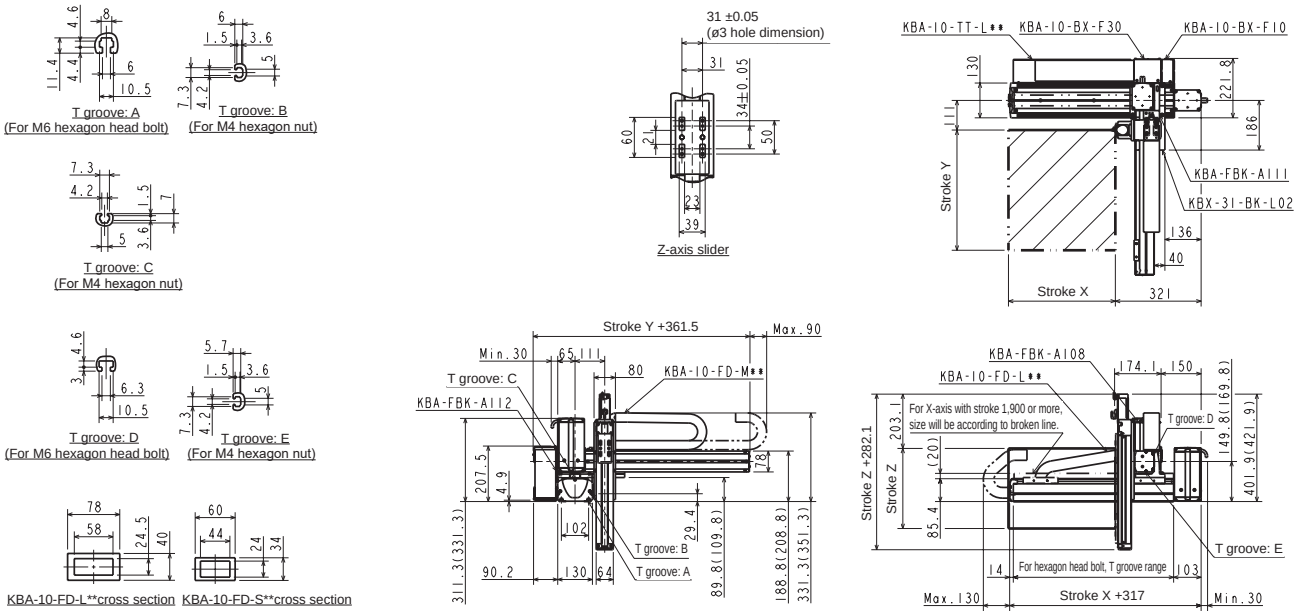

L: Left-handed

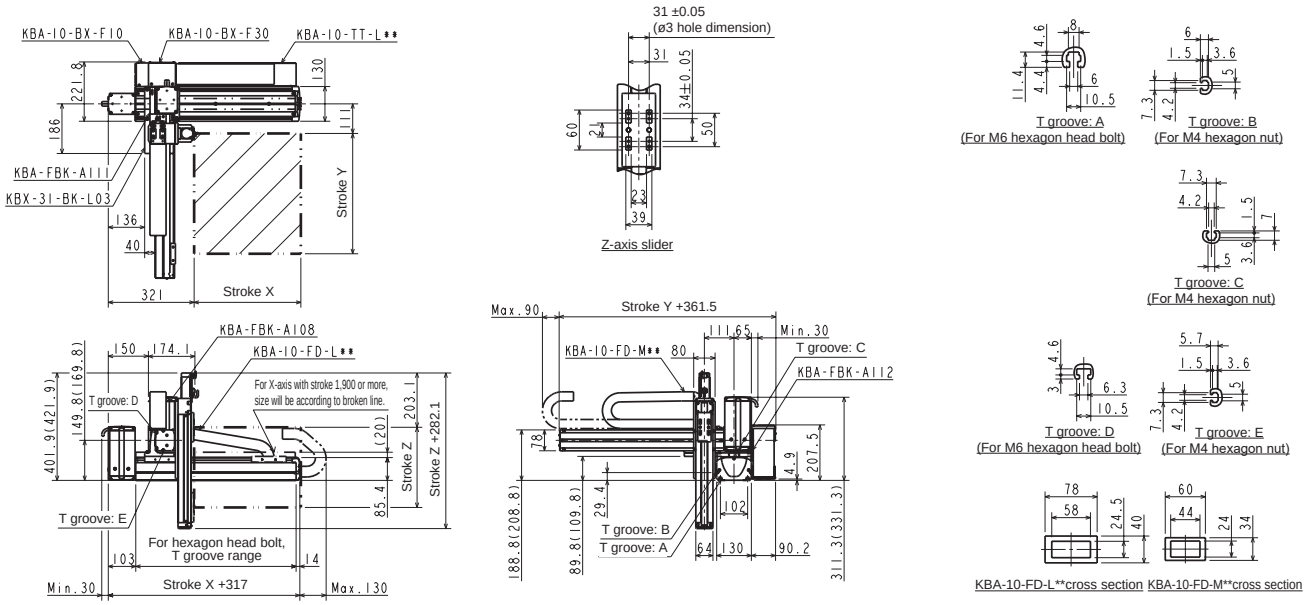

Orthogonal axis specifications: X-Y-Z flexible duct specifications

Specifications

Descriptions		X-axis	Y-axis	Z-axis
Axis		KBX-30F-BT-M21N-□0	KBX-10E-B□-M21N-□0	KBX-10E-U□-S10B-□5
Stroke 100 mm units	mm	100 to 3200	100 to 500	150 to 350
Max. speed	mm/s	1000	1000	600
Repeatability	mm	±0.04	±0.04	±0.01
Ball screw lead	mm	21 or equiv.	21 or equiv.	10
Motor size	W	200	100	With 100 brake

Acceleration/deceleration time to the max. speed setting: 0.36 sec or greater

Timing belt

X-axis: timing belt drive
Motor: Top (R)/(L)
Y-axis: timing belt drive
Motor: Right (R)/Left (L)
Z-axis: ball screw drive
Motor: Left (R)/Right (L)

Max. load capacity (kg)		Y-axis stroke				
		100 mm	200 mm	300 mm	400 mm	500 mm
Z-axis stroke	150 mm	8.0	8.0	7.0	4.0	2.0
	250 mm	7.0	7.0	6.0	4.0	1.0
	350 mm	6.0	6.0	6.0	3.0	1.0

Dimensions

The value in ( ) is compatible with X-axis stroke 1,850 mm or more

R: Right-handed

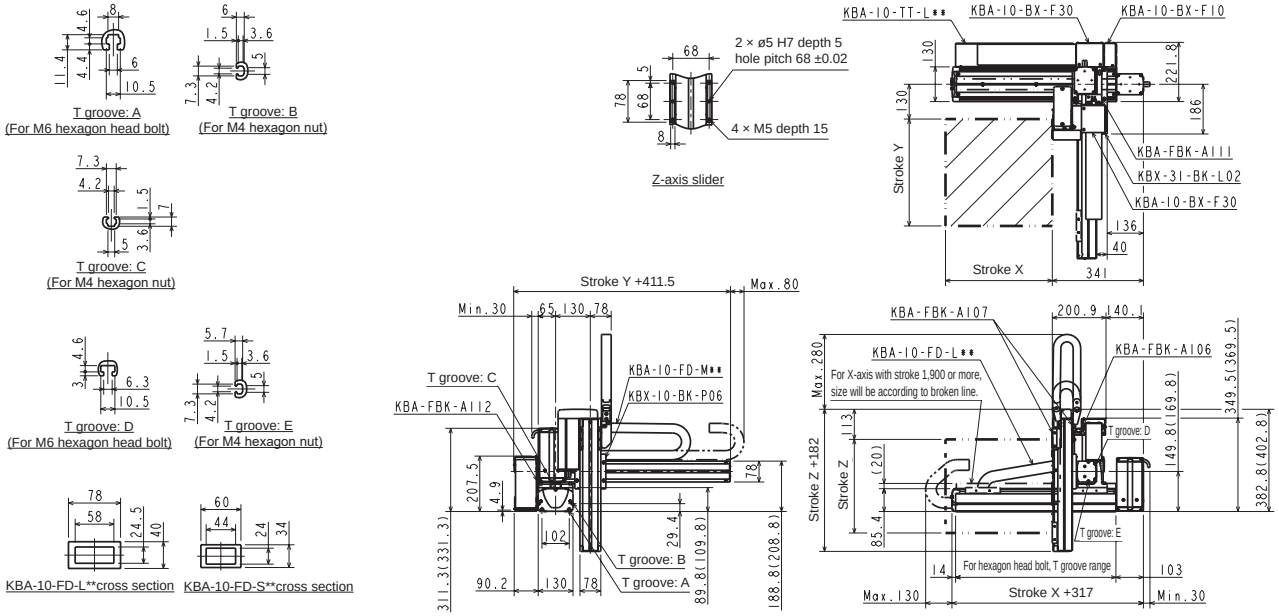

L: Left-handed

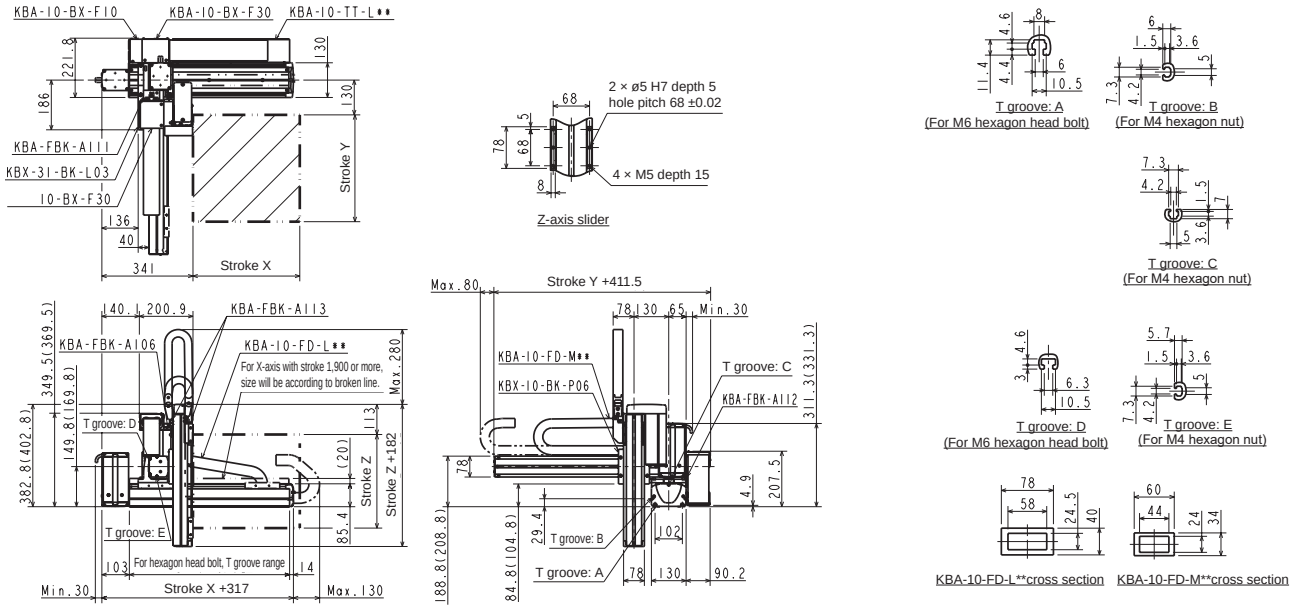

Orthogonal axis specifications: X-Y-Z flexible duct specifications

Specifications

Descriptions		X-axis	Y-axis	Z-axis
Axis		KBX-50F-BT-M21N-□0	KBX-30E-B□-M21N-□0	KBX-10E-ST-M05B-□0
Stroke 100 mm units	mm	200 to 3500	100 to 1000	100 to 300
Max. speed	mm/s	1000	1000	300
Repeatability	mm	±0.04	±0.04	±0.01
Ball screw lead	mm	21 or equiv.	21 or equiv.	5
Motor size	W	200	100	With 100 brake

Acceleration/deceleration time to the max. speed setting: 0.36 sec or greater

Timing belt

X-axis: timing belt drive
Motor: Top (R)/(L)
Y-axis: timing belt drive
Motor: Right (R)/Right (L)
Z-axis: ball screw drive
Straight motor axis

Max. load capacity (kg)		Y-axis stroke									
		100 mm	200 mm	300 mm	400 mm	500 mm	600 mm	700 mm	800 mm	900 mm	1000 mm
Z-axis stroke	100 mm	7.0	7.0	7.0	7.0	7.0	7.0	7.0	7.0	6.0	5.0
	200 mm	7.0	7.0	7.0	7.0	7.0	7.0	7.0	7.0	5.0	4.0
	300 mm	6.0	6.0	6.0	6.0	6.0	6.0	6.0	6.0	5.0	4.0

Dimensions

The value in ( ) is compatible with X-axis stroke 1,850 mm or more

R: Right-handed

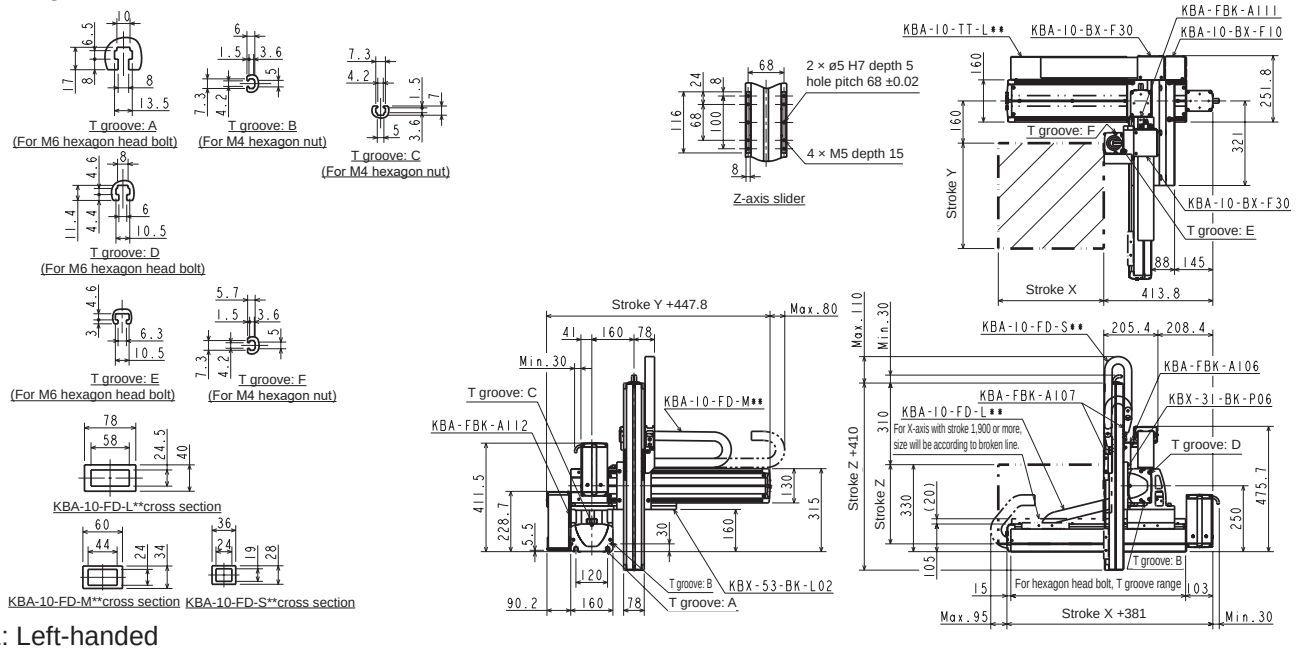

L: Left-handed

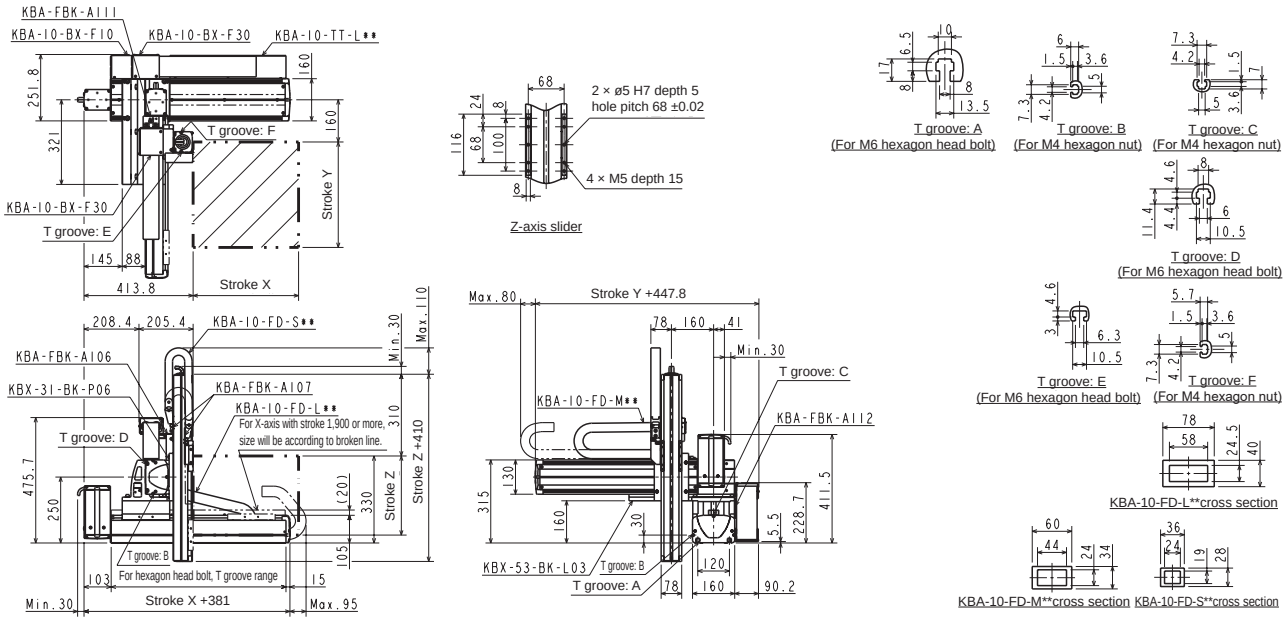

Orthogonal axis specifications: X-Y-Z flexible duct specifications

Specifications

Descriptions		X-axis	Y-axis	Z-axis
Axis		KBX-50F-BT-M21N-□0	KBX-30F-B□-M21N-□0	KBX-10E-ST-M05B-□0
Stroke 100 mm units	mm	200 to 3500	100 to 1000	100 to 300
Max. speed	mm/s	1000	1000	300
Repeatability	mm	±0.04	±0.04	±0.01
Ball screw lead	mm	21 or equiv.	21 or equiv.	5
Motor size	W	200	200	With 100 brake

Acceleration/deceleration time to the max. speed setting: 0.36 sec or greater

Timing belt

X-axis: timing belt drive
Motor: Top (R)/(L)
Y-axis: timing belt drive
Motor: Right (R)/Right (L)
Z-axis: ball screw drive
Straight motor axis

Max. load capacity (kg)		Y-axis stroke									
		100 mm	200 mm	300 mm	400 mm	500 mm	600 mm	700 mm	800 mm	900 mm	1000 mm
Z-axis stroke	100 mm	14.0	13.0	12.0	11.0	9.0	8.0	6.0	6.0	5.0	4.0
	200 mm	13.0	12.0	11.0	10.0	8.0	7.0	6.0	6.0	5.0	4.0
	300 mm	13.0	12.0	11.0	9.0	7.0	6.0	5.0	5.0	4.0	3.0

Dimensions

R: Right-handed

The value in ( ) is compatible with X-axis stroke 1,850 mm or more

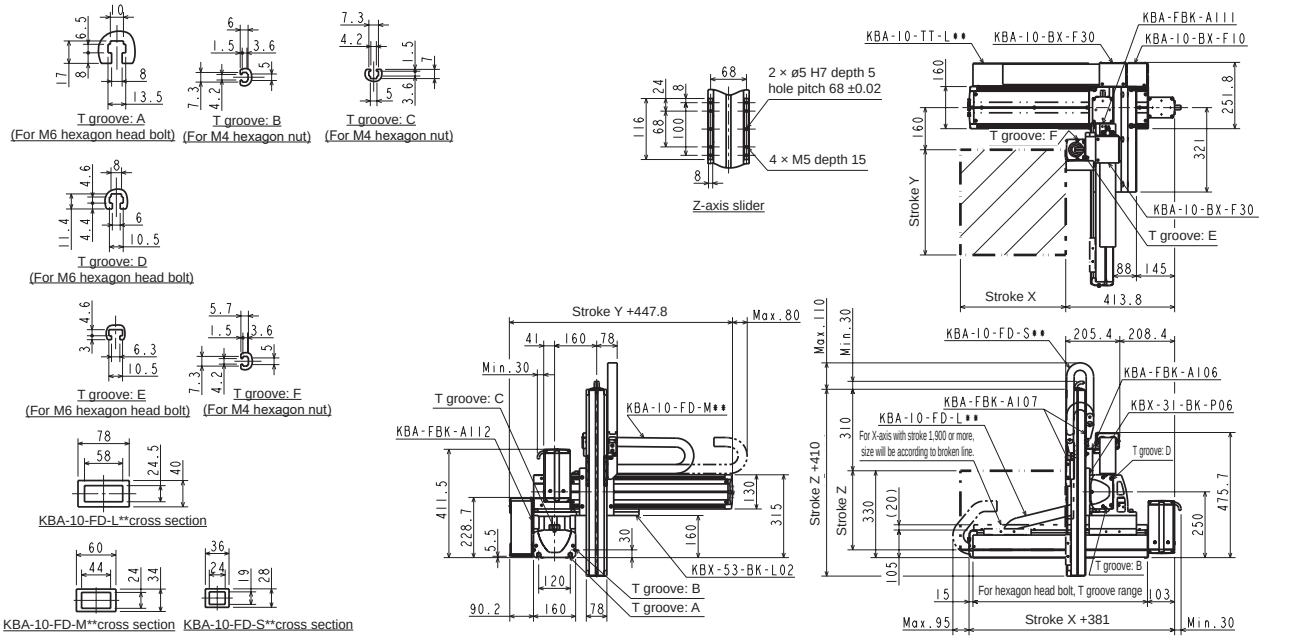

L: Left-handed

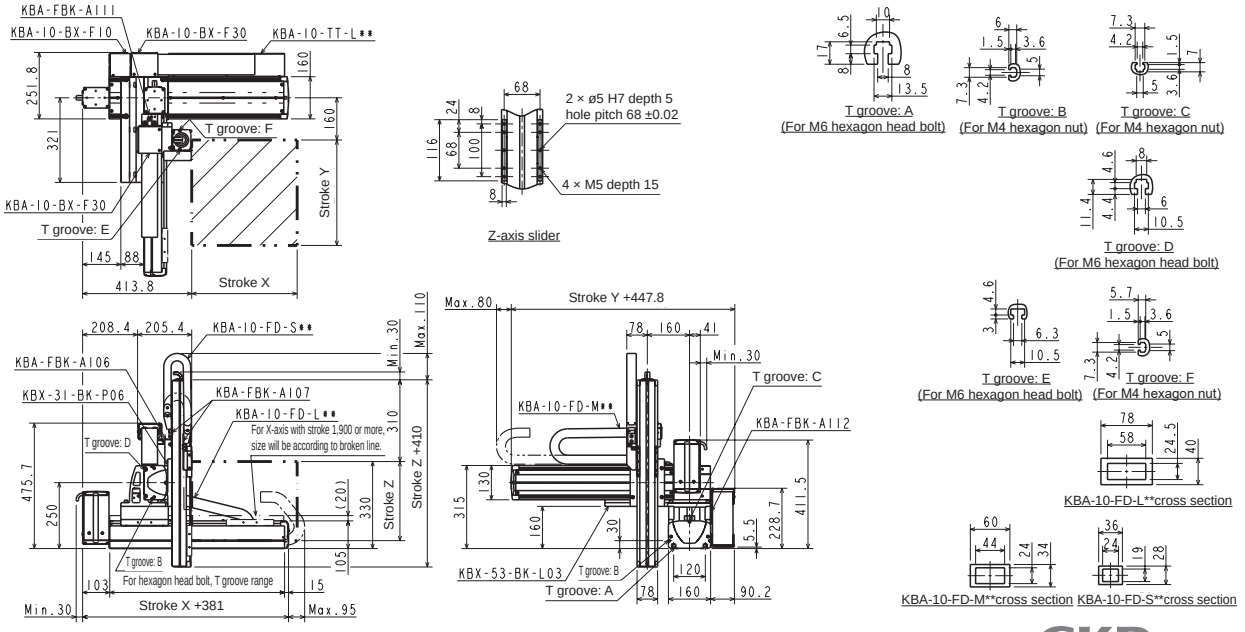

Orthogonal axis specifications: X-Y-Z-R flexible duct specifications

Specifications

Descriptions	X-axis	Y-axis	Z-axis	R-axis
Axis	KBX-50F-ST-M20N-□0	KBX-30E-ST-M20N-□5	KBX-10E-ST-M05B-□0	KBX-00D-RH-A
Stroke mm 100 mm units	200 to 1600	150 to 1050	100 to 300	360°
Max. speed mm/s	1200 (*1)	1200 (*1)	300	360°/s
Repeatability mm	±0.01	±0.01	±0.01	±0.025°
Ball screw lead mm	20	20	5	1/50 (reduction ratio)
Motor size W	200	100	With 100 brake	50

Acceleration/deceleration time to the max. speed setting: 0.36 sec or greater

Harmonic drive

X-axis: ball screw drive, Straight motor axis
Y-axis: ball screw drive, Straight motor axis
Z-axis: ball screw drive, Straight motor axis
R-axis: Harmonic drive

(*1) For the following stroke, max. speed varies

	Stroke (mm)	Max. speed (mm/s)
X-axis	700 to 800	1100
	900 to 1000	1000
	1100 to 1200	700
	1300	500
	1400	400
	1500	300
	1600	300
Y-axis	750	1000
	850	800
	950 to 1050	600

Max. load capacity (kg)		Y-axis stroke									
		150 mm	250 mm	350 mm	450 mm	550 mm	650 mm	750 mm	850 mm	950 mm	1050 mm
Z-axis stroke	100 mm	5.0	5.0	5.0	5.0	5.0	5.0	5.0	5.0	5.0	3.0
	200 mm	5.0	5.0	5.0	5.0	5.0	5.0	5.0	5.0	4.0	2.0
	300 mm	5.0	5.0	5.0	5.0	5.0	5.0	5.0	5.0	4.0	1.0

Dimensions

R: Right-handed

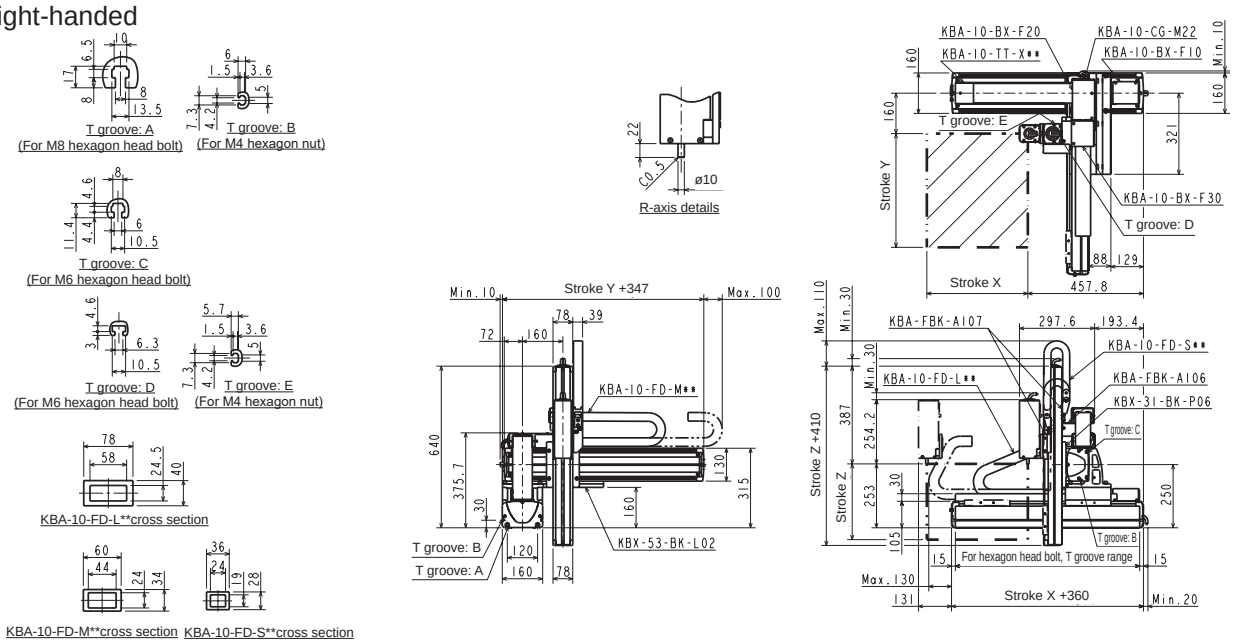

L: Left-handed

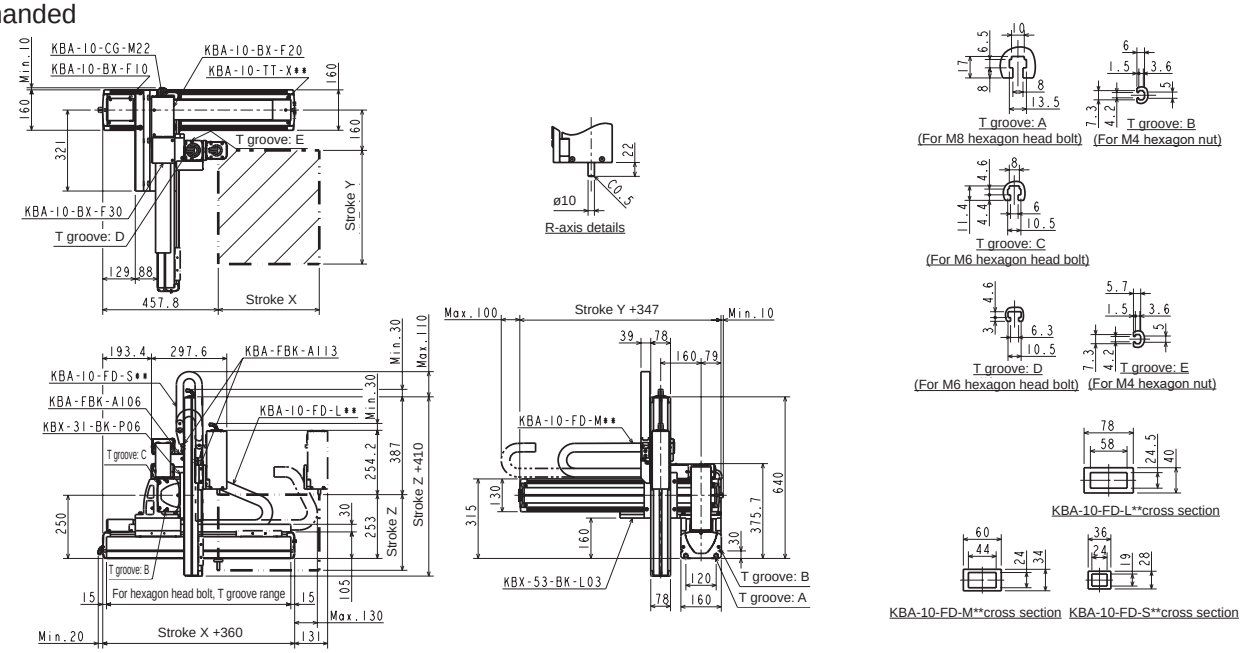

Orthogonal Axis Specifications: X-Y-Z-R Flexible Duct Specifications

Specifications

Item	X-axis	Y-axis	Z-axis	R-axis
Axis	KBX-50F-U□-M20N-□0	KBX-30E-ST-M20N-□5	KBX-10E-ST-M05B-□0	KBX-00D-RH-A
Stroke mm 100 mm units	200 to 1500	150 to 1050	100 to 300	360°
Max. speed mm/s	1200 (*1)	1200 (*1)	300	360°/s
Repeatability mm	±0.01	±0.01	±0.01	±0.025°
Ball screw lead mm	20	20	5	1/50 (reduction ratio)
Motor size W	200	100	With 100 brake	50

Acceleration/deceleration time to the max. speed setting: 0.36 sec or greater

Harmonic drive

X-axis: ball screw drive, motor wrap
Y-axis: ball screw drive, Straight motor axis
Z-axis: ball screw drive, motor axis straight
R-axis: Harmonic drive

(*1)For the following strokes, maximum speed varies

	Stroke (mm)	Max. speed (mm/s)
X-axis	700 to 800	1100
	900 to 1000	1000
	1100 to 1200	700
	1300	500
	1400	400
	1500	300
Y-axis	750	1000
	850	800
	950 to 1050	600

Max.workload (kg)		Y-axis stroke									
		150 mm	250 mm	350 mm	450 mm	550 mm	650 mm	750 mm	850 mm	950 mm	1050 mm
Z-axis Stroke	100 mm	5.0	5.0	5.0	5.0	5.0	5.0	5.0	5.0	5.0	3.0
	200 mm	5.0	5.0	5.0	5.0	5.0	5.0	5.0	5.0	4.0	2.0
	300 mm	5.0	5.0	5.0	5.0	5.0	5.0	5.0	5.0	4.0	1.0

Dimensions

R: Right-handed

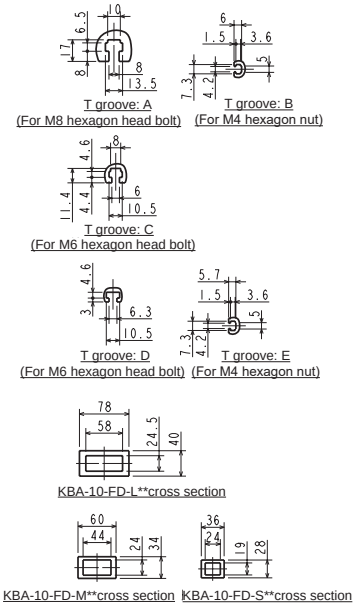

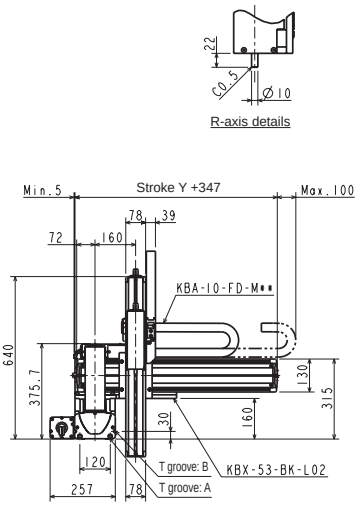

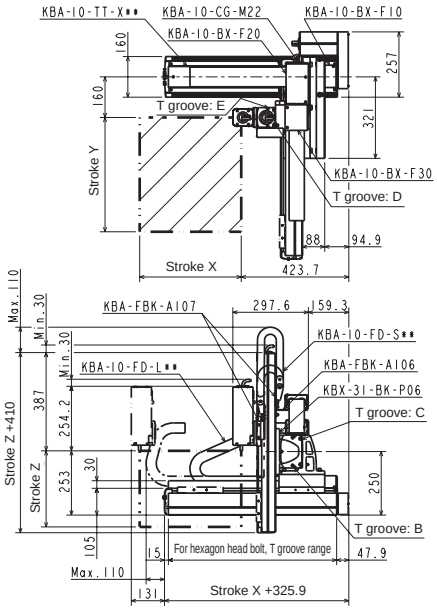

L: Left-handed

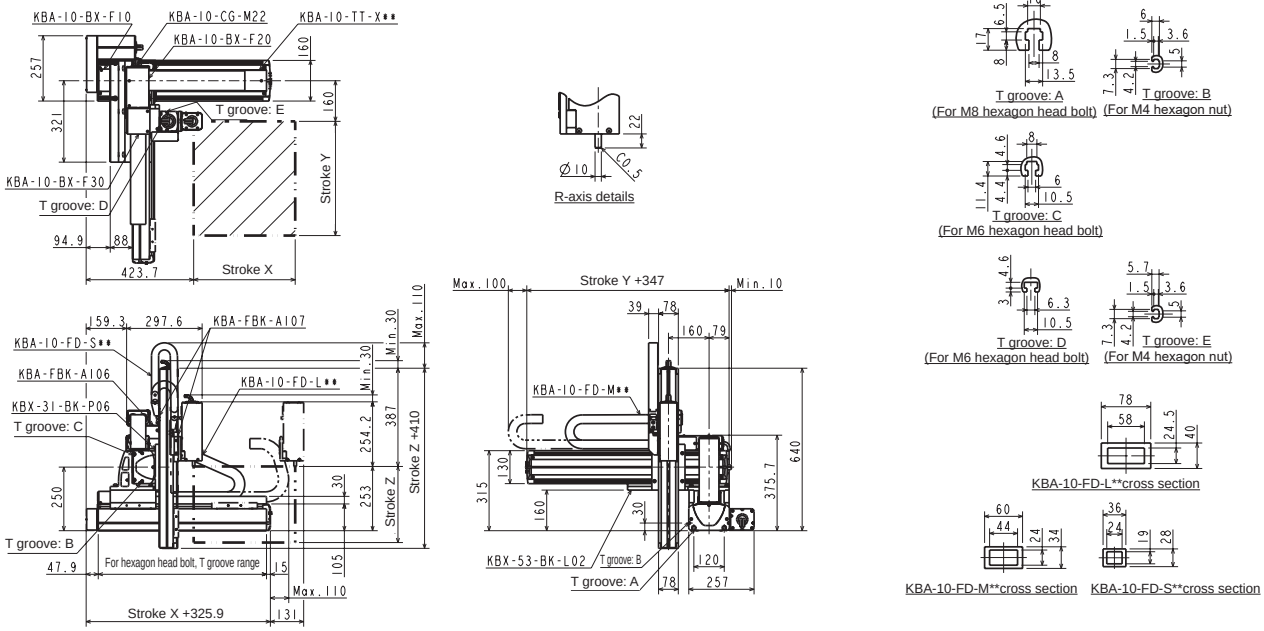

Orthogonal axis specifications: X-Y-Z-R flexible duct specifications

Specifications

Descriptions		X-axis	Y-axis	Z-axis	R-axis
Axis		KBX-50F-ST-M20N-□0	KBX-30F-ST-M20N-□0	KBX-10E-ST-M05B-□0	KBX-00D-RH-A
Stroke 100 mm units	mm	200 to 1600	100 to 1000	100 to 300	360°
Max. speed	mm/s	1200 (*1)	1200 (*1)	300	360°/s
Repeatability	mm	±0.01	±0.01	±0.01	±0.025°
Ball screw lead	mm	20	20	5	1/50 (reduction ratio)
Motor size	W	200	200	With 100 brake	50

Acceleration/deceleration time to the max. speed setting: 0.36 sec or greater

Harmonic drive

X-axis: ball screw drive, Straight motor axis
Y-axis: ball screw drive, Straight motor axis
Z-axis: ball screw drive, Straight motor axis
R-axis: Harmonic drive

(*1) For the following stroke, max. speed varies

	Stroke (mm)	Max. speed (mm/s)
X-axis	700 to 800	1100
	900 to 1000	1000
	1100 to 1200	700
	1300	500
	1400	400
	1500	300
	1600	300
Y-axis	700	1000
	800	800
	900 to 1000	600

Max. load capacity (kg)		Y-axis stroke									
		100 mm	200 mm	300 mm	400 mm	500 mm	600 mm	700 mm	800 mm	900 mm	1000 mm
Z-axis stroke	100 mm	5.0	5.0	5.0	5.0	5.0	5.0	5.0	5.0	5.0	3.0
	200 mm	5.0	5.0	5.0	5.0	5.0	5.0	5.0	5.0	5.0	2.0
	300 mm	5.0	5.0	5.0	5.0	5.0	5.0	5.0	5.0	4.0	1.0

Dimensions

R: Right-handed

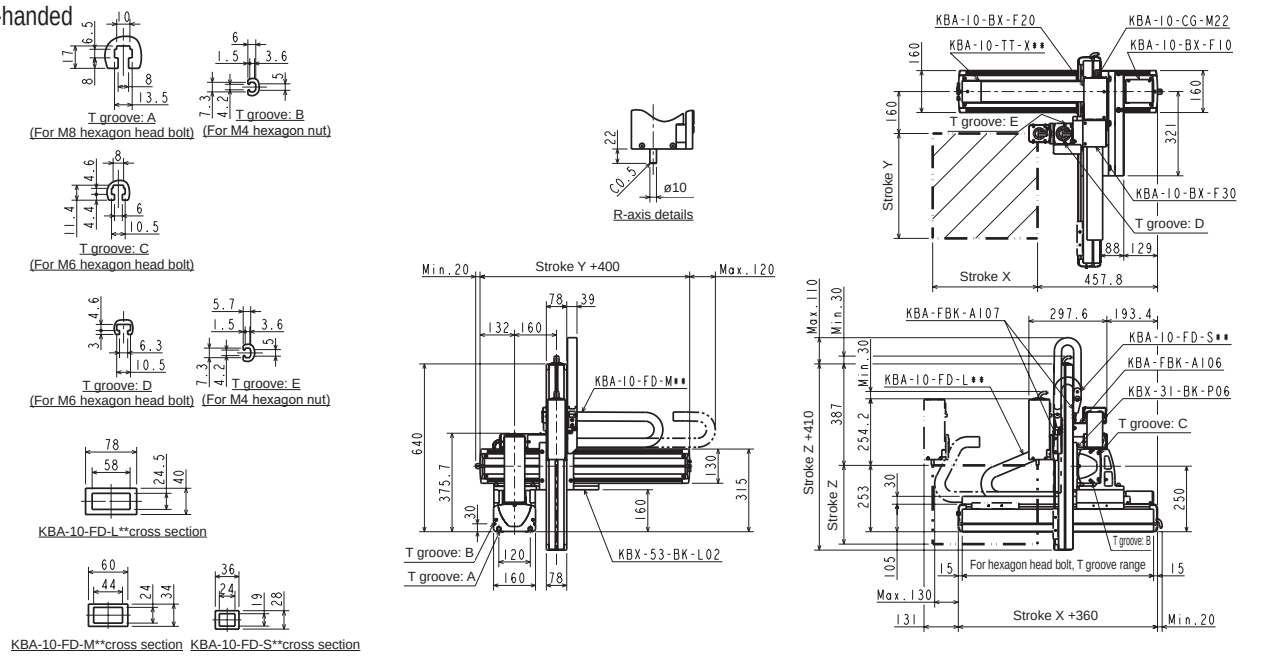

L: Left-handed

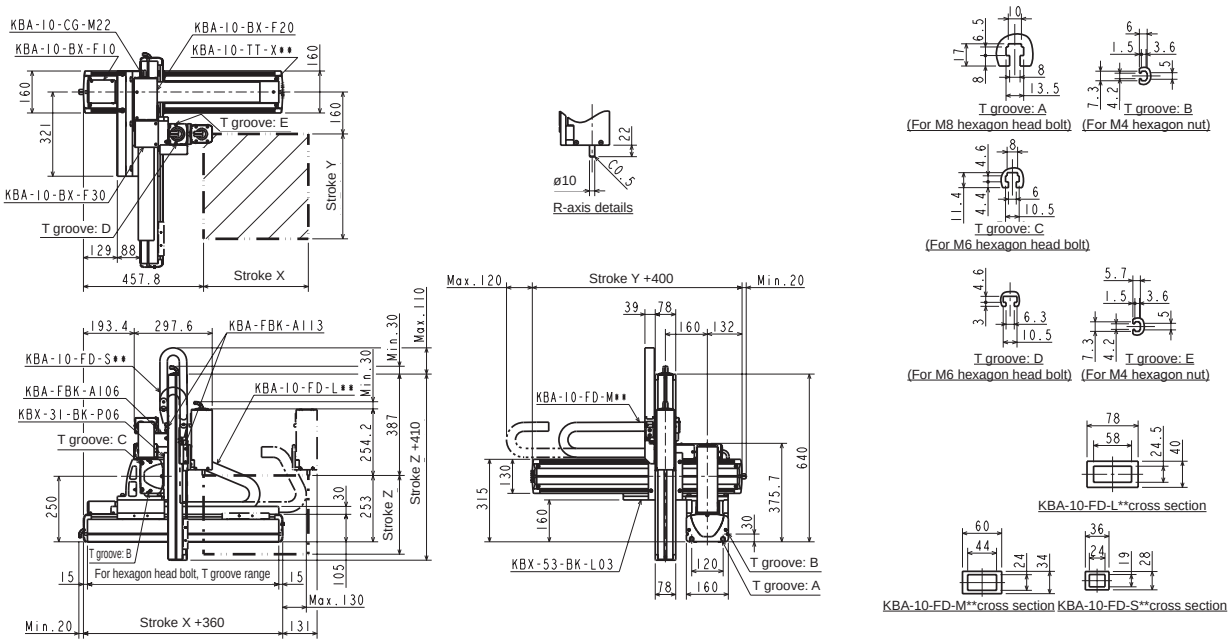

Orthogonal Axis Specifications: X-Y-Z-R Flexible Duct Specifications

Specifications

Item	X-axis	Y-axis	Z-axis	R-axis
Axis	KBX-50F-U□-M20N-□0	KBX-30F-ST-M20N-□0	KBX-10E-ST-M05B-□0	KBX-00D-RH-A
Stroke mm 100 mm units	200 to 1500	100 to 1000	100 to 300	360°
Max. speed mm/s	1200 (*1)	1200 (*1)	300	360°/s
Repeatability mm	±0.01	±0.01	±0.01	±0.025°
Ball screw lead mm	20	20	5	1/50 (reduction ratio)
Motor size W	200	200	With 100 brake	50

Acceleration/deceleration time to the max. speed setting: 0.36 sec or greater

Harmonic drive

X-axis: ball screw drive, motor wrap
Y-axis: ball screw drive, Straight motor axis
Z-axis: ball screw drive, motor axis straight
R-axis: Harmonic drive

(*1)For the following strokes, maximum speed varies

	Stroke (mm)	Max. speed (mm/s)
X-axis	700 to 800	1100
	900 to 1000	1000
	1100 to 1200	700
	1300	500
	1400	400
	1500	300
Y-axis	700	1000
	800	800
	900 to 1000	600

Max.workload (kg)		Y-axis stroke									
		100 mm	200 mm	300 mm	400 mm	500 mm	600 mm	700 mm	800 mm	900 mm	1000 mm
Z-axis Stroke	100 mm	5.0	5.0	5.0	5.0	5.0	5.0	5.0	5.0	5.0	3.0
	200 mm	5.0	5.0	5.0	5.0	5.0	5.0	5.0	5.0	5.0	2.0
	300 mm	5.0	5.0	5.0	5.0	5.0	5.0	5.0	5.0	4.0	1.0

Dimensions

R: Right-handed

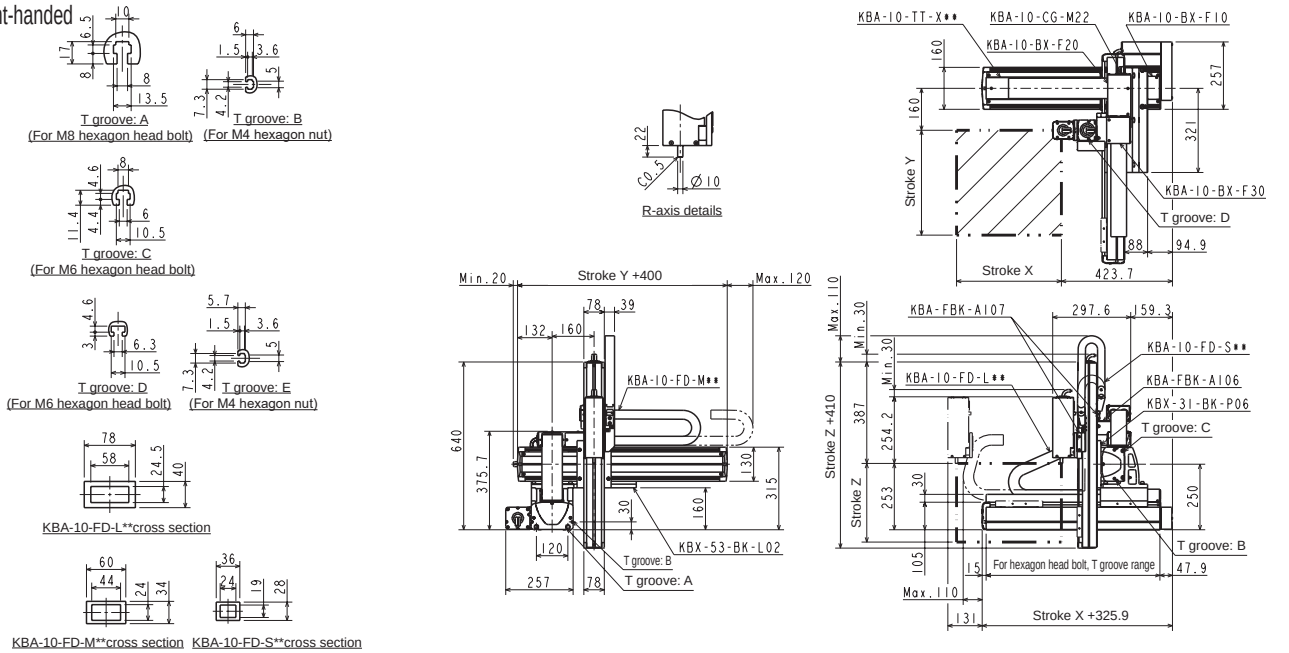

L: Left-handed

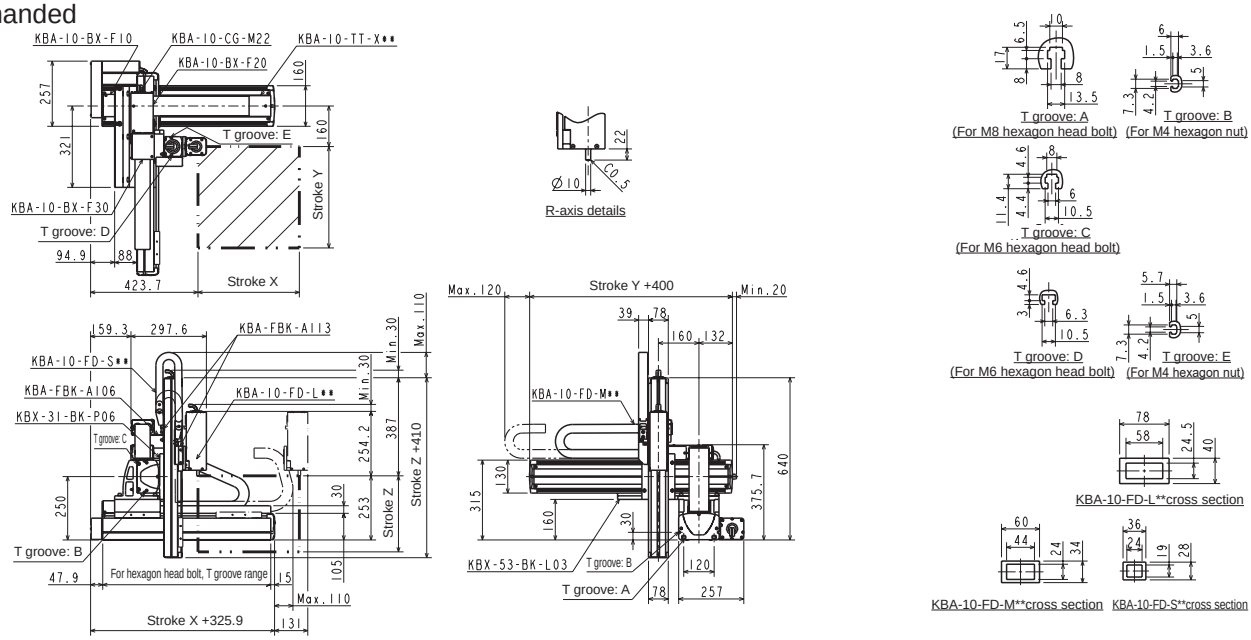

Orthogonal axis specifications: X-Y-Z-R flexible duct specifications

Specifications

Descriptions		X-axis	Y-axis	Z-axis	R-axis
Axis		KBX-50F-ST-M20N-□0	KBX-30E-ST-M20N-□5	KBX-10E-ST-M05B-□0	KBX-00D-RP-A
Stroke 100 mm units	mm	200 to 1600	150 to 1050	100 to 300	360°
Max. speed	mm/s	1200 (*1)	1200 (*1)	300	857°/s
Repeatability	mm	±0.01	±0.01	±0.01	±0.125°
Ball screw lead	mm	20	20	5	1/21 (reduction ratio)
Motor size	W	200	100	With 100 brake	50

Acceleration/deceleration time to the max. speed setting: 0.36 sec or greater

Planet gear

X-axis: ball screw drive, Straight motor axis
Y-axis: ball screw drive, Straight motor axis
Z-axis: ball screw drive, Straight motor axis
R-axis: Planet gear

(*1) For the following stroke, max. speed varies

	Stroke (mm)	Max. speed (mm/s)
X-axis	700 to 800	1100
	900 to 1000	1000
	1100 to 1200	700
	1300	500
	1400	400
	1500	300
	1600	300
Y-axis	750	1000
	850	800
	950 to 1050	600

Max. load capacity (kg)		Y-axis stroke									
		150 mm	250 mm	350 mm	450 mm	550 mm	650 mm	750 mm	850 mm	950 mm	1050 mm
Z-axis stroke	100 mm	8.0	8.0	8.0	8.0	8.0	8.0	8.0	7.0	5.0	3.0
	200 mm	6.0	6.0	6.0	6.0	6.0	6.0	6.0	6.0	4.0	2.0
	300 mm	5.0	5.0	5.0	5.0	5.0	5.0	5.0	5.0	4.0	1.0

Dimensions

R: Right-handed

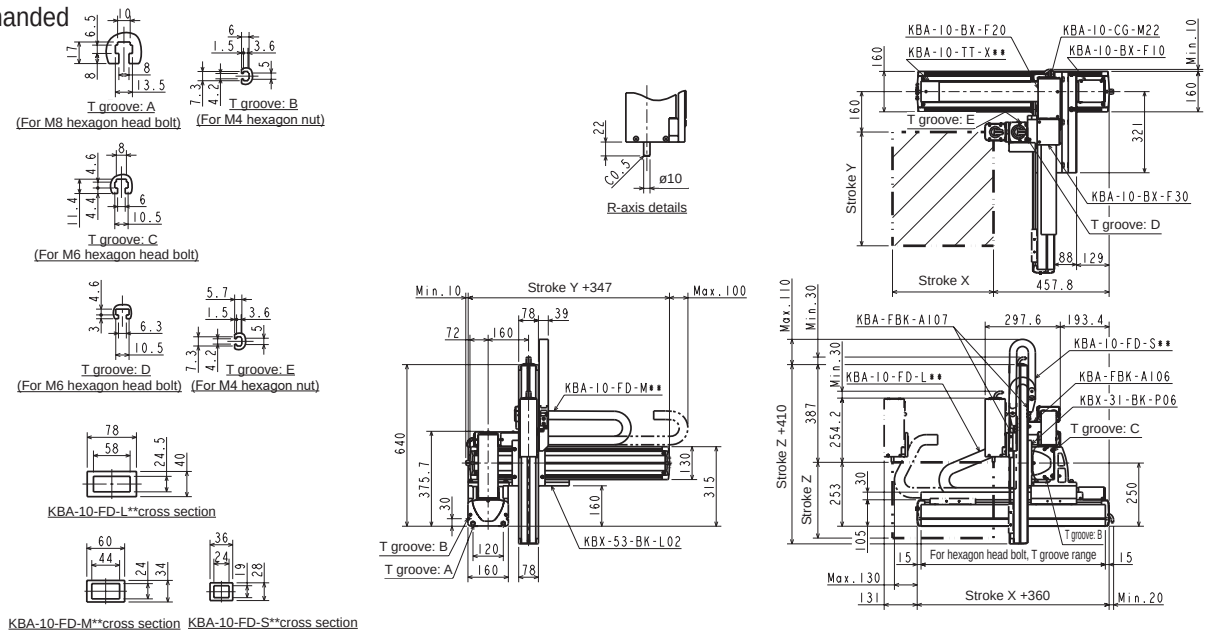

L: Left-handed

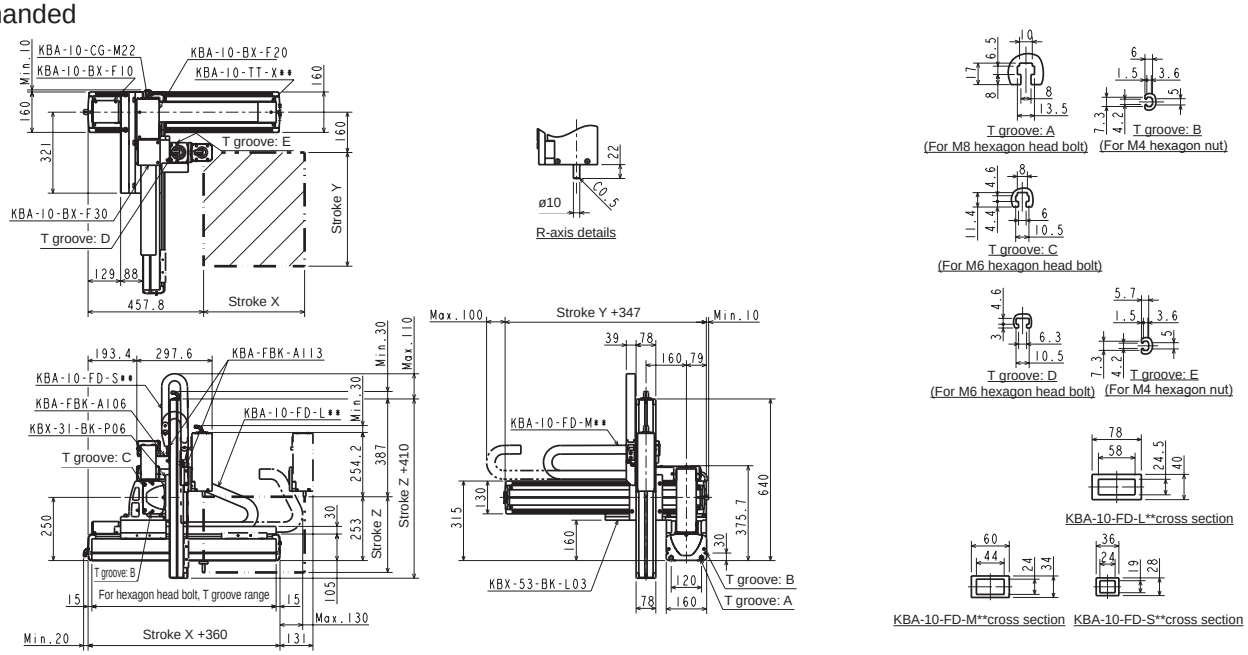

Orthogonal Axis Specifications: X-Y-Z-R Flexible Duct Specifications

Specifications

Item	X-axis	Y-axis	Z-axis	R-axis
Axis	KBX-50F-U□-M20N-□0	KBX-30E-ST-M20N-□5	KBX-10E-ST-M05B-□0	KBX-00D-RP-A
Stroke mm 100 mm units	200 to 1500	150 to 1050	100 to 300	360°
Max. speed mm/s	1200 (*1)	1200 (*1)	300	857°/s
Repeatability mm	±0.01	±0.01	±0.01	±0.125°
Ball screw lead mm	20	20	5	1/21 (reduction ratio)
Motor size W	200	100	With 100 brake	50

Acceleration/deceleration time to the max. speed setting: 0.36 sec or greater

Planet gear

X-axis: ball screw drive, motor wrap
Y-axis: ball screw drive, Straight motor axis
Z-axis: ball screw drive, motor axis straight
R-axis: Planet gear

(*1)For the following strokes, maximum speed varies

	Stroke (mm)	Max. speed (mm/s)
X-axis	700 to 800	1100
	900 to 1000	1000
	1100 to 1200	700
	1300	500
	1400	400
	1500	300
Y-axis	750	1000
	850	800
	950 to 1050	600

Max.workload (kg)		Y-axis stroke									
		150 mm	250 mm	350 mm	450 mm	550 mm	650 mm	750 mm	850 mm	950 mm	1050 mm
Z-axis Stroke	100 mm	8.0	8.0	8.0	8.0	8.0	8.0	8.0	7.0	5.0	3.0
	200 mm	6.0	6.0	6.0	6.0	6.0	6.0	6.0	6.0	4.0	2.0
	300 mm	5.0	5.0	5.0	5.0	5.0	5.0	5.0	5.0	4.0	1.0

Dimensions

R: Right-handed

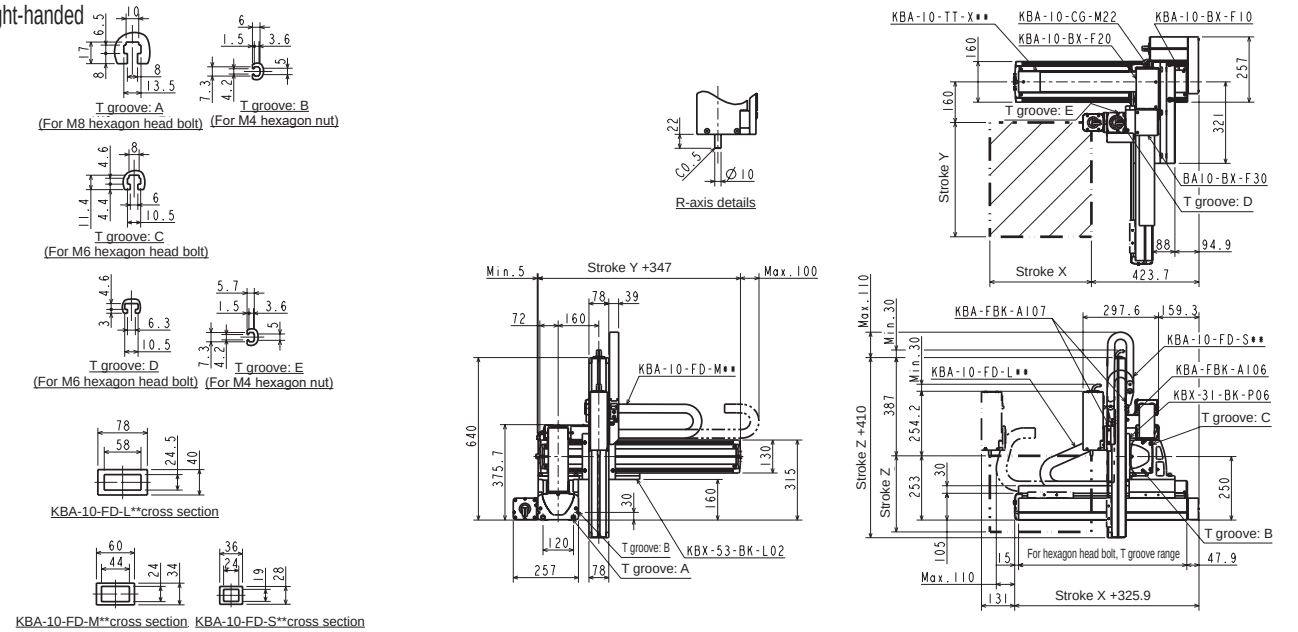

L: Left-handed

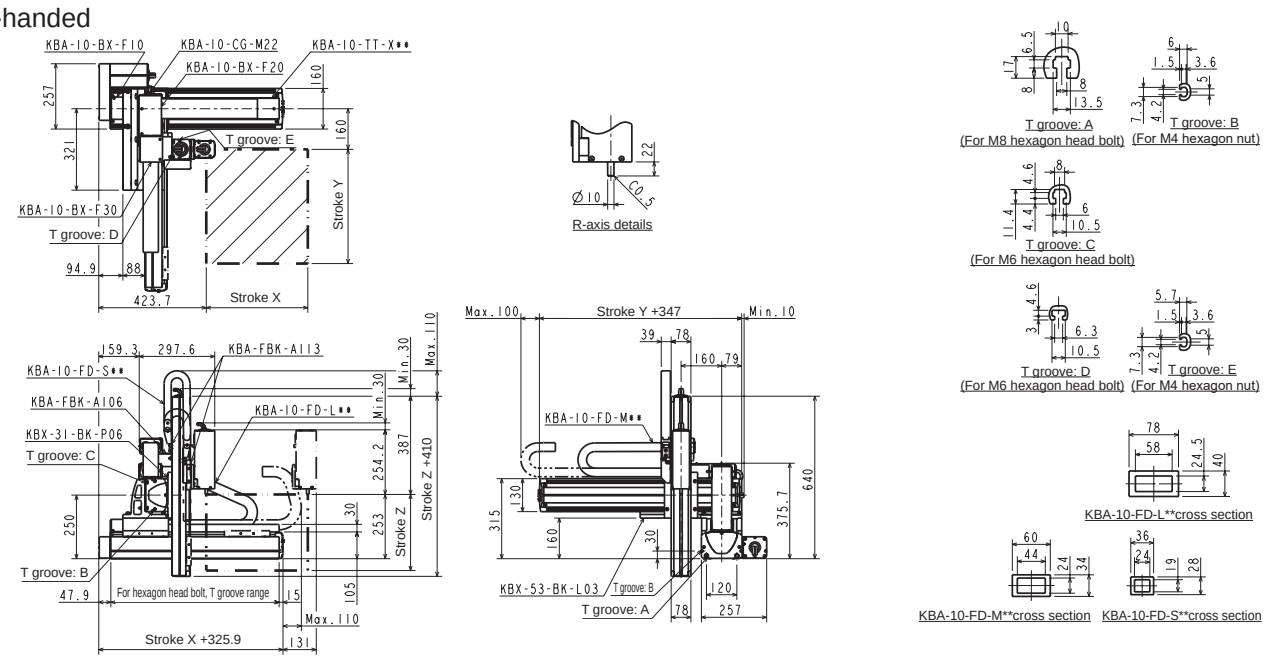

Orthogonal axis specifications: X-Y-Z-R flexible duct specifications

Specifications

Descriptions	X-axis	Y-axis	Z-axis	R-axis
Axis	KBX-50F-ST-M20N-□0	KBX-30F-ST-M20N-□0	KBX-10E-ST-M05B-□0	KBX-00D-RP-A
Stroke mm 100 mm units	200 to 1600	100 to 1000	100 to 300	360°
Max. speed mm/s	1200 (*1)	1200 (*1)	300	857°/s
Repeatability mm	±0.01	±0.01	±0.01	±0.125°
Ball screw lead mm	20	20	5	1/21 (reduction ratio)
Motor size W	200	200	With 100 brake	50

Acceleration/deceleration time to the max. speed setting: 0.36 sec or greater

Planet gear

X-axis: ball screw drive, Straight motor axis
Y-axis: ball screw drive, Straight motor axis
Z-axis: ball screw drive, Straight motor axis
R-axis: Planet gear

(*1) For the following stroke, max. speed varies

	Stroke (mm)	Max. speed (mm/s)
X-axis	700 to 800	1100
	900 to 1000	1000
	1100 to 1200	700
	1300	500
	1400	400
	1500	300
	1600	300
Y-axis	700	1000
	800	800
	900 to 1000	600

Max. load capacity (kg)		Y-axis stroke									
		100 mm	200 mm	300 mm	400 mm	500 mm	600 mm	700 mm	800 mm	900 mm	1000 mm
Z-axis stroke	100 mm	10.0	10.0	10.0	10.0	10.0	10.0	10.0	8.0	5.0	3.0
	200 mm	10.0	10.0	10.0	10.0	10.0	10.0	10.0	7.0	5.0	2.0
	300 mm	10.0	10.0	10.0	10.0	10.0	10.0	10.0	7.0	4.0	2.0

Dimensions

R: Right-handed

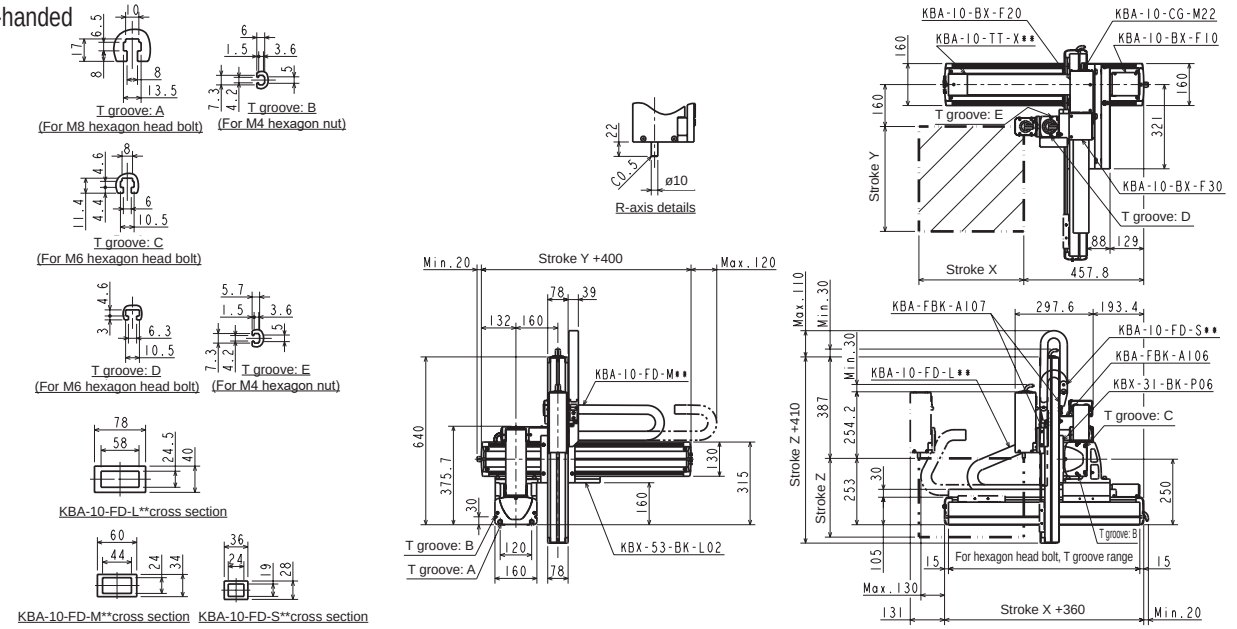

L: Left-handed

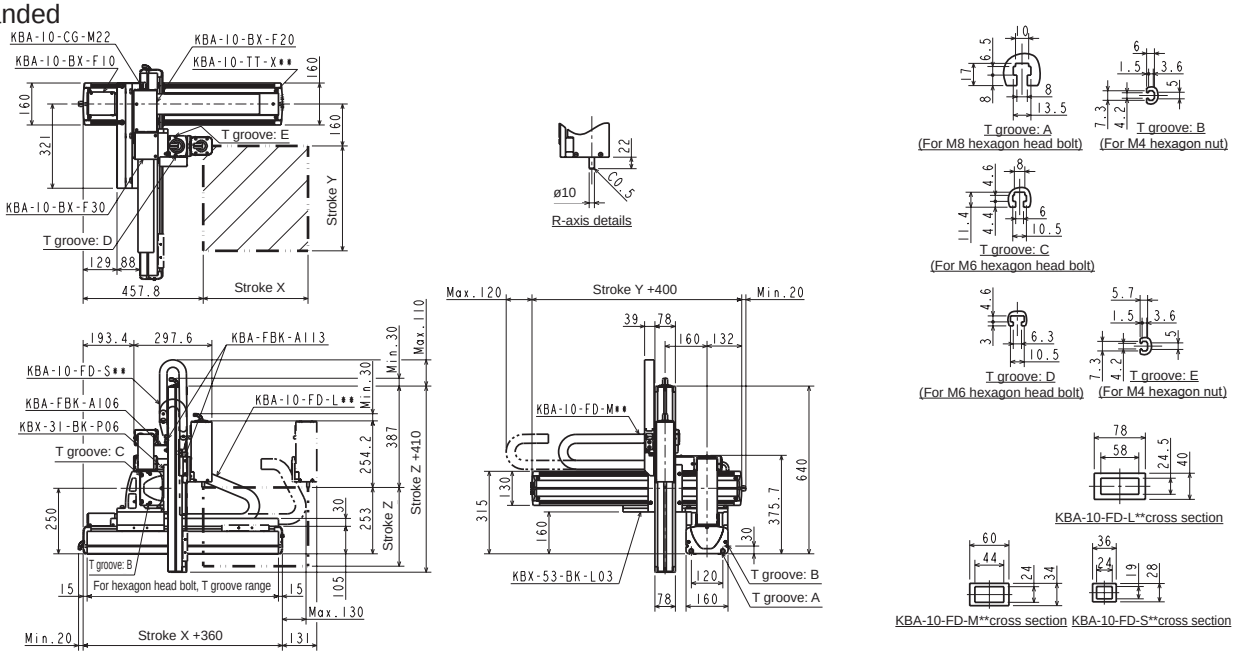

Orthogonal Axis Specifications: X-Y-Z-R Flexible Duct Specifications

Specifications

Item	X-axis	Y-axis	Z-axis	R-axis
Axis	KBX-50F-U□-M20N-□0	KBX-30F-ST-M20N-□0	KBX-10E-ST-M05B-□0	KBX-00D-RP-A
Stroke mm 100 mm units	200 to 1500	100 to 1000	100 to 300	360°
Max. speed mm/s	1200 (*1)	1200 (*1)	300	857°/s
Repeatability mm	±0.01	±0.01	±0.01	±0.125°
Ball screw lead mm	20	20	5	1/21 (reduction ratio)
Motor size W	200	200	With 100 brake	50

Acceleration/deceleration time to the max. speed setting: 0.36 sec or greater

Planet gear

X-axis: ball screw drive, motor wrap
Y-axis: ball screw drive, Straight motor axis
Z-axis: ball screw drive, motor axis straight
R-axis: Planet gear

(*1)For the following strokes, maximum speed varies

	Stroke (mm)	Max. speed (mm/s)
X-axis	700 to 800	1100
	900 to 1000	1000
	1100 to 1200	700
	1300	500
	1400	400
	1500	300
Y-axis	700	1000
	800	800
	900 to 1000	600

Max.workload (kg)		Y-axis stroke									
		100 mm	200 mm	300 mm	400 mm	500 mm	600 mm	700 mm	800 mm	900 mm	1000 mm
Z-axis Stroke	100 mm	10.0	10.0	10.0	10.0	10.0	10.0	10.0	8.0	5.0	3.0
	200 mm	10.0	10.0	10.0	10.0	10.0	10.0	10.0	7.0	5.0	2.0
	300 mm	10.0	10.0	10.0	10.0	10.0	10.0	10.0	7.0	4.0	2.0

Dimensions

R: Right-handed

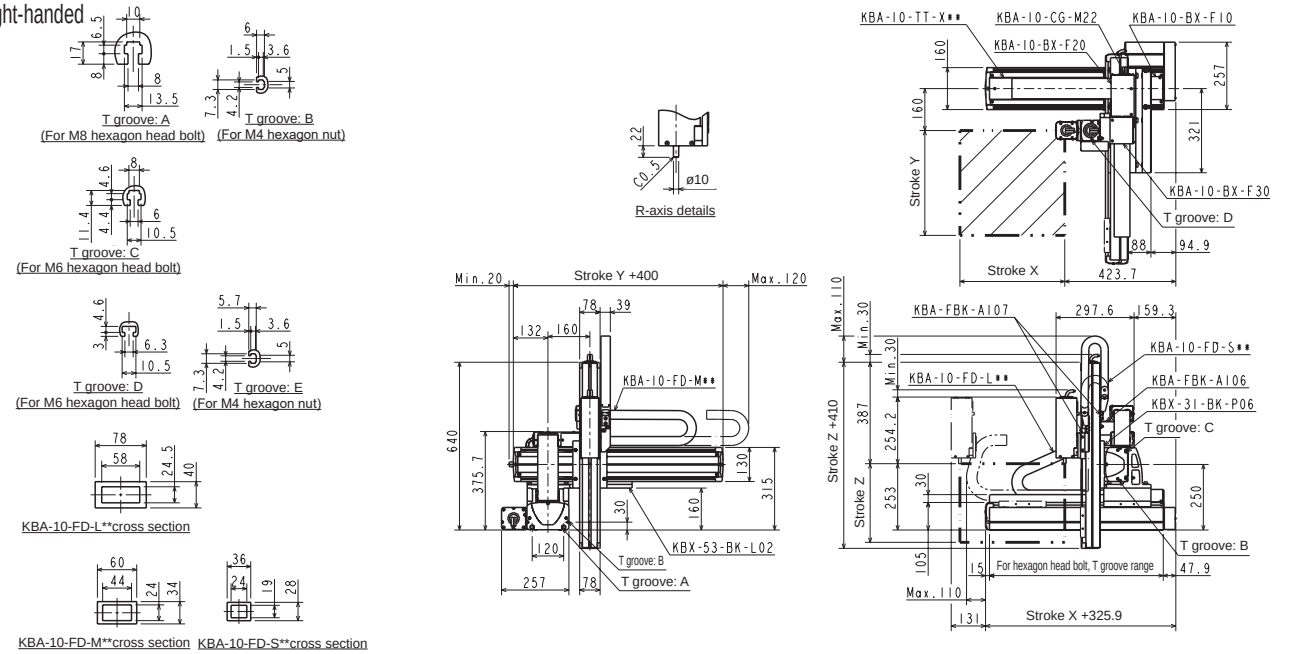

L: Left-handed

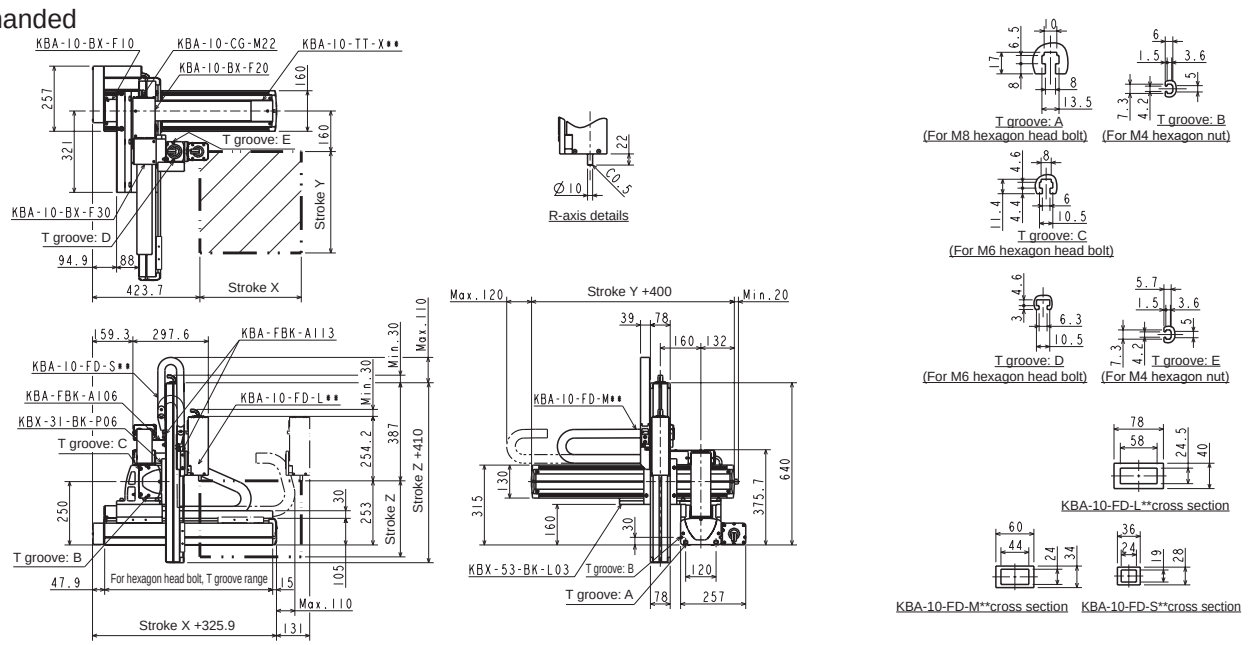

Axis-related specifications

Configuration parts

Optional products

How to order axes (combination bracket)

KBX - T7T5 - BK - L 02

- Ⓐ Axis combination
- Ⓑ Bracket models
- Ⓒ Combination models

Code	Content
Ⓐ Axis combination	
T7T5	KBX-T7 axis and KBX-T5 axis combination
1T5	KBX-10 axis and KBX-T5 axis combination
1T7	KBX-10 axis and KBX-T7 axis combination
10	KBX-10 axis and KBX-10 axis combination
11	KBX-10 axis and KBX-10 axis combination
31	KBX-30 axis and KBX-10 axis combination
53	KBX-50 axis and KBX-30 axis combination
33	KBX-30 axis and KBX-30 axis combination
55	KBX-50 axis and KBX-50 axis combination
65	KBX-60 axis and KBX-50 axis combination
Ⓑ Bracket models	
L	L bracket
P	Plate bracket
Ⓒ Combination models	
01	Next page figure (6)
02	Next page figure (1)
03	Next page figure (2)
04	Next page figure (5)
05	Next page figure (7)
06	Next page figure (3)
06S	Next page figure (3)
07	Next page figure (4)

[Example of model No.]

KBX-10-BK-L02

Ⓐ Axis combination : KBX-10 and KBX-10 combination
Ⓑ Bracket model : L bracket
Ⓒ Combination models : Following figure (1)

Combination table for [A] axis combination to [C] other combination models

[B] Bracket model	[C] Other combination models	[A] Axis combination									
		T7T5	1T5	1T7	10	11	31	53	33	55	65
L	01	-	-	-	-	○	○	○	○	○	-
	02	○	○	○	○	-	○	○	○	○	○
	03	○	○	○	○	-	○	○	○	○	○
	04	-	-	-	○	-	-	-	-	-	-
	05	-	-	-	○	-	-	-	-	-	-
P	06	○	○	○	○	-	○	○	-	-	-
	06S	-	-	○	-	-	-	-	-	-	-
	07	-	-	-	○	-	○	○	-	-	-

Ⓒ Combination models

Combination model (1) ..... code: "02"

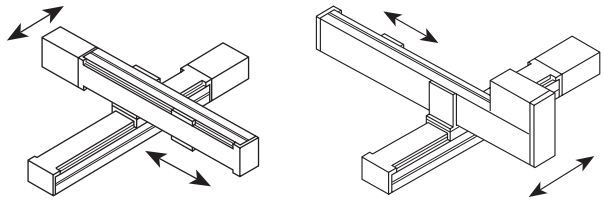

X-Y right side
Y-axis slider opposite to motor side

X-Y left side
Y-axis slider motor side

Combination model (2) ..... code: "03"

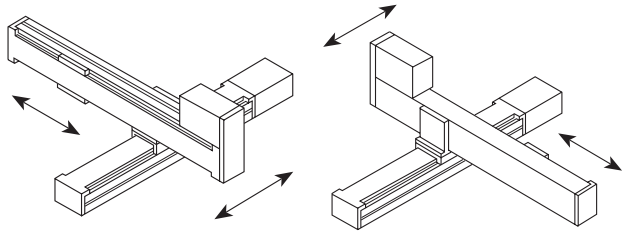

X-Y left side
Y-axis slider opposite to motor side

X-Y right side
Y-axis slider motor side

Combination model (3) ..... code: "06"

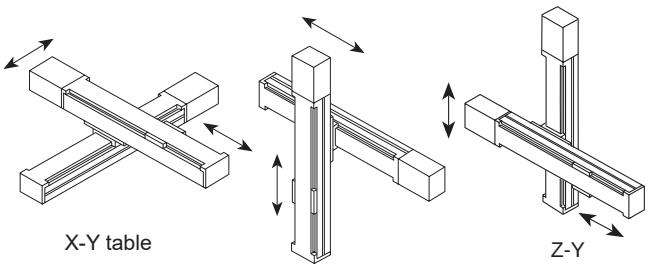

X-Y table

Y-Z

Z-Y

Combination model (4) ..... code: "07"

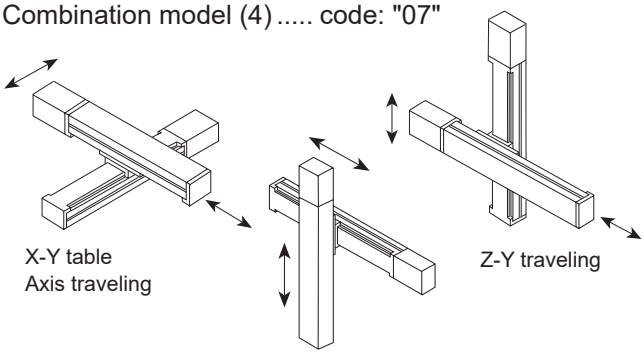

X-Y table
Axis traveling

Z-Y traveling

Y-Z traveling

Combination model (5) ..... code: "04"

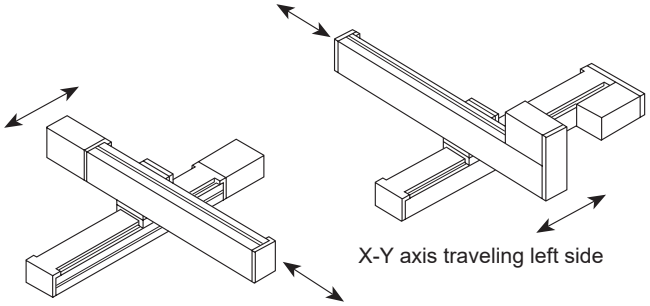

X-Y axis traveling left side

X-Y axis traveling right side

Combination model (6) ..... code: "01"

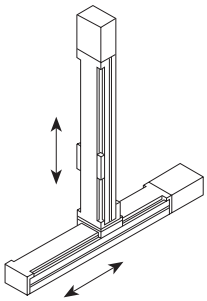

X-Z

Combination model (7) ..... code: "05"

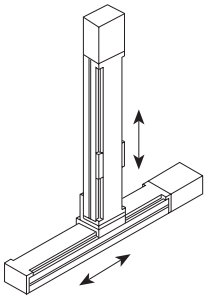

X-Z Z-axis lateral facing

Other combination models

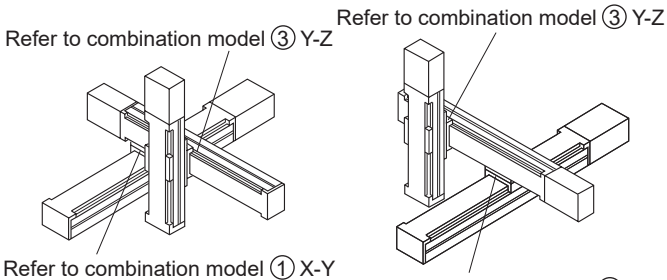

Refer to combination model ① X-Y
X-Y-Z right side
Y-axis slider opposite to motor side

Refer to combination model ② X-Y
X-Y-Z left side
Y-axis slider opposite to motor side

Axis combination brackets Dimensions

[KBX-11-BK-L01] Material: aluminum alloy, weight: 1.8 kg

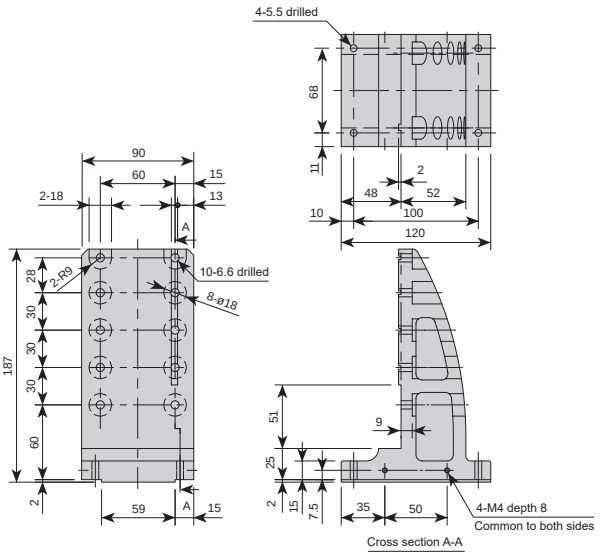

[KBX-31-BK-L01] Material: aluminum alloy, weight: 2.1 kg

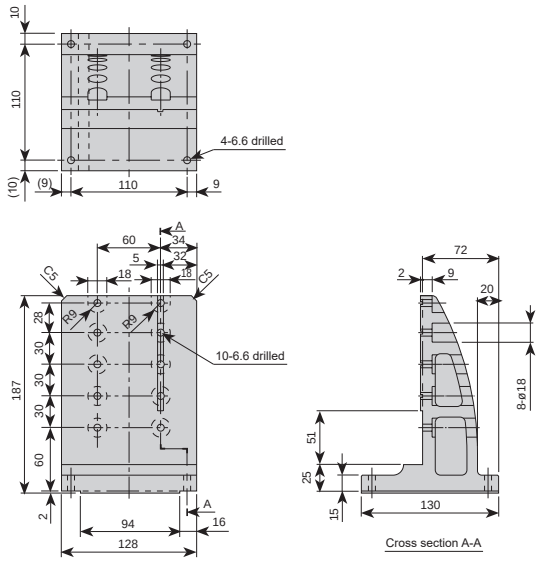

[KBX-53-BK-L01] Material: aluminum alloy, weight: 4.5 kg

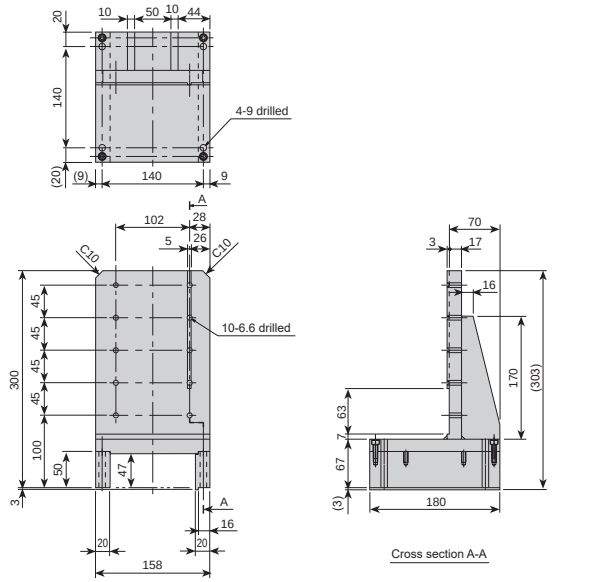

[KBX-33-BK-L01] Material: aluminum alloy, weight: 2.1 kg

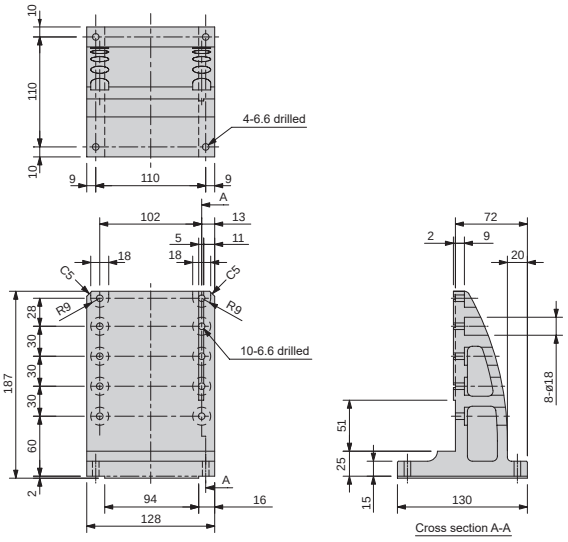

[KBX-55-BK-L01] Material: aluminum alloy, weight: 5.0 kg

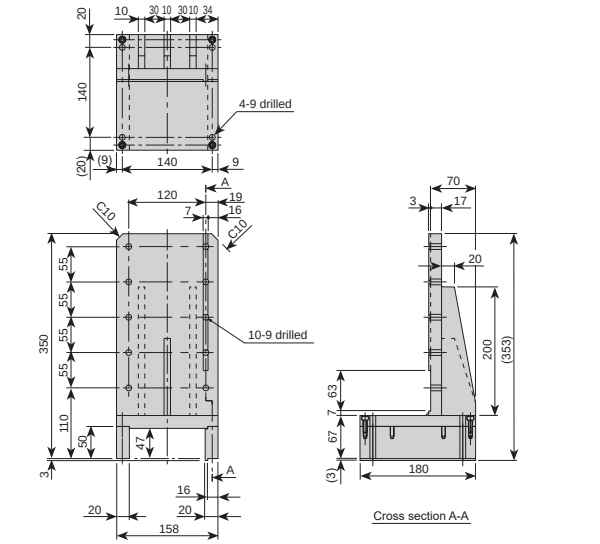

[KBX-T7T5-BK-L02] Material: aluminum alloy, weight: 0.5 kg

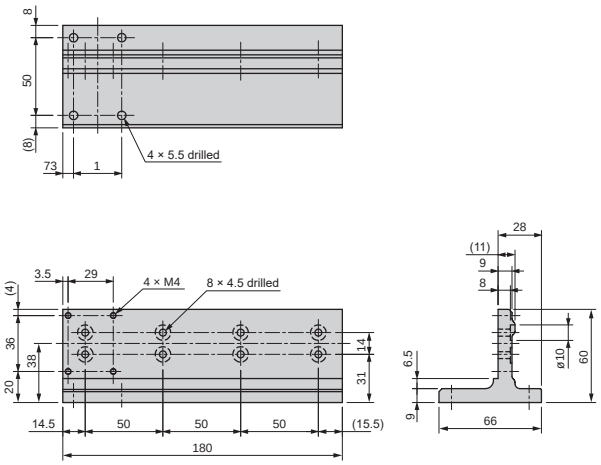

Axis combination brackets Dimensions

[KBX-1T5-BK-L02] Material: aluminum alloy, weight: 0.8 kg

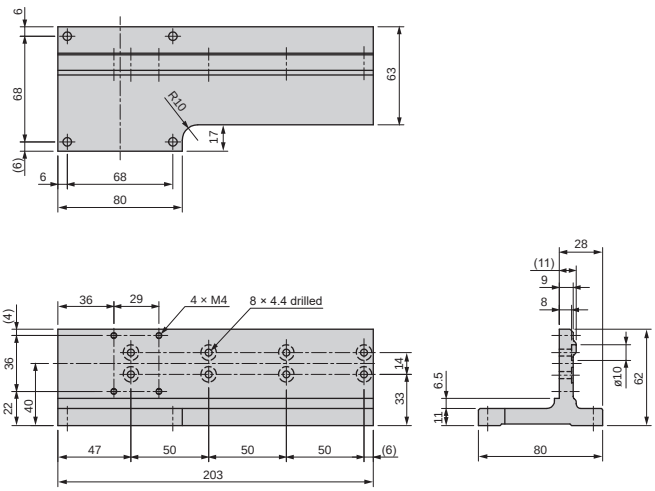

[KBX-1T7-BK-L02] Material: aluminum alloy, weight: 0.8 kg

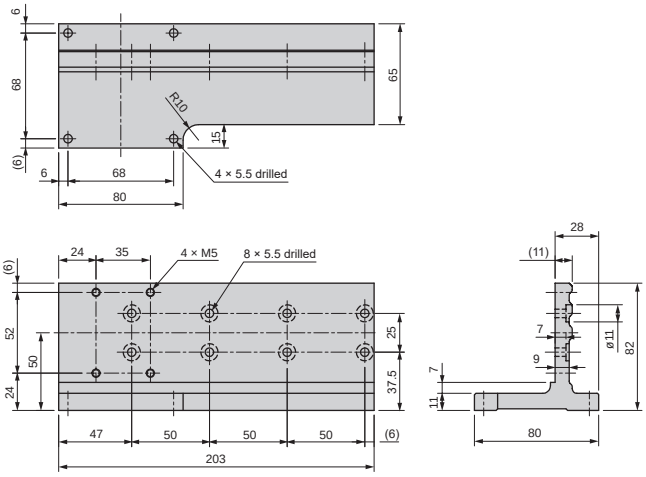

[KBX-10-BK-L02] Material: aluminum alloy, weight: 0.9 kg

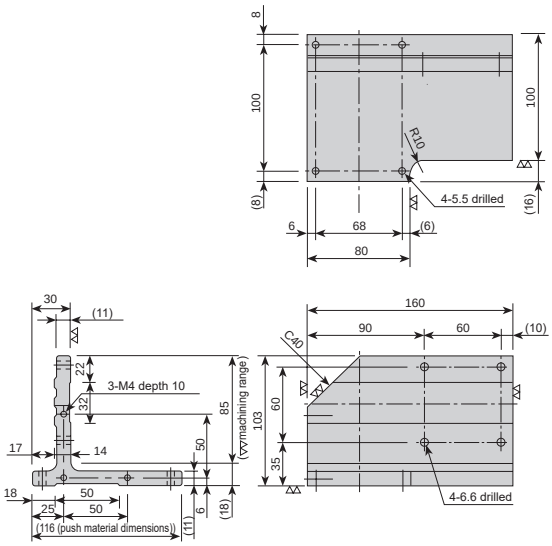

[KBX-31-BK-L02] Material: aluminum alloy, weight: 1.9 kg

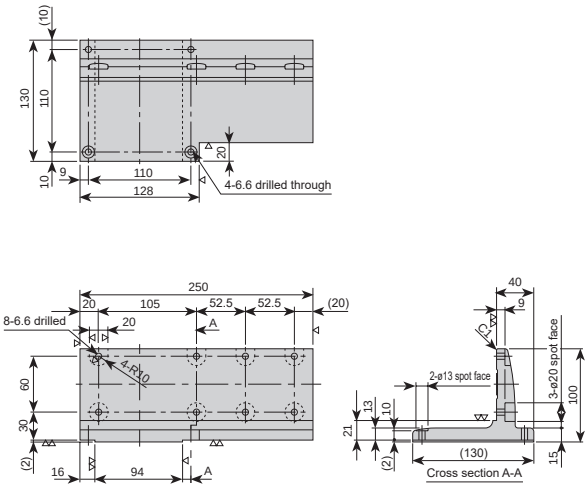

[KBX-53-BK-L02] Material: aluminum alloy, weight: 8.5 kg

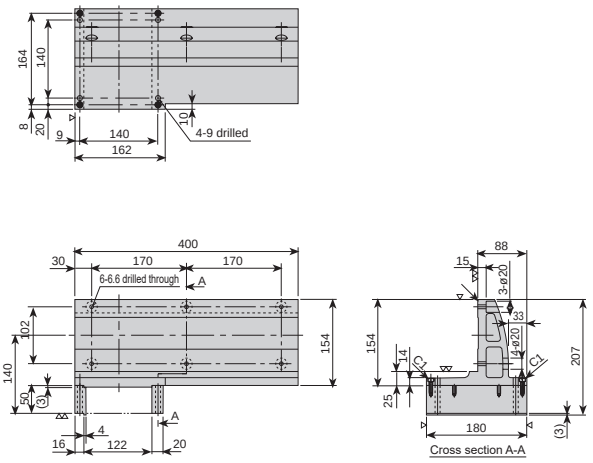

[KBX-33-BK-L02] Material: aluminum alloy, weight: 5.9 kg

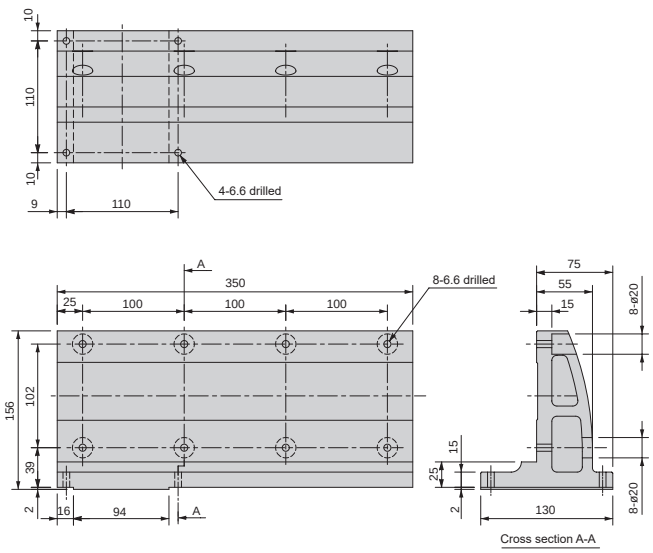

Axis combination brackets Dimensions

[KBX-55-BK-L02] Material: aluminum alloy, weight: 10 kg

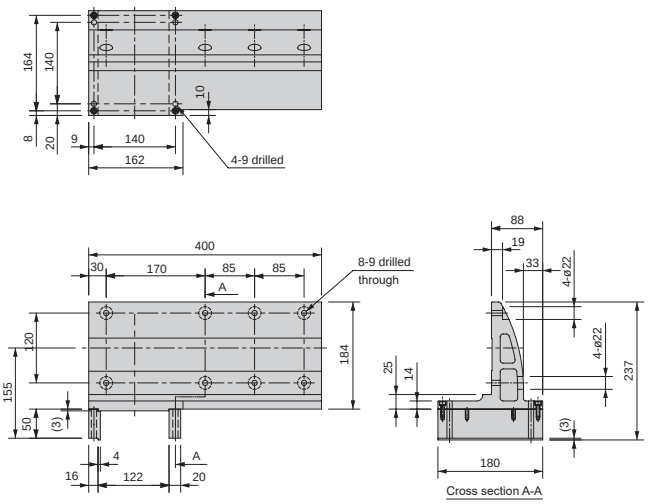

[KBX-65-BK-L02] Material: aluminum alloy, weight: 12.5 kg

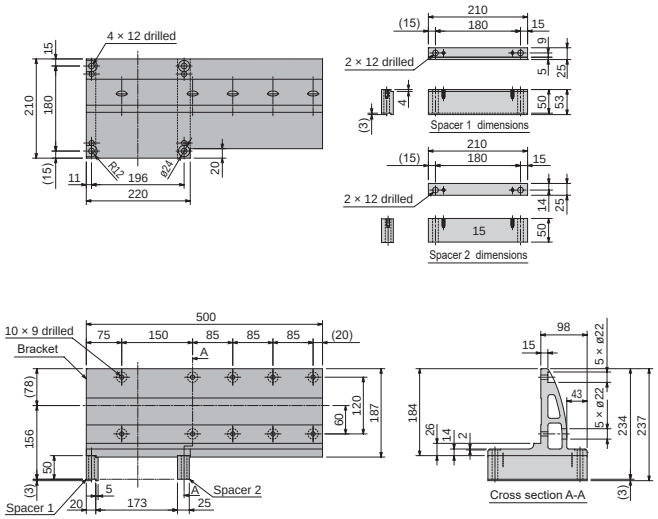

[KBX-T7T5-BK-L03] Material: aluminum alloy, weight: 0.5 kg

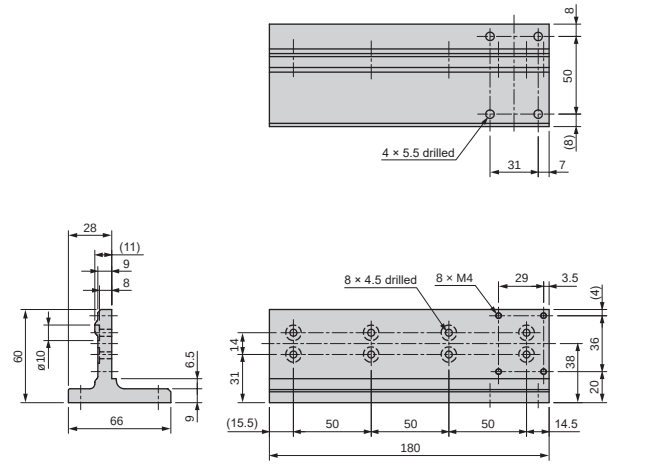

[KBX-1T5-BK-L03] Material: aluminum alloy, weight: 0.8 kg

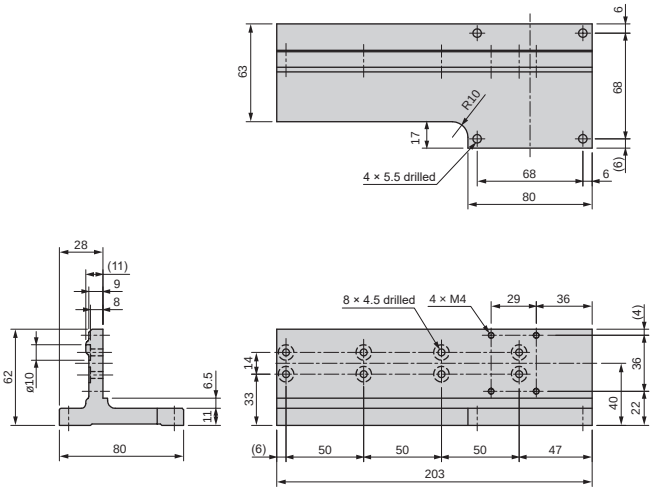

[KBX-1T7-BK-L03] Material: aluminum alloy, weight: 0.8 kg

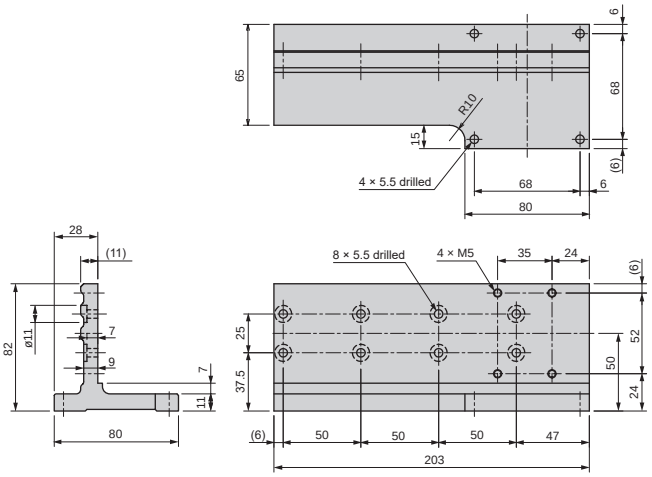

[KBX-10-BK-L03] Material: aluminum alloy, weight: 0.9 kg

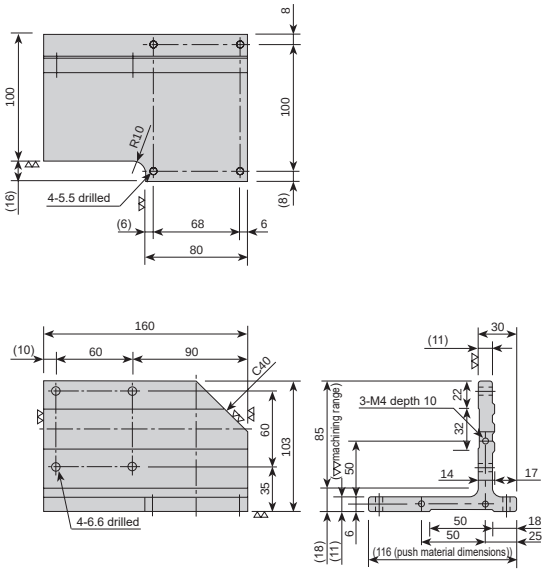

Axis combination brackets Dimensions

[KBX-31-BK-L03] Material: aluminum alloy, weight: 1.9 kg

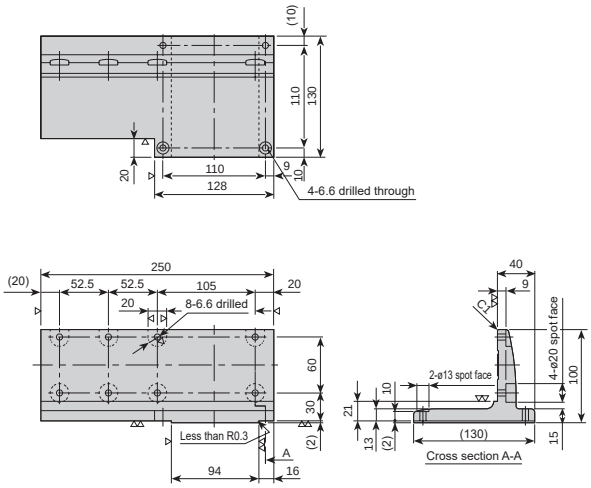

[KBX-53-BK-L03] Material: aluminum alloy, weight: 8.5 kg

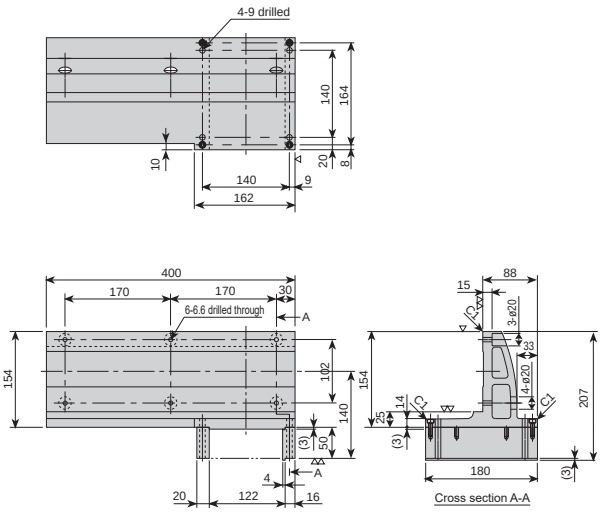

[KBX-33-BK-L03] Material: aluminum alloy, weight: 5.9 kg

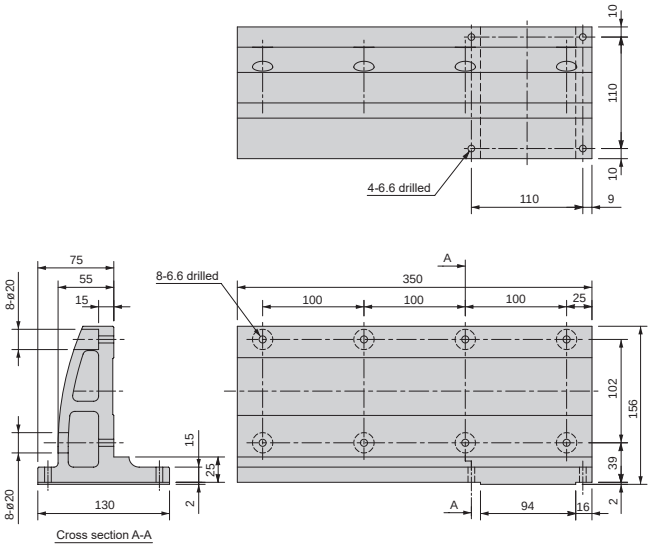

[KBX-55-BK-L03] Material: aluminum alloy, weight: 10 kg

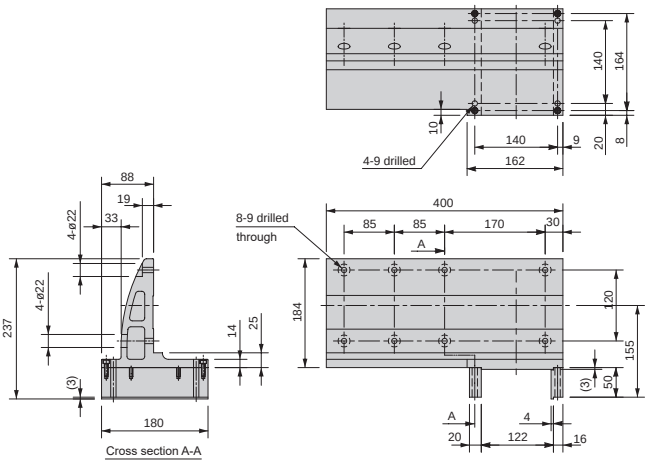

[KBX-65-BK-L03] Material: aluminum alloy, weight: 12.5 kg

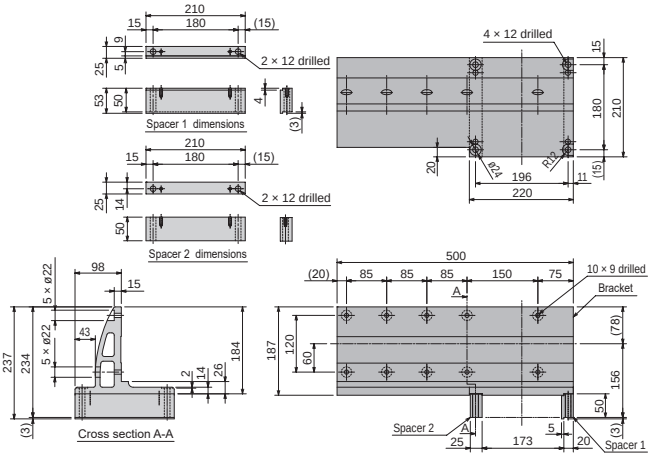

[KBX-10-BK-L04] Material: aluminum alloy, weight: 0.7 kg

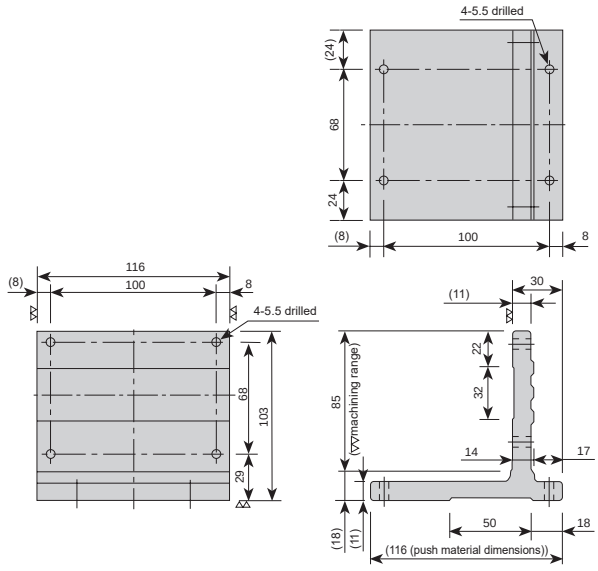

Axis combination brackets Dimensions

[KBX-10-BK-L05] Material: aluminum alloy, weight: 0.7 kg

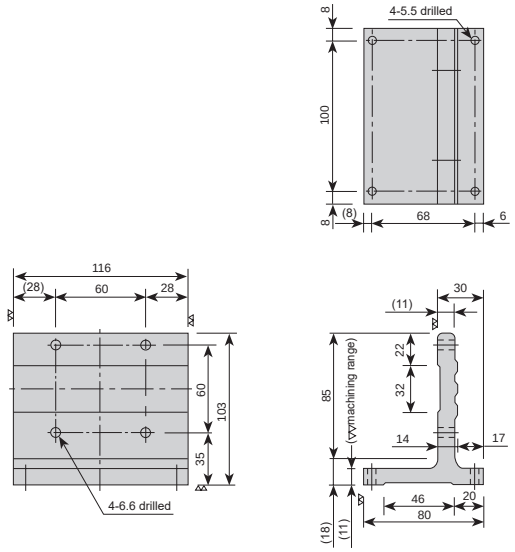

[KBX-T7T5-BK-P06] Material: aluminum alloy, weight: 0.3 kg

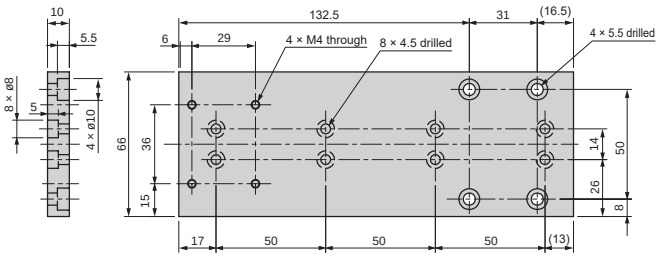

[KBX-1T5-BK-P06] Material: aluminum alloy, weight: 0.5 kg

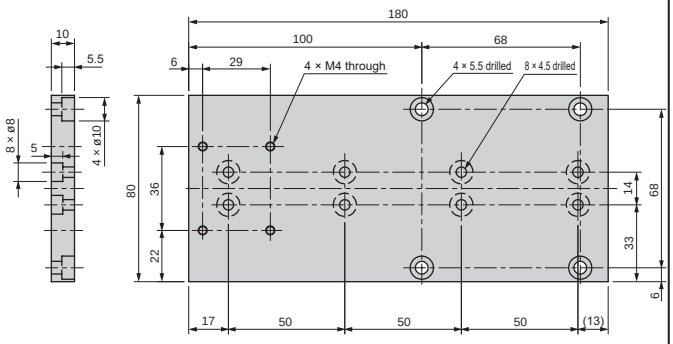

[KBX-1T7-BK-P06] Material: aluminum alloy, weight: 0.5 kg

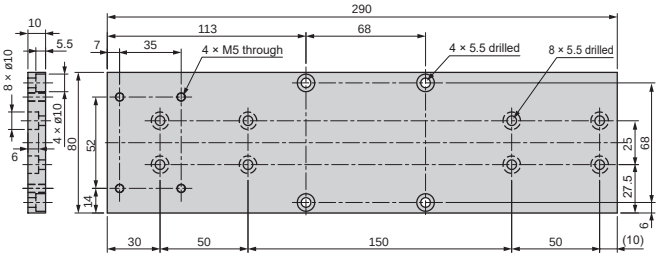

* For 2nd axis stroke: 150 mm or more

[KBX-10-BK-P06] Material: aluminum alloy, weight: 0.6 kg

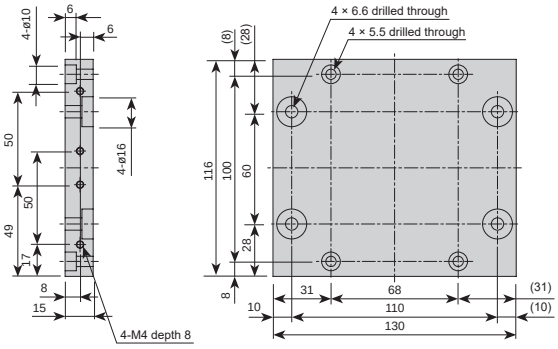

[KBX-31-BK-P06] Material: aluminum alloy, weight: 0.9 kg

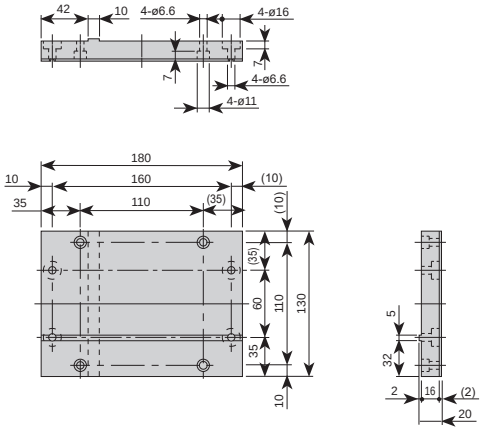

Axis combination brackets Dimensions

[KBX-53-BK-P06] Material: aluminum alloy, weight: 1.5 kg

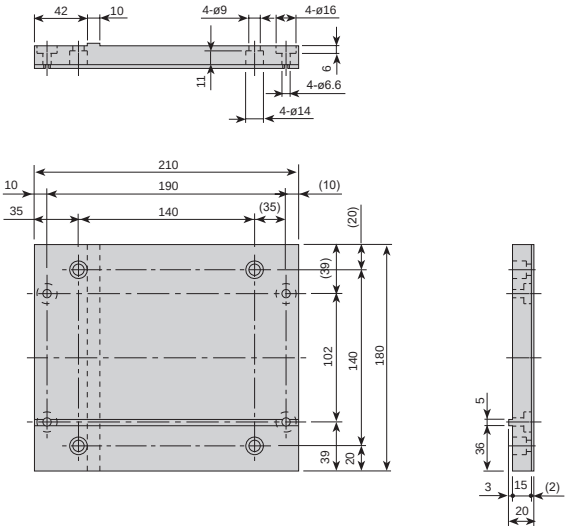

[KBX-1T7-BK-P06S] Material: aluminum alloy, weight: 0.5 kg

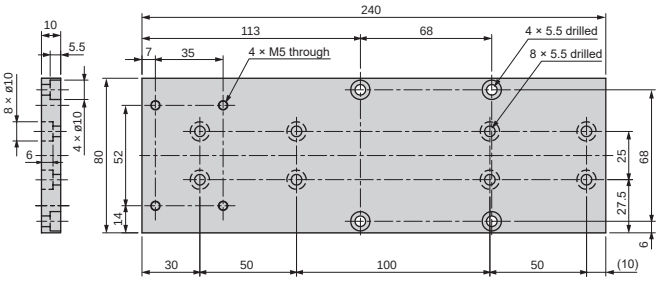

* For 2nd axis stroke: 100 mm or more

[KBX-10-BK-P07] Material: aluminum alloy, weight: 0.5 kg

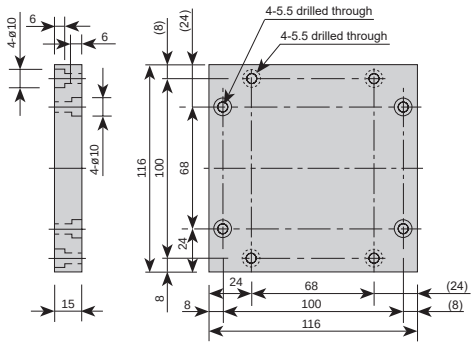

[KBX-31-BK-P07] Material: aluminum alloy, weight: 0.7 kg

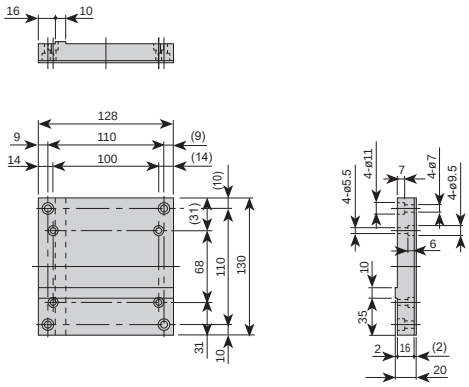

[KBX-53-BK-P07] Material: aluminum alloy, weight: 1.3 kg

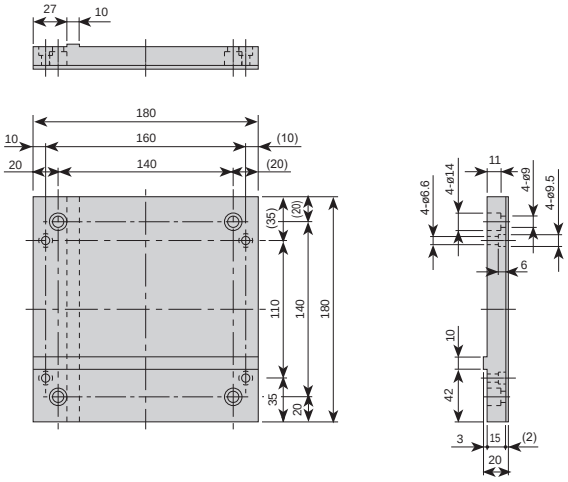

Controller cable

[Applications]

Cable to connect the shaft body to the controller. It contains both power lines and encoder signal lines, and is formed from two bend resistant cables.
For use with an orthogonal 2-axis the cable length of the second axis should generally be 2 meters longer than the cable of first axis.
This is a dedicated cable for the shaft body. There is no user cable included.

[How to order]

KBX - 10 - CC - M 30

Ⓐ Cable length

Code	Content
Ⓐ Cable length	
30	3000 mm
50	5000 mm
70	7000 mm
90	9000 mm
B0	11000 mm
D0	13000 mm

* The controller cable is a set made from one motor line and one encoder line.
  This cable comes with a cable grip for two wires.
* For use with an orthogonal 2-axis, wiring to the second axis should be passed through a flexible tube or flexible duct (ordered separately).
* Contact a dealer or CKD for cable that exceeds 13 meters in length.
* Contact a dealer or CKD for high bend resistant robot cable.

[Dimensions]

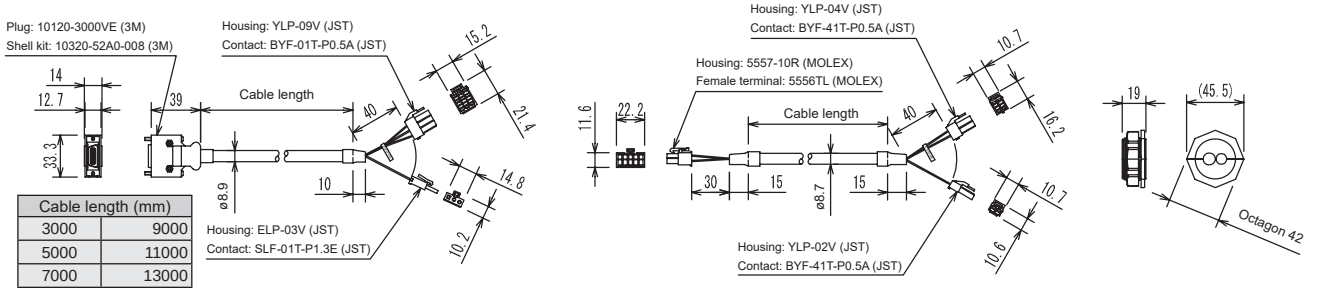

Cable length (mm)	
3000	9000
5000	11000
7000	13000

CN box

[Applications]

Used to fix the tube and duct when mounting the flexible tube and flexible duct. Use the T grooves on the shaft body, the top of the frame cover, and the motor cover to fix when mounting.
In addition to the shaft body, the CN box can also be mounted to the user's equipment.
When used with a single axis, connection is possible without the CN box.

[How to order]

KBA - 10 - BX - B20

CN box Ⓐ Models

* Use the dedicated wrench "KBA-CGSP-41" to tighten the resin nuts of the cable grip to the CN box and shaft body.

Code	Content	
Ⓐ Models		
B10	For flexible tube	For 1st and 2nd axes
B20		For 1st and 2nd axes
B30		For 3-axis basic axis
F10	For flexible duct	For basic axis
F20		For 3-axis 2nd axis
F30		For final axis

* The CN box comes with caps, mounting brackets, grommets, cable fixing brackets and other parts necessary for mounting.
* The controller cable only passes through the box, it does not relay with the connector.
* The CN box can be ordered in quantities of one unit and up.
* For use with a combination axis, use a mounting bracket (KBA-FBK-* sold separately). Contact CKD for details.

[Dimensions]

[KBA-10-BX-B10] flexible tube M size (KBA-10-FT-M□□) dedicated

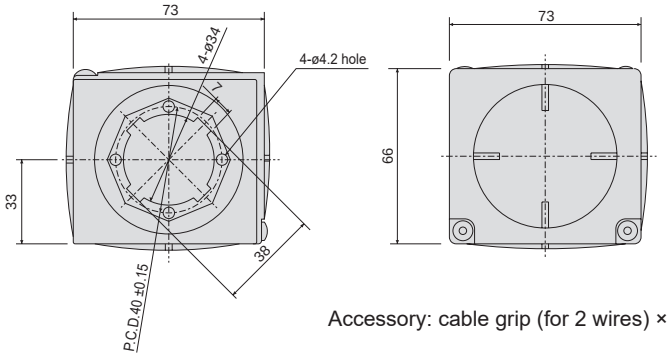

Material: (box) aluminum
(cap) ABS resin

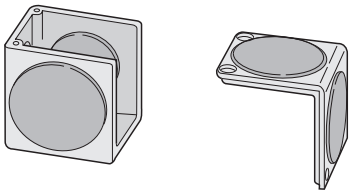

Accessory: cable grip (for 2 wires) × 2

[Dimensions]

[KBA-10-BX-B20] flexible tube L size (KBA-10-FT-L□□) dedicated

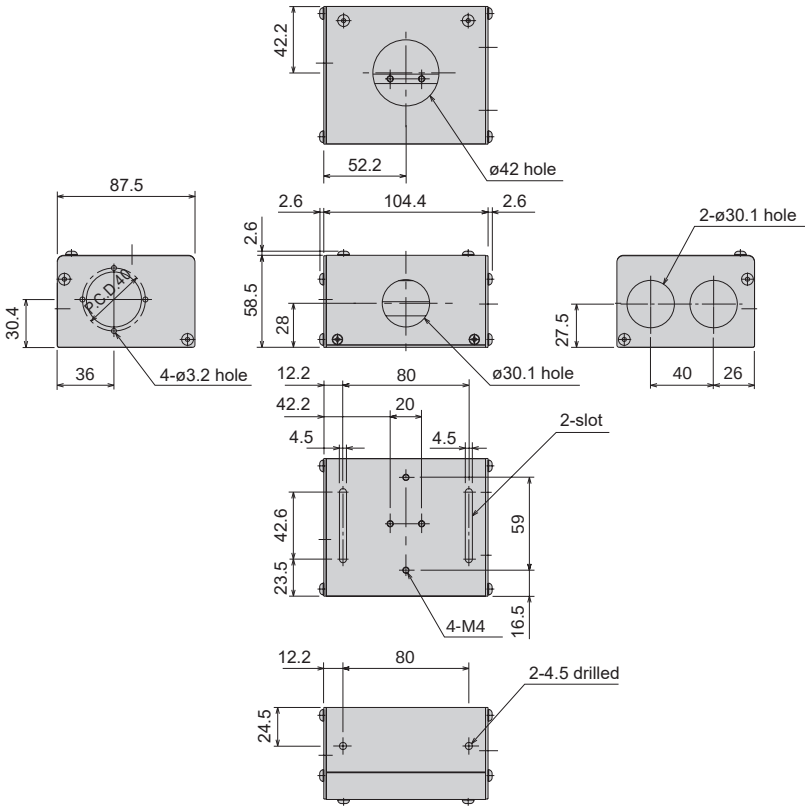

No.	Accessory		Quantity
1	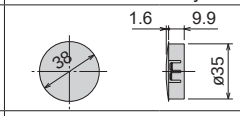		1
2	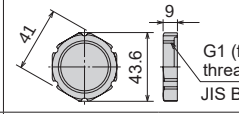	G1 (female thread) JIS B 0202	1
3	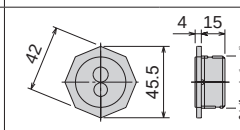		1 set
4	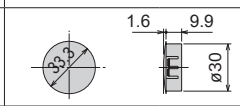		3
5	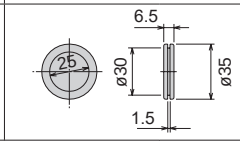		3
6	Cross-recessed pan head screw	M4 × 8	2
7	Hexagon nut	M4	2

[KBA-10-BX-B30] flexible tube L size (KBA-10-FT-L□□) dedicated

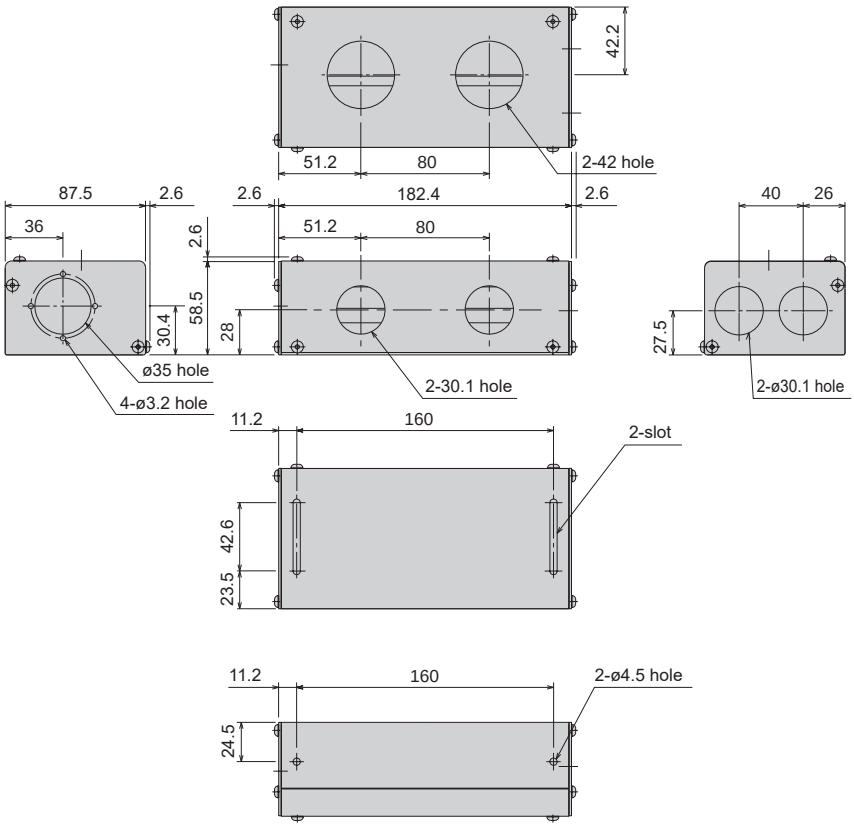

No.	Accessory		Quantity
1	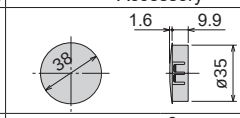		1
2	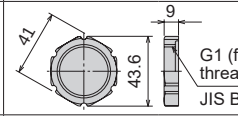	G1 (female thread) JIS B 0202	1
3	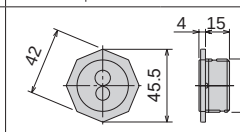		1 set
4	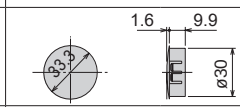		4
5	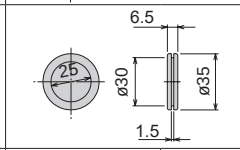		4
6	Cross-recessed pan head screw	M4 × 8	2
7	Hexagon nut	M4	2

[Dimensions]

[KBA-10-BX-F10] flexible duct (KBA-10-FD-□□□) dedicated

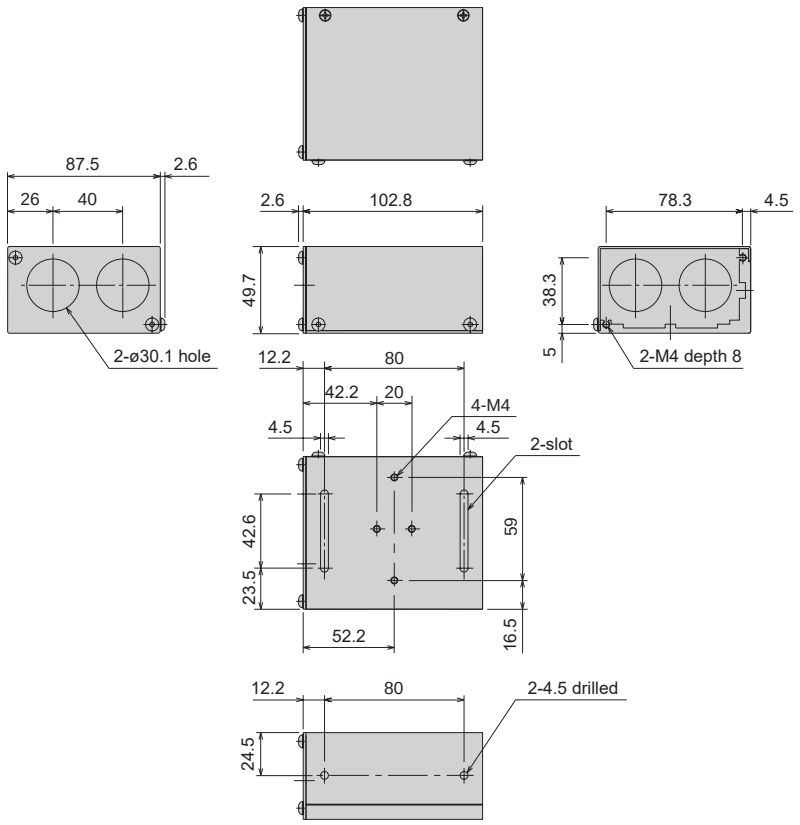

No.	Accessory		Quantity
1	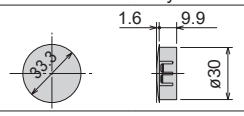		1
2	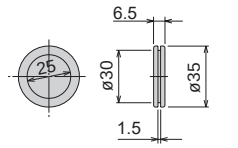		2
3	Cross-recessed pan head screw	M8 × 8	2
4	Hexagon nut	M4	2

[KBA-10-BX-F20] flexible duct (KBA-10-FD-□□□) dedicated

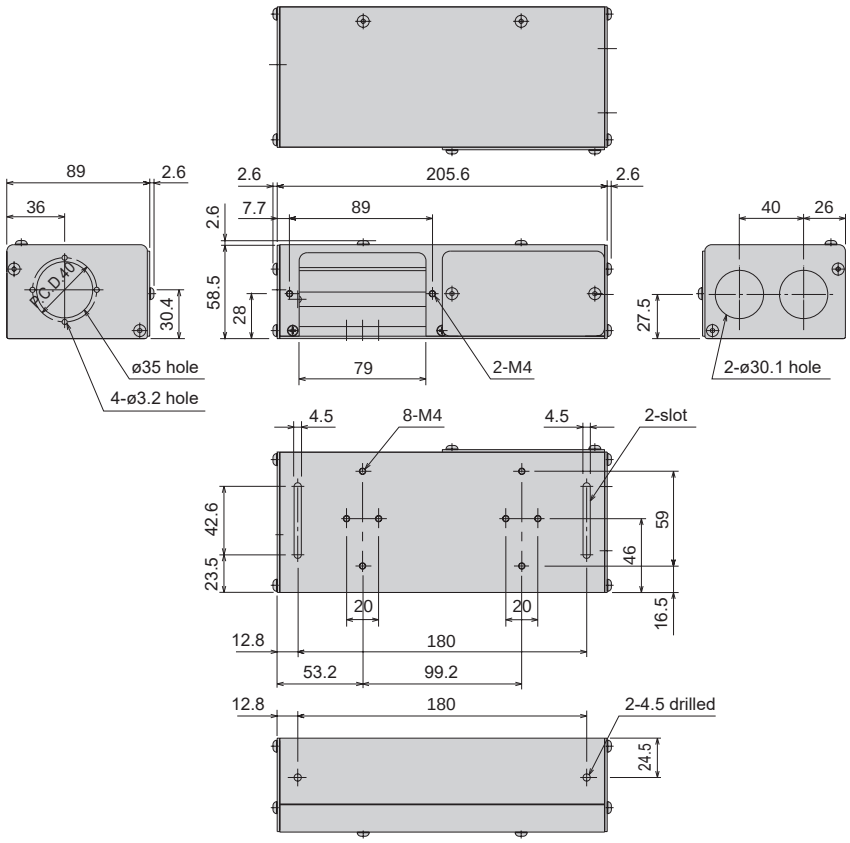

No.	Accessory		Quantity
1	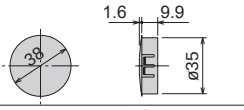		1
2	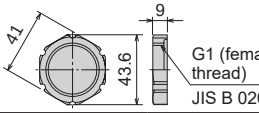	G1 (female thread) JIS B 0202	1
3	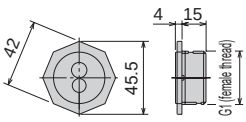		1 set
4	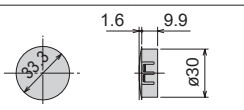		2
5	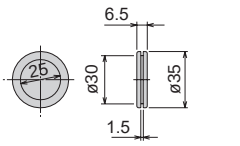		2
6	Cross-recessed pan head screw	M4 × 8	2
7	Hexagon nut	M4	2

[Dimensions]

[KBA-10-BX-F30] flexible duct (KBA-10-FD-□□□) dedicated

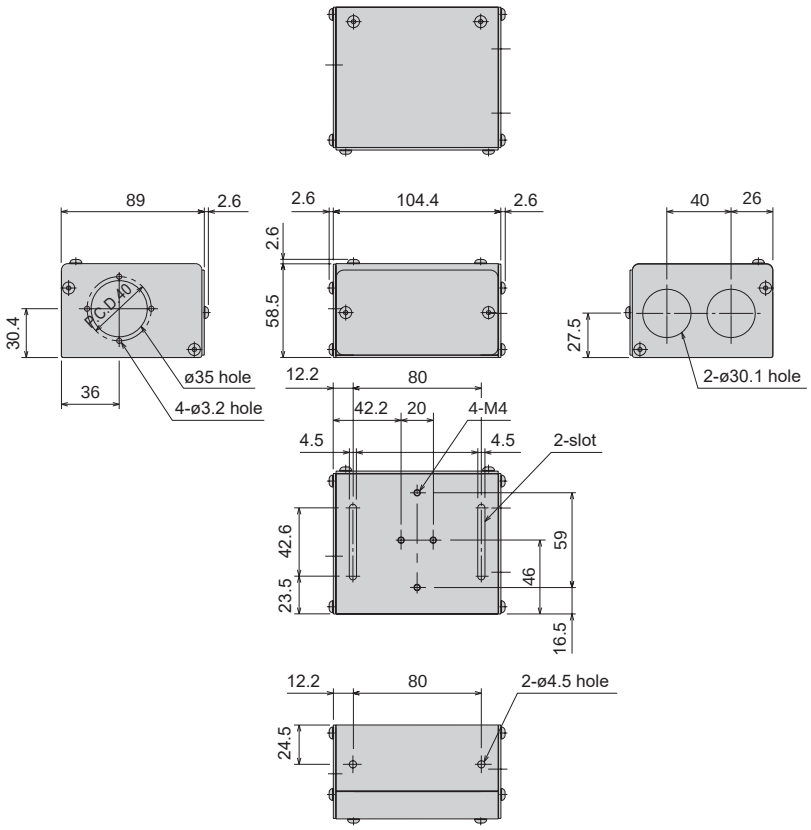

No.	Accessory		Quantity
1	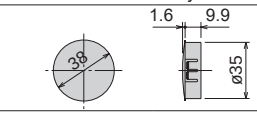		1
2	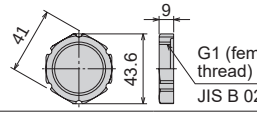		1
3	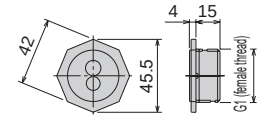		1 set
4	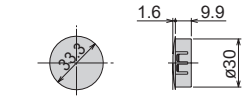		2
5	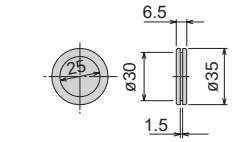		2
6	Cross-recessed pan head screw	M4 × 8	2
7	Hexagon nut	M4	2

CN box wrench

[Applications]

A dedicated wrench for tightening the resin nuts of the cable grip to the CN box and shaft body.

[How to order]

KBA - CGSP - 41

[Dimensions]

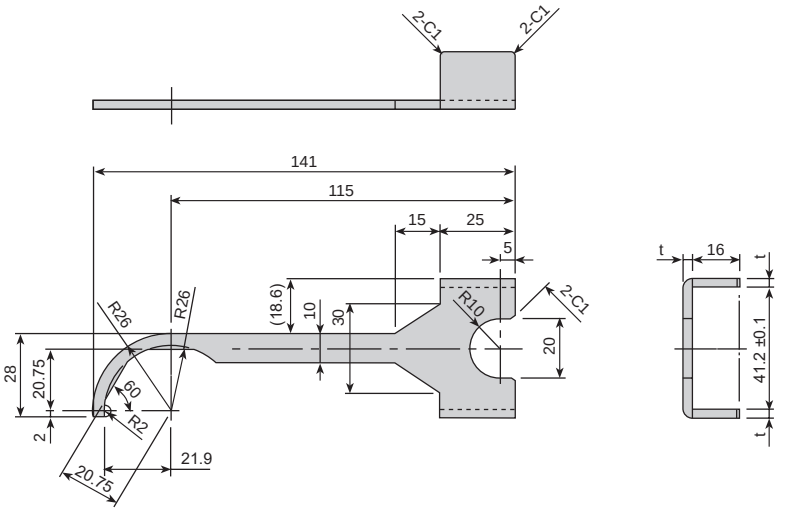

Flexible tube

[Applications]

When combining to an orthogonal axis, use the flexible tube to transfer the controller cable.
Tooling signal wires and pneumatic piping can also be passed through.
This tube can be used in vertical layout (∩) and horizontal layout (⊂) (M size only).
Piping for this tube requires the dedicated CN box (sold separately).

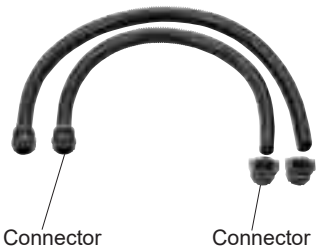

[How to order]

KBA - 10 - FT - M 20

- FT: Flexible tube
- M: Ⓐ Shape
- 20: Ⓑ Tube length

Code	Content
Ⓐ Shape	
M	Ovular
L	Cylindrical

Ⓑ Tube length	
10	1000 mm
15	1500 mm *Can only be selected when A is "M"
20	2000 mm
25	2500 mm *Can only be selected when A is "M"
30	3000 mm

[Dimensions]

• KBA-10-FT-M

Material: (tubing) nylon
(connector) nylon

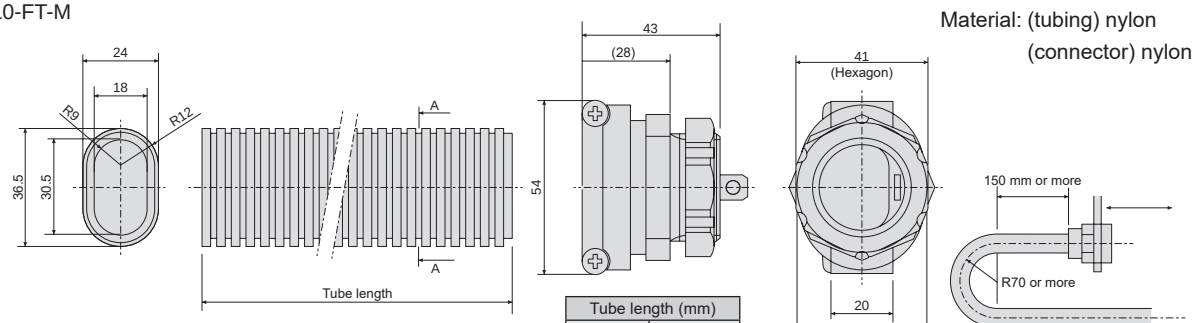

Tube length (mm)	
1000	2500
1500	3000
2000	

* Allowable min. curvature radius = 70 mm
* The connector can be removed.

* Comes with two dedicated connectors and a clamp and band to fix the cable in the tube inlet.
* The tube is ovular. Because of this, there can be no rotation between the tube and the connector.
* Tubing can easily be cut with a cutter knife. During tube installation, use piping with adequate curvature.
* The length of a flexible tube for use between axes in an orthogonal 2-axis type should be about 3 times the stroke of the first axis.
* For piping to the slider of the 2nd axis (the front for axis traveling), select a type that appropriate to the lay model.

[Dimensions]

• KBA-10-FT-L

Material: (tubing) nylon
(connector) nylon

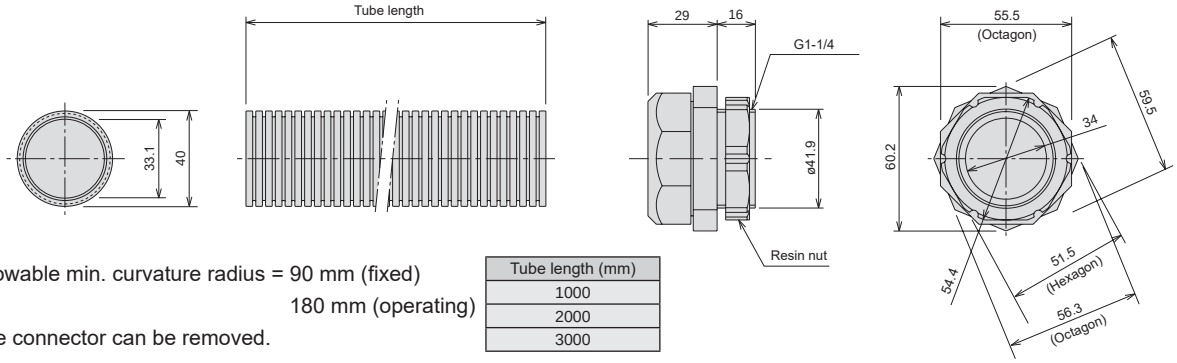

* Allowable min. curvature radius = 90 mm (fixed)
180 mm (operating)
* The connector can be removed.

Tube length (mm)
1000
2000
3000

* Comes with two dedicated connectors.
* Tubing can easily be cut with a cutter knife. During tube installation, use piping with adequate curvature.
* The length of a flexible tube for use between axes in an orthogonal 2-axis type should be about 3 times the stroke of the first axis.

Flexible duct

[Applications]

The flexible duct is used to transfer the controller cable that supplies to movable parts. Tooling signal wires and pneumatic piping mounted by the user can also be passed through. The dedicated CN box (sold separately) is required for duct mounting.

[How to order]

KBA - 10 - FD - M 20

- Ⓐ Link size
- Ⓑ Number of links

Code	Content
Ⓐ Link size	
S	Link internal width 24 × 19 mm
M	Link internal width 44 × 24 mm
L	Link internal width 58 × 24.5 mm

Ⓑ Number of links	
10 to 34	Link size: S
10 to 50	Link size: M
10 to 50	Link size: L

* For use with a combination axis, use a mounting bracket (KBA-FBK-* sold separately). Contact CKD for details.
* Choose a flexible duct size that allows for extra space when passing through pipes and wiring.
* Refer to the flexible duct selection method to select the number of links with a significant margin.

[Flexible duct selection for connecting 1st and 2nd axes]

(1) Determine a link size.
(2) Calculate the total length (L) of the flexible duct. Flexible duct total length (L) = basic length (B) + X-axis stroke (X)
(3) Calculate the number of links (A). Number of links (A) = flexible duct total length (L) ÷ link pitch (C)
(Note) Round up fractions for the number of links.

Combination	1st axis	2nd axis	Link size	Basic length mm (B)
X-Y	KBX-30-ST	KBX-10-ST	M (L may also be used)	585
	KBX-30-UR/UL	KBX-10-UR/UL	M (L may also be used)	360
	KBX-50-ST	KBX-30-ST	L (M may also be used)	630
	KBX-50-UR/UL	KBX-30-ST	L (M may also be used)	540
X-Z	KBX-30-ST	KBX-10-ST	M (L may also be used)	630
	KBX-30-UR/UL	KBX-10-UR/UL	M (L may also be used)	360
	KBX-50-ST	KBX-30-ST	L (M may also be used)	765
	KBX-50-UR/UL	KBX-30-UR/UL	L (M may also be used)	675

Link size	Pitch mm (C)
S	32
M	45
L	45

* A basic combination example. Contact a dealer or CKD regarding other combinations.

[Dimensions]

[KBA-10-FD-S**]

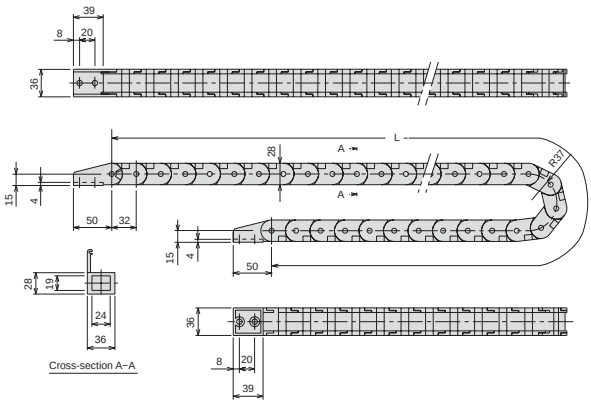

[KBA-10-FD-M**]

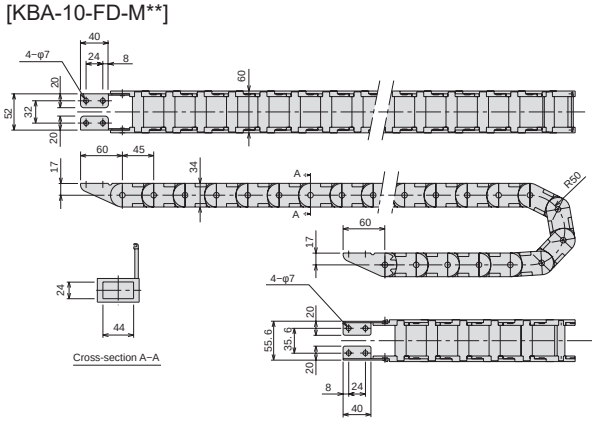

[KBA-10-FD-L**]

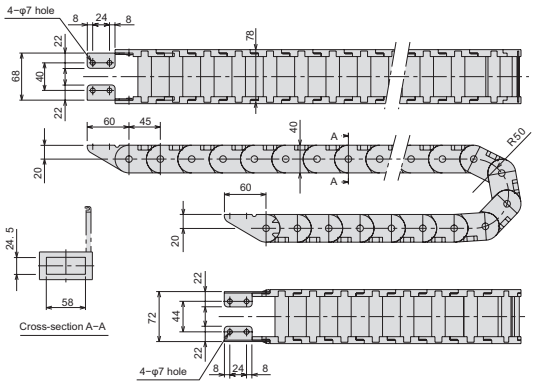

Tube tray

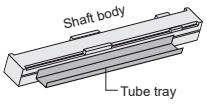

[Applications]

A tray that supports the flexible tube when using it horizontally (⊂). Use the 4 mm T groove on the shaft body to fix when mounting. In addition to supporting the flexible tube, this tray prevents lateral movement.

[How to order]

KBA - 10 - TT - M 23

Ⓐ Tray length

Code	Content
Ⓐ Tray length	
23	230 mm
43	430 mm
63	630 mm
83	830 mm
A3	1030 mm
C3	1230 mm

[Dimensions]

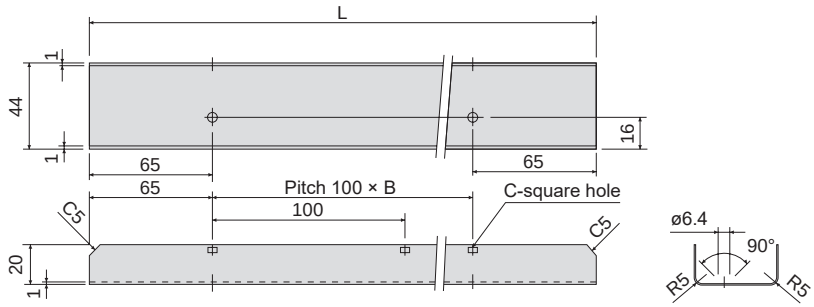

Material: stainless steel

L (mm)	B	C
230	1	2
430	3	4
630	5	6
830	7	8
1030	9	10
1230	11	12

Accessories: L brackets, mounting screws

Flexible tray

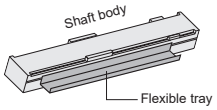

[Applications]

A tray to support flexible ducts.
Use the 4 mm T groove on the shaft body to fix when mounting. This tray prevents lateral movement.

[How to order]

KBA - 10 - TT - L 24

Ⓐ Tray size

Ⓑ Tray length *1

*1: Refer to the dimensions for tray length.

Code	Content
Ⓐ Tray size	
M	For M link
L	For X-axis side
X	For X-axis cover top surface installation

Ⓑ Tray length	
24	240 mm
to	to
J4	1840 mm

[Dimensions]

• KBA-10-TT-M*4

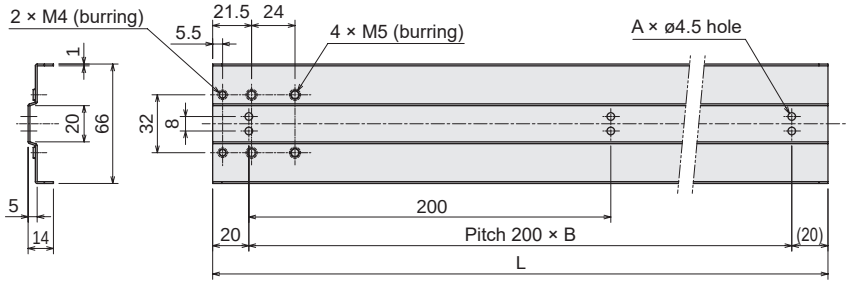

Model No.	L (mm)	A	B
KBA-10-TT-M24	240	2	1
KBA-10-TT-M44	440	3	2
KBA-10-TT-M64	640	4	3
KBA-10-TT-M84	840	5	4
KBA-10-TT-MA4	1040	6	5
KBA-10-TT-MC4	1240	7	6
KBA-10-TT-ME4	1440	8	7
KBA-10-TT-MG4	1640	9	8
KBA-10-TT-MJ4	1840	10	9

• KBA-10-TT-L*4

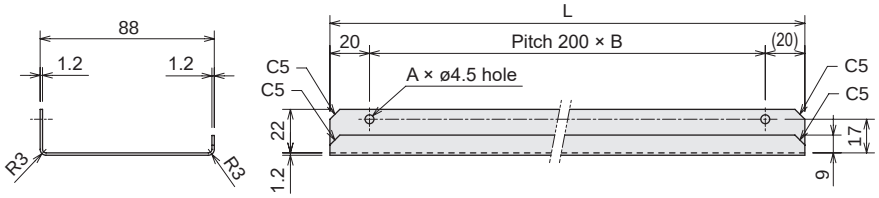

Model No.	L (mm)	A	B
KBA-10-TT-L24	240	2	1
KBA-10-TT-L44	440	3	2
KBA-10-TT-L64	640	4	3
KBA-10-TT-L84	840	5	4
KBA-10-TT-LA4	1040	6	5
KBA-10-TT-LC4	1240	7	6

• KBA-10-TT-X*4

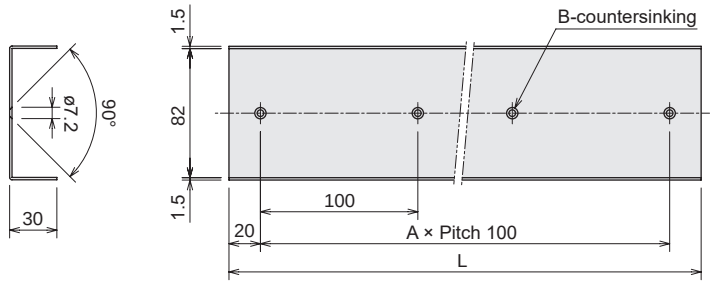

Model No.	L (mm)	A	B
KBA-10-TT-XC4	1240	12	13
KBA-10-TT-XD4	1340	13	14
KBA-10-TT-XE4	1440	14	15
KBA-10-TT-XF4	1540	15	16
KBA-10-TT-XG4	1640	16	17
KBA-10-TT-XH4	1740	17	18

Support guide

[Applications]

A guide rail for Y-axis front support. Attaching it to the front of the Y-axis lessens the moment applied to the X-axis and reduces Y-axis sag. Use for work requiring rigidity or work requiring a Y-axis with a long stroke.

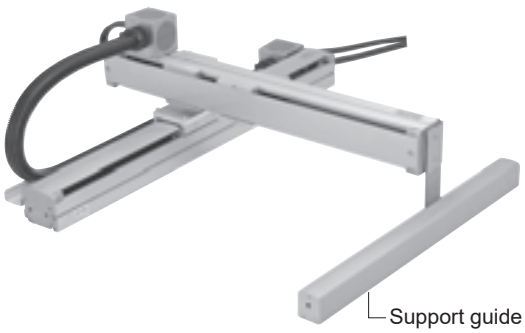

[How to order]

KBA - 10 - SG - M 40

Ⓐ Combination — Ⓑ X-axis stroke

Code	Content
Ⓐ Combination	
10	KBX-10 (X-axis) - KBX-10 (Y-axis)
31	KBX-30 (X-axis) - KBX-10 (Y-axis)
53	KBX-50 (X-axis) - KBX-30 (Y-axis)
Ⓑ X-axis stroke	
10 to 90	100 mm to 900 mm
A0 to F0	1000 mm to 1500 mm

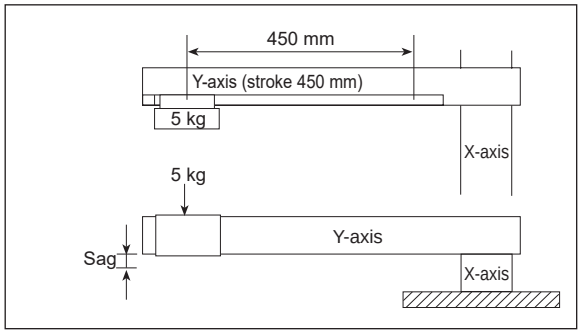

■ Sag ■

The sag when the Y-axis slider is positioned at the front end of the Y-axis and a load of 5 kg is applied, as shown in the figure to the right.
For X-axis: KBX-10E-ST-M, Y-axis: KBX-10E-ST-S (450 mm stroke)

	Sag
Without support guide	0.4 mm
With support guide	0.07 mm

[Load capacity]

Because the moment applied to the X-axis can be reduced, combination load capacity can be increased.
This differs depending on the models combined, so contact a dealer or CKD for details.

[Dimensions]

KBA-10-SG

X-axis: KBA-10□-□□-M□□N-□□
Y-axis: KBA-10□-□□-S□□N-□□
Common to ball screw drive and timing belt drive

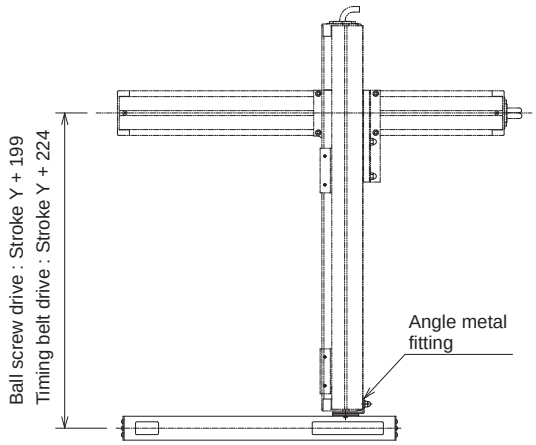

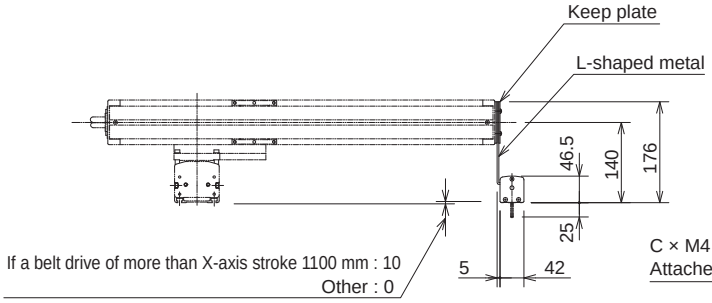

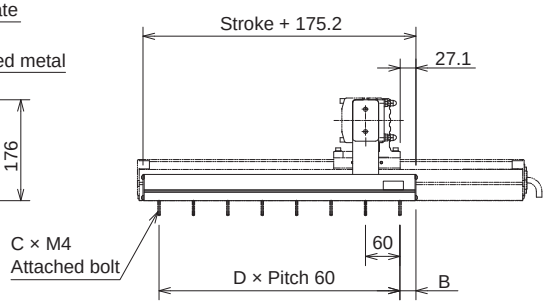

Stroke X (mm)	100	200	300	400	500	600	700	800	900	1000	1100	1200	1300	1400	1500
Stroke code	10	20	30	40	50	60	70	80	90	A0	B0	C0	D0	E0	F0
B (mm)	17.6	7.6	27.6	17.6	7.6	27.6	17.6	7.6	27.6	17.6	7.6	27.6	17.6	7.6	27.6
C (number of bolts)	5	7	8	10	12	13	15	17	18	20	22	23	25	27	28
D	4	6	7	9	11	12	14	16	17	19	21	22	24	26	27

* The value in C is the number of accessory fixing bolts.

[Dimensions]

KBA-31-SG

X-axis: KBA-30□-□□-M□□N-□□
Y-axis: KBA-10□-□□-M□□N-□□
Common to ball screw drive and timing belt drive

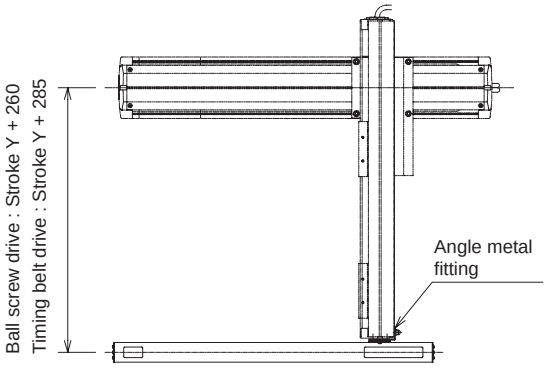

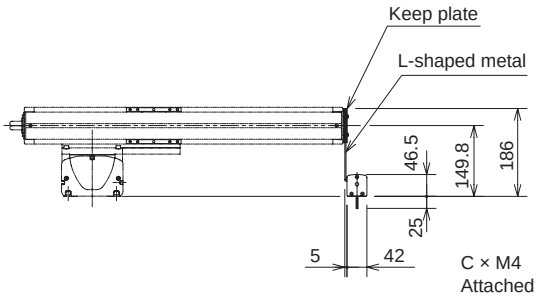

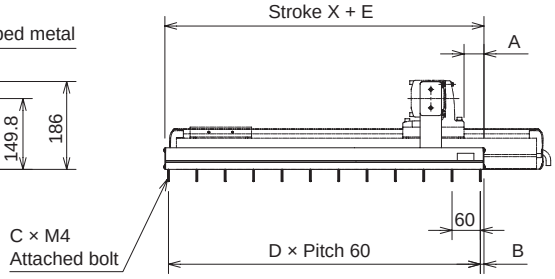

Stroke X (mm)	100	200 (150)	300 (250)	400 (350)	500 (450)	600 (550)	700 (650)	800 (750)	900 (850)	1000 (950)	1100 (1050)	1200	1300	1400	1500
Stroke code	10	20 (15)	30 (25)	40 (35)	50 (45)	60 (55)	70 (65)	80 (75)	90 (85)	A0 (95)	B0 (A5)	C0	D0	E0	F0
A (mm)	17.1 (42.1)														
B (mm)	17.6	7.6	27.6	17.6	7.6	27.6	17.6	7.6	27.6	17.6	7.6	27.6	17.6	7.6	27.6
C (number of bolts)	5	7	8	10	12	13	15	17	18	20	22	23	25	27	28
D	4	6	7	9	11	12	14	16	17	19	21	22	24	26	27
E (mm)	176 (226)														

* The value inside ( ) only applies when the X-axis is KBX-30E-ST (ball screw drive)
* The value in C is the number of accessory fixing bolts.

KBA-53-SG

X-axis: KBA-50□-□□-M□□N-□□
Y-axis: KBA-30□-□□-M□□N-□□
Common to ball screw drive and timing belt drive

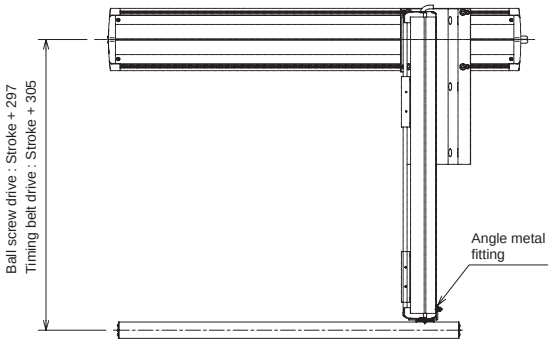

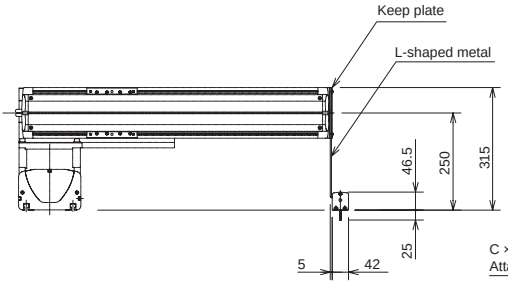

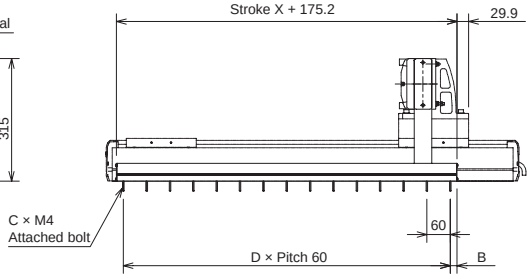

Stroke X (mm)	100	200	300	400	500	600	700	800	900	1000	1100	1200	1300	1400	1500
Stroke code	10	20	30	40	50	60	70	80	90	A0	B0	C0	D0	E0	F0
B (mm)	17.6	7.6	27.6	17.6	7.6	27.6	17.6	7.6	27.6	17.6	7.6	27.6	17.6	7.6	27.6
C (number of bolts)	5	7	8	10	12	13	15	17	18	20	22	23	25	27	28
D	4	6	7	9	11	12	14	16	17	19	21	22	24	26	27

* The value in C is the number of accessory fixing bolts.

Origin change sensor

[Applications]

An origin sensor used to change the origin return position of the axis slider to the side opposite the motor or the mid-point of the stroke. This function works effectively when the origin is on the side opposite to the motor.
When used with traveling axis combinations, this sensor is required because the origin is located opposite to the motor side.

[When the origin is on the side opposite to the motor]

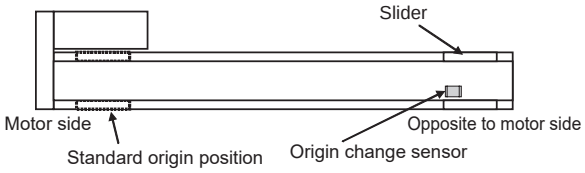

★ Controller parameters (motor rotation direction) must be changed.

[When the origin is on the side opposite to the motor]

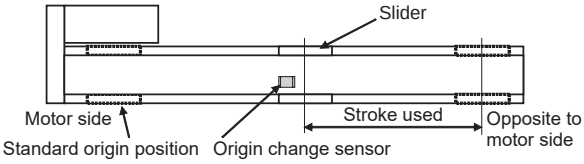

★ Always prepare a stopper so that the slider does not go more than approx. 3 mm away from the origin in the direction of the motor.

[How to order]

KBA - HBS - BA 10

Ⓐ Applicable axis

Code	Content
Ⓐ Applicable axis	
10	Ball screw drive axis, high load specification belt drive axis (stroke 1,500 mm or less)
20	Timing belt drive axis (KBX-10, KBX-30, KBX-50 stroke 1,500 mm or less)
20L	Timing belt drive axis (KBX-10, KBX-30, KBX-50 stroke 2,700 mm or less)

* When using with models that exceed the applicable stroke, contact a dealer or CKD.

[Dimensions]

KBA-HBS-BA10

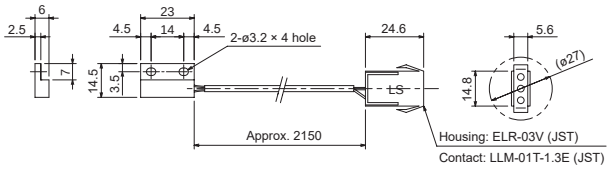

KBA-HBS-BA20, KBA-HBS-BA20L

Type	Cable length L (mm)
HBS-BA20	Approx. 1950
HBS-BA20L	Approx. 3200

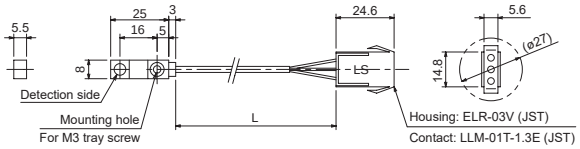

Sleeve cone

[Applications]

When using the flexible tube with the user wiring or piping passed through it, mount it to a CN box hole to fix the wires or piping.
Use a different hole than one used for controller cable or flexible tube when mounting to the CN box.
User wiring and controller cable merge and branch off inside the CN box.

[How to order]

KBA - 10 - SC - A 02

Sleeve cone

* Up to four bore sizes are available according to the wiring size used.

[Dimensions]

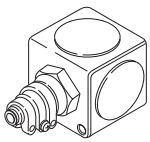

	Applied electrical wiring (mm)
1st stage	ø9 to 11
2nd stage	ø11 to 14
3rd stage	ø14 to 17
4th stage	ø17 to 19

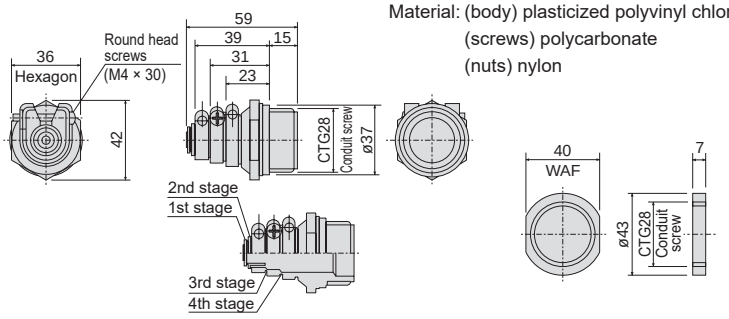

Material: (body) plasticized polyvinyl chloride
(screws) polycarbonate
(nuts) nylon

Cable grip

[Applications]

Used to seal the entry hole of the shaft body or CN box to prevent controller cables from being disconnected or moving in the flexible tube.
This grip is intended for fixing the controller cable. To fix the user's cable, use a sleeve cone.
The cable grip comes in the two types: for two wires of a single axis and for four wires of a 2-axis.

[How to order]

KBA - 10 - CG - M2 2

Ⓐ Number of cables

Code	Content
Ⓐ **Number of cables**	
2	For 2 wires
4	For 4 wires

* Cable grip can be split into two to make passing the controller cable through easier.
* The controller cable comes with one cable grip for two wires and the CN box comes with two cable grips for two wires.

[Dimensions]

Material: nylon

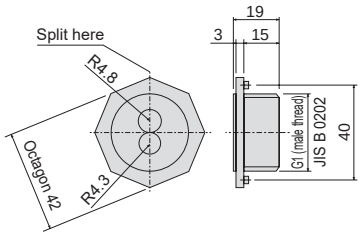

For 2 wires

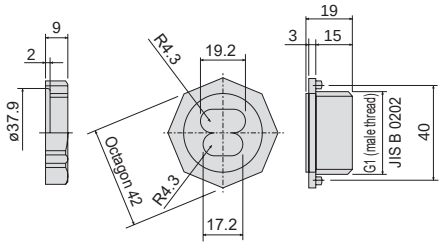

For 4 wires

Control part

KBX Series

KBZ Series

[KBX Series control parts]

Master(Scanner) unit
KCA-25-M□0


KCA-25-M10


KCA-25-M40/M80

Page 174

Motor capacity	I/O type	Extension interface unit
For 50 to 200 W	NPN I/O	None
For 400 W	PNP I/O	CC-Link unit
For 750 W		DeviceNet unit
		Extension I/O unit

Slave(Adapter) unit
KCA-25-S□0


KCA-25-S10


KCA-25-S40/S80

Page 181

Motor capacity	I/O type
For 50 to 200 W	NPN I/O
For 400 W	PNP I/O
For 750 W	

Regenerative discharge unit
KCA-ABSU-□000


KCA-ABSU-2000/4000


KCA-ABSU-8000

Page 194

Motor capacity
For 50 to 200 W
For 400 W
For 750 W

Handy terminal
KCA-TPH-4C

Page 197

PC software
KCA-SF-98D

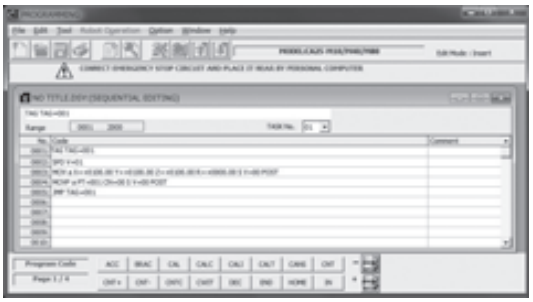

Page 199

MEMO

Master(Scanner) unit

* Used as the master(scanner) unit for single axis to 4-axis types. A driver circuit board for a single axis is also incorporated.
  Easy teaching is possible by a program using the conventional robot language.
* For the supply power, multi power (100 to 115 VAC, 200 to 230 VAC) is used to cope with globalized production. (Note KCA-25-M40 and KCA-25-M80 are only used with a power supply of 200 to 230 VAC.)
* Select NPN or PNP for I/O signal.
* The multitask function (number of controlled axes: 4) is also available, which allows execution of up to four tasks in the sequential mode, so that two or more jobs can be executed at the same time.
* Handy terminal KCA-TPH-4C is used.

How to order controllers

KCA - 25 - M 10 - N X C

- Ⓐ Motor capacity
- Ⓑ Select I/O type
- Ⓒ Extension I/F unit

Code	Content
Ⓐ Motor capacity	
10	50 W to 200 W
40	400 W
80	750 W
Ⓑ Select I/O type	
N	NPN I/O
P	PNP I/O
Ⓒ Extension I/F unit	
X	None
C	CC-Link unit
D	DeviceNet unit
B	Extension I/O unit (common to NPN and PNP I/O)

KCA-25-M10-*XC

KCA-25-M40-*XC
KCA-25-M80-*XC

With Extension I/O unit

[System configuration]

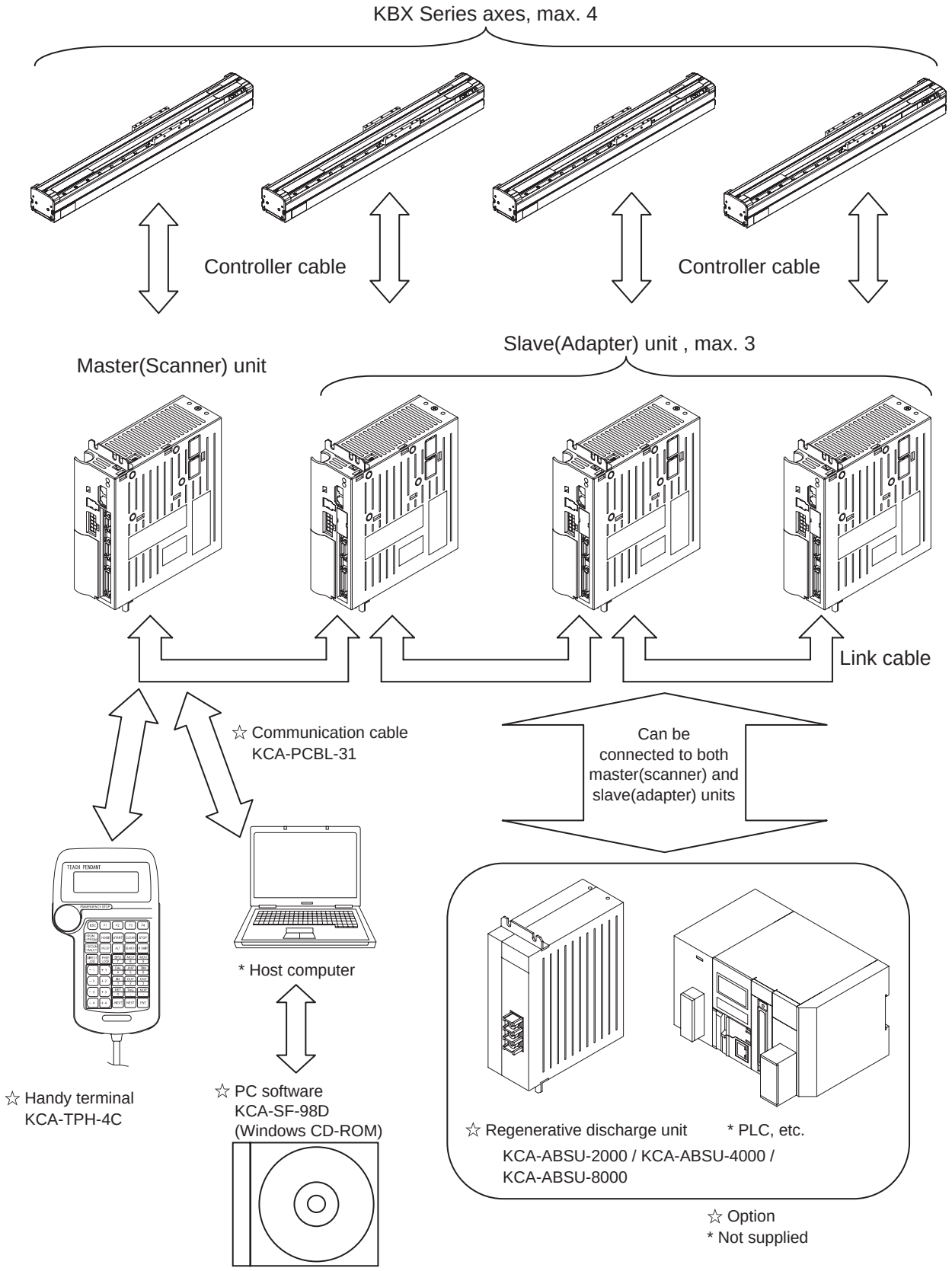

[Master(Scanner) unit specifications]

Applicable actuator		KBX Series				
Controller		KCA-25-M10			KCA-25-M40 *1	KCA-25-M80 *2
No. of control axes		1 axis, or 2 to 4 simultaneously controlled axes when connected to the slave(adapter) unit				
Motor capacity *3		50 W	100 W	200 W	400 W	750 W
Drive method		AC servo motor				
Control method		PTP, CP, semi-closed loop control				
Instruction method		Remote teaching, direct teaching, or MDI				
Speed setting		10 stages (changeable)				
Acceleration setting		20 stages (changeable)				
Operation mode		Sequential, palletizing, external point designation				
Operation method		Step, continuous, single acting				
CPU		32 bit RISC CPU				
Origin sensor input		Yes				
Regenerative function		Yes (KCA-ABSU-2000 mounting)			Yes (KCA-ABSU-4000 mounting)	Yes (KCA-ABSU-8000 mounting)
Dynamic brake function		None				
Self-diagnostic function		CPU error, memory error, driver error, master power voltage error, program error, etc. by watchdog timers				
Number of programs		Sequential: 16, palletizing: 16				
Program		Max. 2,500 steps + coordinate table 999 (task total)				
Step No.						
Memory		FRAM				
Number of counters		99				
Number of timers		9				
Abnormal display		Abnormal display indicator ON (front panel), handy terminal				
External I/O	System input	24 V 7 mA 4-points				
External I/O	General purpose input	24 V 7 mA 4-points *4				
External I/O	System output	24 V max. 100 mA 4-points				
External I/O	General purpose output	24 V max. 100 mA 4-points *4				
Communication function		For handy terminal or for PC communication × 1 channel (RS-232C)				
Power		100 to 115 VAC, 200 to 230 VAC, ±10% 50/60 Hz (Changeover of 100 V or 200 V circuit by Voltage Select terminal short-bar on front terminal block.)			200 to 230 VAC, ±10% 50/60 Hz	
Power supply capacity (per axis)		140 VA	210 VA	600 VA	1.2 kVA	1.6 kVA
Ambient conditions	Operating ambient temperature range	0 to 40°C				
Ambient conditions	Ambient humidity range	30% to 90% RH (no condensation)				
Ambient conditions	Storage temperature range	−20 to 70°C				
Ambient conditions	Storage humidity range	30% to 90% RH (no condensation)				
Ambient conditions	Environment	Indoors (no exposure to direct sunlight) at 1,000 m or less above sea level No dirt, dust, or corrosive or flammable gases				
Ambient conditions	Vibration	Less than 9.8 m/s^2				
Dimensions		55 (W) × 160 (H) × 150 (D) (Mounting bracket not included)			85 (W) × 160 (H) × 150 (D) (Mounting bracket not included)	
Weight		0.92 kg			1.58 kg	

CAUTION

(*1) Always use KCA-25-M40 with regenerative discharge unit KCA-ABSU-4000.
(*2) Always use KCA-25-M80 with regenerative discharge unit KCA-ABSU-8000.
(*3) Applicable motor capacity is determined by the front panel controller.
Do not connect motors of differing capacities, as this could result in burning of the motor.
(*4) General purpose I/O can be used as the I/O signal of various systems depending on the mode settings.

Dimensions

No option unit

Controller type KCA-25-M10-*XC

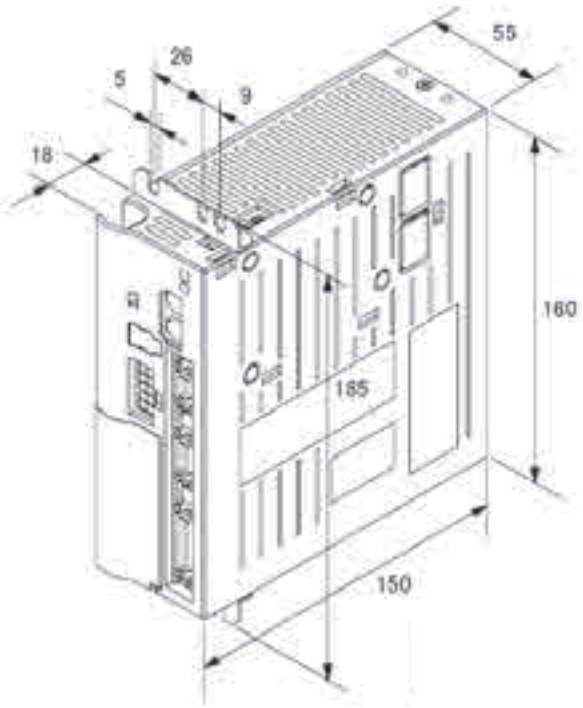

KCA-25-M40-*XC
KCA-25-M80-*XC

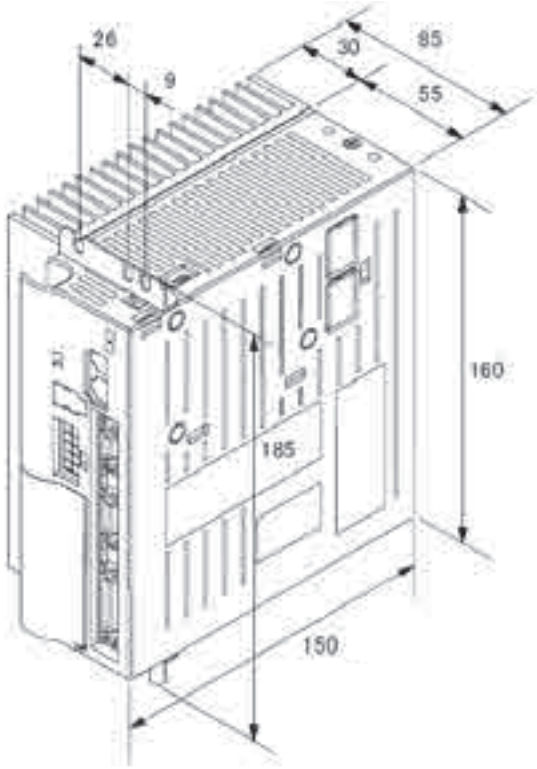

With option unit

KCA-25-M10-**C

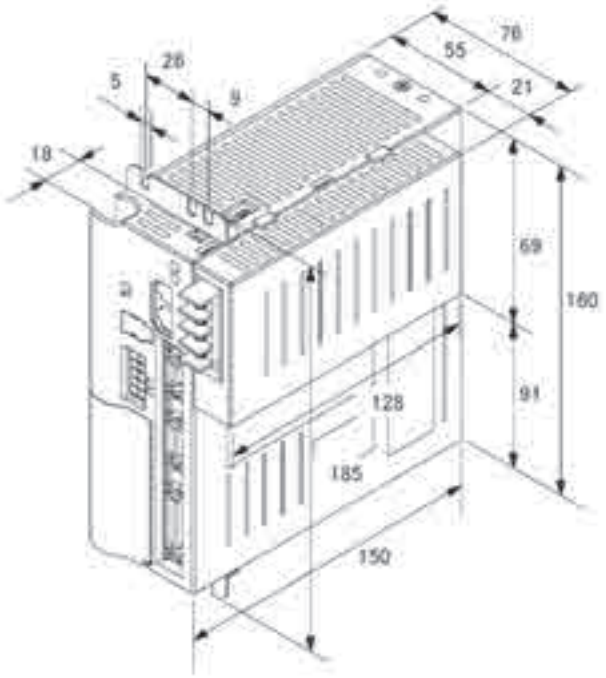

KCA-25-M40-**C
KCA-25-M80-**C

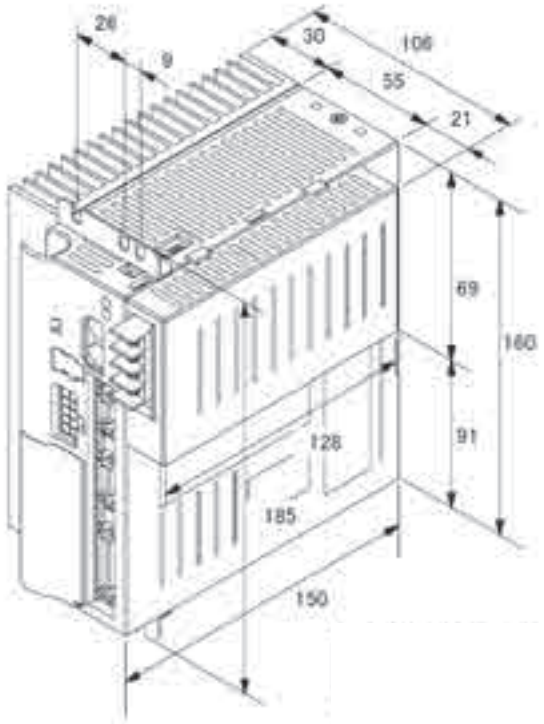

[Section names/functions]

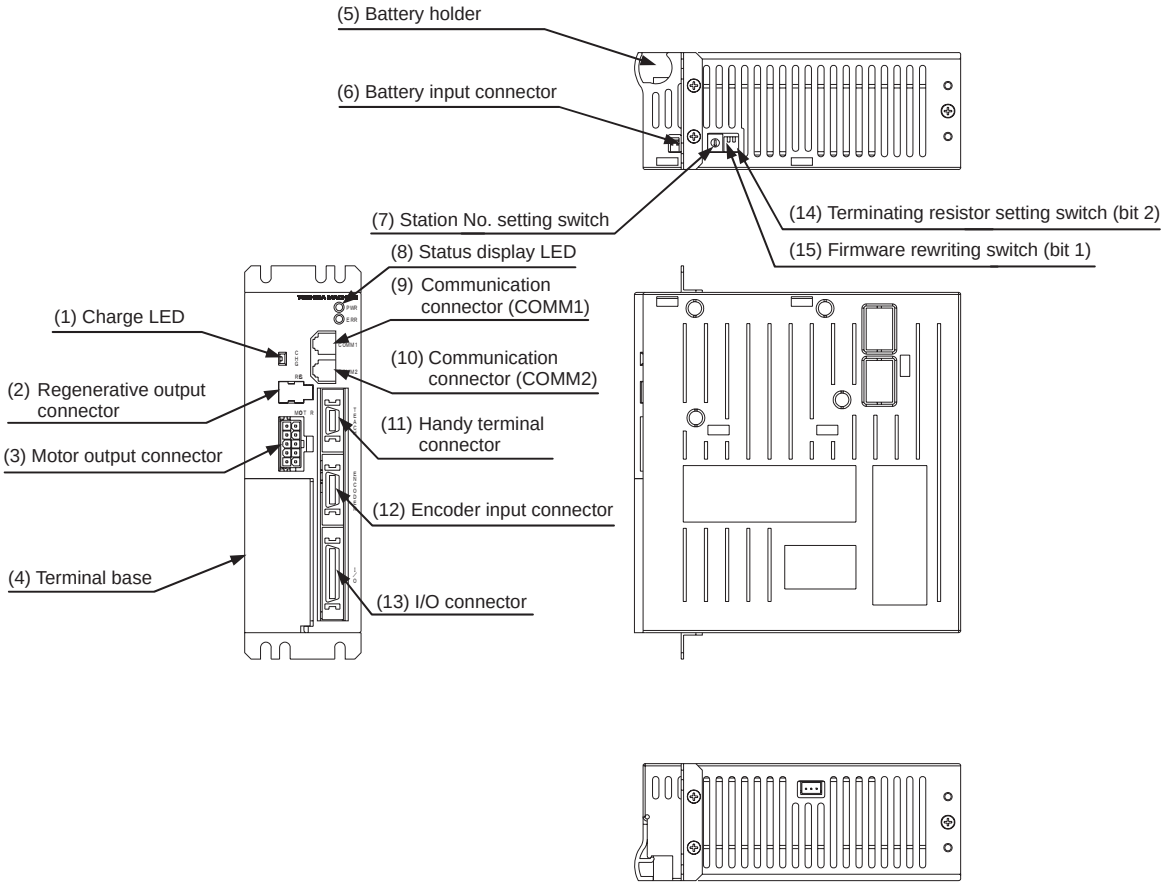

CAUTION The figure above is KCA-25-M10. There is no "(11) Handy terminal connector" with KCA-25-S10. It is a blank plate.

(1) Charge LED
The main circuit smooth capacitor displays the residual voltage status.

(2) Regenerative output connector
Used to connect a regeneration discharge unit (option).

(3) Motor output connector
Used to connect a motor cable.

(4) Terminal base
A power supply input terminal, power supply voltage changeover terminal, FG (frame ground) and LG (line ground) terminals are equipped.

(5) Battery holder
A backup lithium battery for the encoder is equipped.

(6) Battery input connector
Used to connect a battery harness.

(7) Station No. setting switch
Used to specify the station No. of each slave(adapter) unit when slave(adapter) units are connected to control multiple axes. Specify "0" for the master(scanner) unit.

(8) Status display LED
Displays the controller status. When the power is turned on, it lights in green. In case of an error, it lights in red. In other conditions, it blinks.

(9) Communication connector (COMM1)
Used to connect link cables from the host controller.

(10) Communication connector (COMM2)
Used to connect link cables from subordinate controllers.

(11) Handy terminal connector (master(scanner) unit only)
Used to connect cables for handy terminal or PC communication. The slave(adapter) unit is a blank plate.

(12) Encoder input connector
Used to connect an encoder cable.

(13) I/O connector
Connect exterior control components (PLC, etc.).

(14) Terminating resistor setting switch (bit 2)
Used to set the terminating resistor for communication when a slave(adapter) unit is connected.

(15) Firmware rewriting switch (bit 1)
Used to rewrite the controller firmware. Normally should be turned OFF. When it is on, the controller will not start.

[Master(Scanner) unit I/O pin No. and signal No.]

Controller KCA-25-M10, KCA-25-M40, KCA-25-M80

Pin No.	I/O	Signal name	Content	
			NPN I/O specifications	PNP I/O specifications
1	-	+COM1	+COM1	−COM5
2	OUT	OUT1	General purpose output port 1—1	←
3	OUT	OUT2	// 1—2	←
4	OUT	OUT3	// 1—3	←
5	OUT	OUT4	// 1—4	←
6	-	−COM1	−COM1 (*1)	+COM5 (*1)
7	OUT	EMONO	Emergency stop output (NO)	←
8	OUT	EMOCOM	Emergency stop output (COM)	←
9	OUT	EMONC	Emergency stop output (NC)	←
10	-	N.C	N.C	←
11	OUT	OUT5	Operation output	←
12	OUT	OUT6	Abnormal output	←
13	OUT	OUT7	Positioning completion output	←
14	OUT	OUT8	Origin return completion output	←
15	-	N.C	N.C	←
16	-	N.C	N.C	←
17	-	−COM2	−COM2 (*1)	+COM6 (*1)
18	-	N.C	N.C	←
19	-	COM3	COM3 (*2)	←
20	IN	IN1	General purpose input port 1—1	←
21	IN	IN2	// 1—2	←
22	IN	IN3	// 1—3	←
23	IN	IN4	// 1—4	←
24	-	N.C	N.C	←
25	IN	EMIN+	Emergency stop input (+)	←
26	IN	EMIN−	Emergency stop input (−)	←
27	-	COM4	COM4 (*2)	←
28	IN	IN5	Origin return input	←
29	IN	IN6	Start input	←
30	IN	IN7	Stop input	←
31	IN	IN8	Reset input	←
32	-	N.C	N.C	←
33	-	N.C	N.C	←
34	-	N.C	N.C	←
35	-	N.C	N.C	←
36	-	N.C	N.C	←

CAUTION
(*1) The No. 6 pin and the No. 17 pin are connected internally.
(*2) The No. 19 pin and the No. 27 pin are not connected internally.

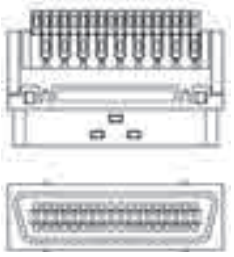

Use the accessory connector.

● Cable side connector model No.
Plug 54306-3619 (MOLEX)
Shell kit 54331-0361 (MOLEX)

● Panel side connector model No.
Receptacle 52986-3621 (MOLEX)

Applicable wire size : AWG24 (0.22 mm^2)

[Master(Scanner) unit I/O specifications]

Controller KCA-25-M10, KCA-25-M40, KCA-25-M80

General purpose output circuit (NPN output)

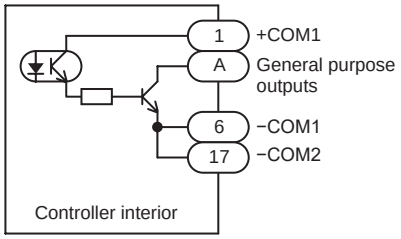

1) A: OUT1 - OUT4
2) Voltage: 24 VDC
3) Current: 100 mA (max.)
4) Photo coupler insulation
5) Open collector output

General purpose output circuit (PNP output)

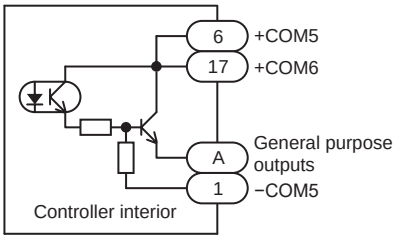

1) A: OUT1 - OUT4
2) Voltage: 24 VDC
3) Current: 100 mA (max.)
4) Photo coupler insulation
5) Emitter follower output

General purpose input circuit (common to NPN and PNP inputs)

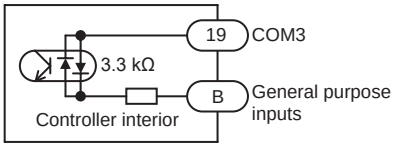

1) B: IN1 - IN4
2) Voltage: 24 VDC
3) Current: 7 mA
4) Photo coupler insulation

System output circuit (NPN output)

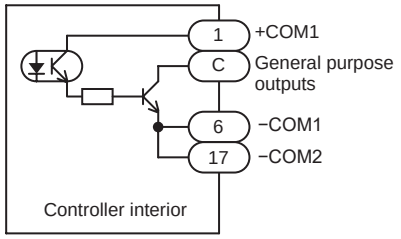

1) C: OUT5 - OUT8
2) Voltage: 24 VDC
3) Current: 100 mA (max.)
4) Photo coupler insulation
5) Open collector output

System output circuit (PNP output)

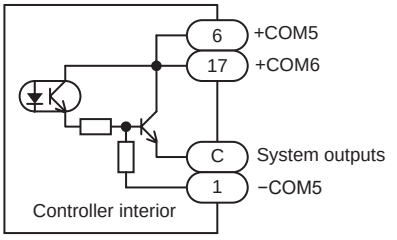

1) C: OUT5 - OUT8
2) Voltage: 24 VDC
3) Current: 100 mA (max.)
4) Photo coupler insulation
5) Emitter follower output

System input circuit (common to NPN and PNP inputs)

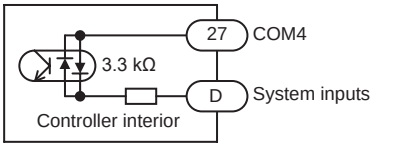

1) D: IN5 - IN8
2) Voltage: 24 VDC
3) Current: 7 mA
4) Photo coupler insulation

CAUTION

- The controller types differ for the two output circuit types, NPN output specifications and PNP output specifications.
- The input circuit is common between NPN input specifications and PNP input specifications.
- This device has no I/O power supply output (24 VDC). You must request it from a third party supplier.
- General purpose I/O can be used as the I/O signal of various functions depending on the mode settings.

Slave(Adapter) unit

* Used as an auxiliary unit when controlling the master(scanner) unit.
* A driver unit for a one axis drive is built in to this unit.
* Select NPN or PNP for I/O signal.
* For the supply power, multi power (100 to 115 VAC, 200 to 230 VAC) is used to cope with globalized production.
  (Note: KCA-25-S40 and KCA-25-S80 are only used with a power supply of 200 to 230 VAC.)

How to order slave(adapter) units

KCA - 25 - S 10 - N X X

Ⓐ Motor capacity

Ⓑ Select I/O type

Code	Content
Ⓐ Motor capacity	
10	50 W to 200 W
40	400 W
80	750 W
Ⓑ Select I/O type	
N	NPN I/O
P	PNP I/O

KCA-25-S10-*XX

KCA-25-S40-*XX
KCA-25-S80-*XX

[Slave(Adapter) unit specifications]

Applicable actuator		KBX Series				
Controller		KCA-25-S10			KCA-25-S40 *1	KCA-25-S80 *2
No. of control axes		1-axis (with connection to the master(scanner) unit)				
Motor capacity *3		50 W	100 W	200 W	400 W	750 W
Drive method		AC servo motor				
Origin sensor input		Yes				
Regenerative function		Yes (KCA-ABSU-2000 mounting)			Yes (KCA-ABSU-4000 mounting)	Yes (KCA-ABSU-8000 mounting)
Dynamic brake function		None				
Self-diagnostic function		Driver error, power supply voltage error, etc.				
Abnormal display		Abnormal display indicator ON (front panel), handy terminal (connect to master(scanner) unit)				
External I/O	General purpose input	24 V 7 mA 8-points				
External I/O	General purpose output	24 V 100 mA 8-points				
Power		100 to 115 VAC, 200 to 230 VAC, ±10% 50/60 Hz (Changeover of 100 V or 200 V circuit by Voltage Select terminal short-bar on front terminal block.)			200 to 230 VAC, ±10% 50/60 Hz	
Power supply capacity (per axis)		140 VA	210 VA	600 VA	1.2 kVA	1.6 kVA
Ambient conditions	Operating ambient temperature range	0 to 40°C				
Ambient conditions	Ambient humidity range	30% to 90% RH (no condensation)				
Ambient conditions	Storage temperature range	−20 to 70°C				
Ambient conditions	Storage humidity range	30% to 90% RH (no condensation)				
Ambient conditions	Environment	Indoors (no exposure to direct sunlight) at 1,000 m or less above sea level No dirt, dust, or corrosive or flammable gases				
Ambient conditions	Vibration	Less than 9.8 m/s^2				
Dimensions		55 (W) × 160 (H) × 150 (D) (Mounting bracket not included)			85 (W) × 160 (H) × 150 (D) (Mounting bracket not included)	
Weight		0.92 kg			1.58 kg	

CAUTION

(*1) Always use KCA-25-S40 with regenerative discharge unit KCA-ABSU-4000.
(*2) Always use KCA-25-S80 with regenerative discharge unit KCA-ABSU-8000.
(*3) Applicable motor capacity is determined by the front panel controller.
Do not connect motors of differing capacities, as this could result in burning of the motor.

Dimensions

Controller KCA-25-S10-*XX

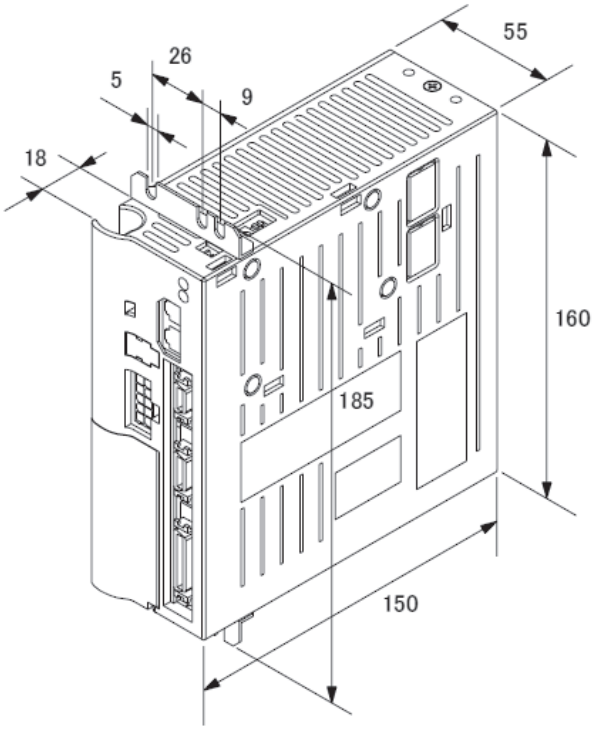

KCA-25-S40-*XX
KCA-25-S80-*XX

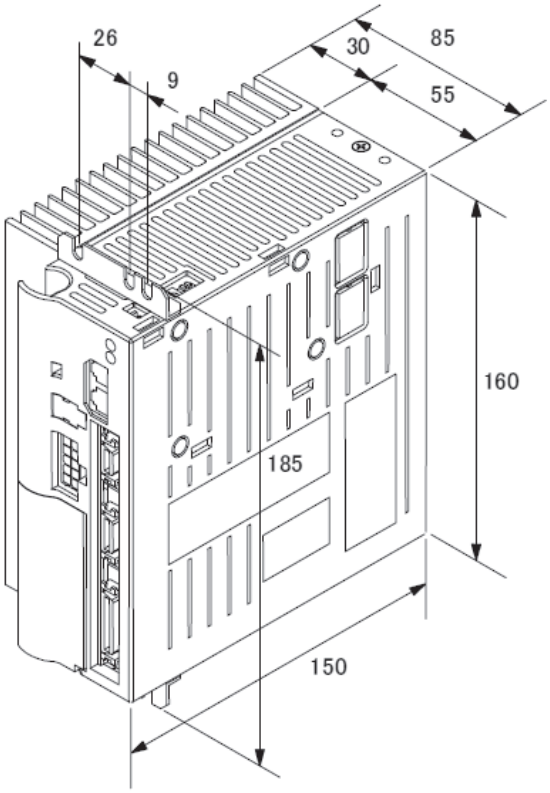

[Section names/functions]

Refer to the master(scanner) unit item on page 178 for the names and functions of each section.

[Slave(Adapter) unit I/O pin No. and signal No.]

Controller KCA-25-S10, KCA-25-S40, KCA-25-S80

Pin No.	I/O	Signal name	Content	
			NPN I/O specifications	PNP I/O specifications
1	-	+COM1	+COM1	−COM5
2	OUT	OUT1	General purpose output port 1—1	←
3	OUT	OUT2	// 1—2	←
4	OUT	OUT3	// 1—3	←
5	OUT	OUT4	// 1—4	←
6	-	−COM1	−COM1 (*1)	+COM5 (*1)
7	-	N.C	N.C	←
8	-	N.C	N.C	←
9	-	N.C	N.C	←
10	-	N.C	N.C	←
11	OUT	OUT5	General purpose output port 1—5	←
12	OUT	OUT6	// 1—6	←
13	OUT	OUT7	// 1—7	←
14	OUT	OUT8	// 1—8	←
15	-	N.C	N.C	←
16	-	N.C	N.C	←
17	-	−COM2	−COM2 (*1)	+COM6 (*1)
18	-	N.C	N.C	←
19	-	COM3	COM3 (*2)	←
20	IN	IN1	General purpose input port 1—1	←
21	IN	IN2	// 1—2	←
22	IN	IN3	// 1—3	←
23	IN	IN4	// 1—4	←
24	-	N.C	N.C	←
25	-	N.C	N.C	←
26	-	N.C	N.C	←
27	-	COM4	COM4 (*2)	←
28	IN	IN5	General purpose input port 1—5	←
29	IN	IN6	// 1—6	←
30	IN	IN7	// 1—7	←
31	IN	IN8	// 1—8	←
32	-	N.C	N.C	←
33	-	N.C	N.C	←
34	-	N.C	N.C	←
35	-	N.C	N.C	←
36	-	N.C	N.C	←

N.C: No Connection

CAUTION
(*1) The No. 6 pin and the No. 17 pin are connected internally.
(*2) The No. 19 pin and the No. 27 pin are not connected internally.

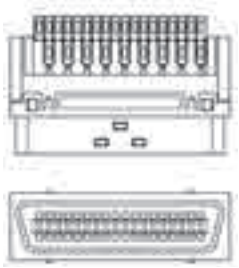

Use the accessory connector.

● Cable side connector model No.

Plug 54306-3619 (MOLEX)

Shell kit 54331-0361 (MOLEX)

● Panel side connector model No.

Receptacle 52986-3621 (MOLEX)

Applicable wire size : AWG24 (0.22 mm^2)

[Slave(Adapter) unit I/O specifications]

Controller KCA-25-S10, KCA-25-S40, KCA25-S80

General purpose output circuit (NPN output)

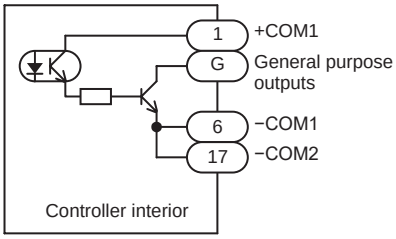

1) G:OUT1 - OUT8
2) Voltage: 24 VDC
3) Current: 100 mA (max.)
4) Photo coupler insulation
5) Open collector output

General purpose output circuit (PNP output)

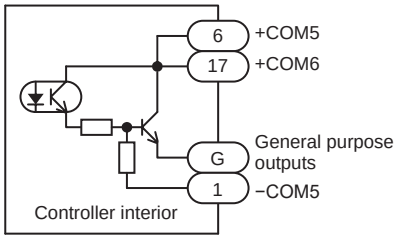

1) G: OUT1 - OUT8
2) Voltage: 24 VDC
3) Current: 100 mA (max.)
4) Photo coupler insulation
5) Emitter follower output

General purpose input circuit (common to NPN and PNP inputs)

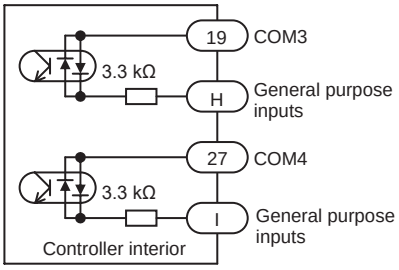

1) H: IN1 - IN4 I: IN5 - IN8
2) Voltage: 24 VDC
3) Current: 7 mA
4) Photo coupler insulation
5) The No. 19 pin and the No. 27 pin are not connected internally.

CAUTION

- The controller types differ for the two output circuit types, NPN output specifications and PNP output specifications.
- The input circuit is common between NPN input specifications and PNP input specifications.
- This device has no I/O power supply output (24 VDC). You must request it from a third party supplier.
- General purpose I/O can be used as the I/O signal of various functions depending on the mode settings.

Extension I/O unit

The extension I/O unit increases the number of I/O points for the master(scanner) unit by 24 input points and 8 output points. Use when there are not enough I/O connectors on the controller body.
This unit has bidirectional polarity, and is used for input and output circuits.
(Note) Mounting cannot be performed by the customer.

KCA-25-M10-*BC

[Extension I/O unit pin No. and signal No.]

Pin No.	I/O	Signal name	Content		
			NPN I/O specifications		PNP I/O specifications
1	IN	IN9	General purpose input port	2—1	←
2	IN	IN10	//	2—2	←
3	IN	IN11	//	2—3	←
4	IN	IN12	//	2—4	←
5	IN	IN13	//	2—5	←
6	IN	IN14	//	2—6	←
7	IN	IN15	//	2—7	←
8	IN	IN16	//	2—8	←
9	IN	IN17	//	3—1	←
10	-	COM7	COM7	(*1)	←
11	IN	IN18	General purpose input port	3—2	←
12	IN	IN19	//	3—3	←
13	-	COM8	COM8	(*2)	←
14	IN	IN20	General purpose input port	3—4	←
15	IN	IN21	//	3—5	←
16	IN	IN22	//	3—6	←
17	IN	IN23	//	3—7	←
18	IN	IN24	//	3—8	←
19	IN	IN25	//	4—1	←
20	IN	IN26	//	4—2	←
21	IN	IN27	//	4—3	←
22	IN	IN28	//	4—4	←
23	IN	IN29	//	4—5	←
24	IN	IN30	//	4—6	←
25	IN	IN31	//	4—7	←
26	IN	IN32	//	4—8	←
27	OUT	OUT9	General purpose output port	2—1	←
28	OUT	OUT10	//	2—2	←
29	-	COM9	COM9	(*2)	←
30	OUT	OUT11	General purpose output port	2—3	←
31	OUT	OUT12	//	2—4	←
32	OUT	OUT13	//	2—5	←
33	OUT	OUT14	//	2—6	←
34	OUT	OUT15	//	2—7	←
35	OUT	OUT16	//	2—8	←
36	-	N.C	N.C		←

N.C: No Connection

CAUTION
(*1) The No. 10 pin is not connected internally to the No. 13 pin and No. 29 pin.
(*2) The No. 13 pin and the No. 29 pin are connected internally.

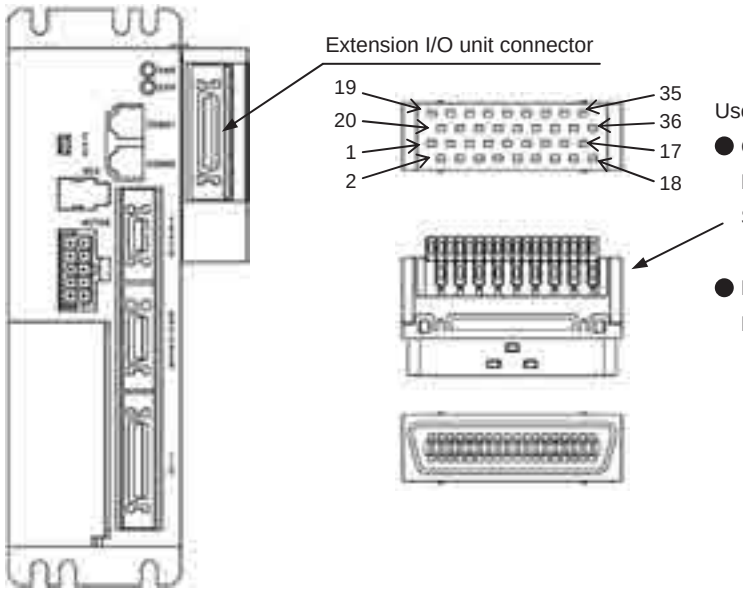

Use the accessory connector.

● Cable side connector model No.

Plug	54306-3619 (MOLEX)
Shell kit	54331-0361 (MOLEX)

● Panel side connector model No.

Receptacle	52986-3621 (MOLEX)

Applicable wire size : AWG24 (0.22 mm^2)

General purpose output circuit (common to NPN and PNP outputs)

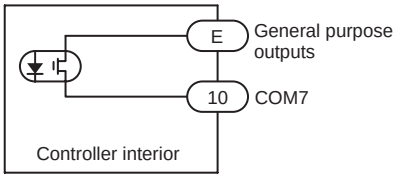

1) E: OUT9 - OUT16
2) Voltage: 24 VDC
3) Current: 50 mA (max.)
4) Photo coupler insulation
5) Photo MOS relay output

General purpose input circuit (common to NPN and PNP inputs)

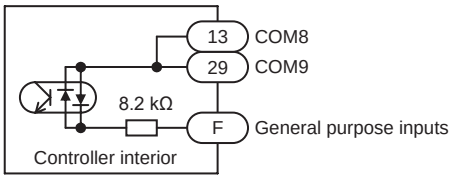

1) F: IN9 - IN32
2) Voltage: 24 VDC
3) Current: 3 mA
4) Photo coupler insulation

CAUTION

● The extension I/O unit output circuit is photo MOS relay output. This is common between NPN output specifications and PNP output specifications.
● The extension I/O unit input circuit is common between NPN input specifications and PNP input specifications.
● This device has no I/O power supply output (24 VDC). You must request it from a third party supplier.
● General purpose I/O can be used as the I/O signal of various systems depending on the mode settings.

CC-Link unit

CC-Link (Control & Communication Link) is a field network interface that enables reduction of wiring and high speed data communication. Data communication of each I/O, coordinate table, status, and JOG operation can be performed through the CC-Link interface.
(Note) Mounting cannot be performed by the customer.

KCA-25-M10-*CC

[Interface specifications]

Descriptions	Specifications
Transmission specifications	CC-Link Ver1.10
Communication speed	10 M/5 M/2.5 M/625 k/156 kbps (change settings from parameters)
Station	Remote device station
Number of occupied stations	4 fixed stations (RX/RY each 128 points, RWw/RWr each 16 points)
Station No. setting	1 to 64 (set by parameters)
Number of I/O points	System input 4 points/system output 4 points
	General purpose input 64 points/general purpose output 64 points
	JOG input 8 points/JOG output 8 points
	Handshake input 1 point/handshake output 2 points
	Data selection input 4 points/data selection confirmation output 4 points
Data communication function	Coordinate table transmission and reception, current position monitor, error code request, status request et.

*) I/O are in the direction viewed from the robot controller side

[I/O signal list]

Signal direction CC-Link master(scanner) ← KCA-25-M10-*CC	
Device No. (input)	Signal name
RXn0	Operation output
RXn1	Abnormal output
RXn2	Positioning completion output
RXn3	Origin return completion output
RXn4 to RXn7	Use prohibited
RXn8 to RXnF	General purpose output ports 1-1 to 8
RX(n+1)0 to RX(n+1)7	General purpose output ports 2-1 to 8
RX(n+1)8 to RX(n+1)F	General purpose output ports 3-1 to 8
RX(n+2)0 to RX(n+2)7	General purpose output ports 4-1 to 8
RX(n+2)8 to RX(n+2)F	General purpose output ports 5-1 to 8
RX(n+3)0 to RX(n+3)7	General purpose output ports 6-1 to 8
RX(n+3)8 to RX(n+3)F	General purpose output ports 7-1 to 8
RX(n+4)0 to RX(n+4)7	General purpose output ports 8-1 to 8
RX(n+4)8 to RX(n+4)F	JOG output
RX(n+5)0 to RX(n+5)7	Reserve (*2)
RX(n+5)8 to RX(n+5)F	
RX(n+6)0 to RX(n+6)7	
RX(n+6)8	Command complete (*3)
RX(n+6)9	Command error (*3)
RX(n+6)A to RX(n+6)B	Use prohibited
RX(n+6)C to RX(n+6)F	Data selection confirmation output
RX(n+7)0 to RX(n+7)7	Use prohibited
RX(n+7)8 to RX(n+7)F	Use prohibited

Signal direction CC-Link master(scanner) → KCA-25-M10-*CC (*1)	
Device No. (output)	Signal name
RYn0	Origin return input
RYn1	Start input
RYn2	Stop input
RYn3	Reset input
RYn4 to RYn7	Use prohibited
RYn8 to RYnF	General purpose input ports 1-1 to 8
RY(n+1)0 to RY(n+1)7	General purpose input ports 2-1 to 8
RY(n+1)8 to RY(n+1)F	General purpose input ports 3-1 to 8
RY(n+2)0 to RY(n+2)7	General purpose input ports 4-1 to 8
RY(n+2)8 to RY(n+2)F	General purpose input ports 5-1 to 8
RY(n+3)0 to RY(n+3)7	General purpose input ports 6-1 to 8
RY(n+3)8 to RY(n+3)F	General purpose input ports 7-1 to 8
RY(n+4)0 to RY(n+4)7	General purpose input ports 8-1 to 8
RY(n+4)8 to RY(n+4)F	JOG input
RY(n+5)0 to RY(n+5)7	Reserve (*2)
RY(n+5)8 to RY(n+5)F	
RY(n+6)0 to RY(n+6)7	
RY(n+6)8	Command request (*3)
RY(n+6)9	Use prohibited
RY(n+6)A to RY(n+6)B	Use prohibited
RY(n+6)C to RY(n+6)F	Data selection input
RY(n+7)0 to RY(n+7)7	Use prohibited
RY(n+7)8 to RY(n+7)F	Use prohibited

CAUTION

n: Addresses assigned to KCA-25-M10-*CC by station No. setting.
(*1) When there is interference with the CC-Link communication, set the stop input to 1 and other input to 0. However, stop input will also be cleared to 0 during T/P operation.
(*2) A reservation area for extending future functions.
(*3) Data communication handshake signal

[CC-Link description]

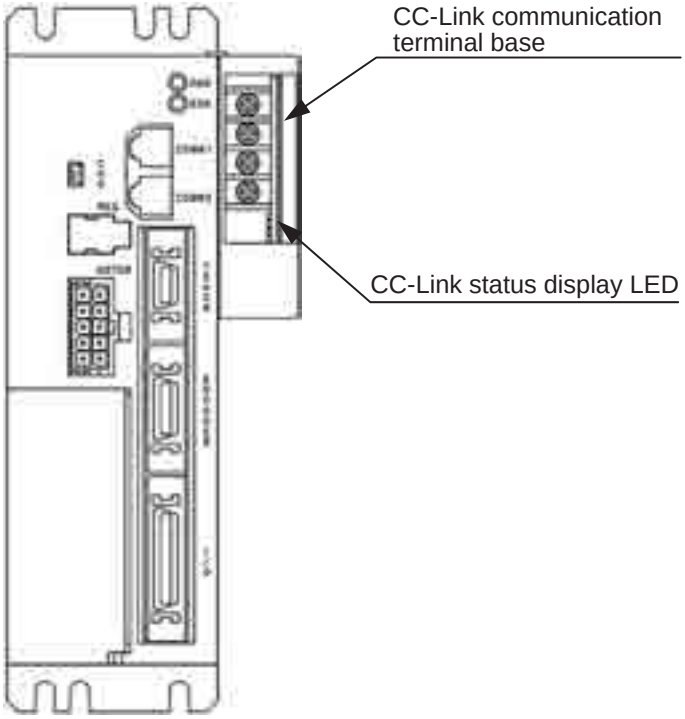

[CC-Link status display LED]

Name	Color	ON/OFF	Content
RD	Green	ON	Receiving data
		OFF	Not receiving data
SD	Green	ON	Transmitting data
		OFF	Not transmitting data
ERR	Red	ON	CRC error, abnormal speed, abnormal station No. setting
		OFF	Operating normally
RUN	Green	ON	Operating normally
		OFF	Timeout or network stopped

CC-Link status display LED section

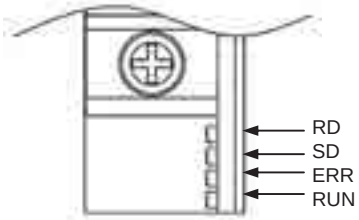

[CC-Link communication terminal base]

Used to connect the CC-Link dedicated cable for data link.

Pin No.	Signal name	Wire color
1	Communication line (DA)	Blue
2	Communication line (DB)	White
3	Digital GND (DG)	Yellow
4	Shield (SLD)	Shield

CC-Link communication terminal base section

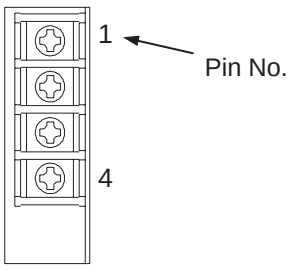

DeviceNet unit

DeviceNet is a field network interface that enables reduction of wiring, lowered costs and high speed data communication.
Data communication of each I/O and JOG operation can be performed through the DeviceNet interface.
(Note) Mounting cannot be performed by the customer.

KCA-25-M10-*DC

[Interface specifications]

Descriptions	Specifications		
Communication protocol	DeviceNet compliant		
Support connection	I/O connection (polling)		
Communication speed	125 k/250 k/500 kbps (set by parameters)		
Station No. setting	0 to 63 (set by parameters)		
Cable length	Communication speed	Thick cable	Thin cable
	125 k	500 m	100 m
	250 k	250 m	
	500 k	100 m	
Number of occupied points	Transmission: 128 points Reception: 128 points		
Number of I/O points (*1)	System input 4 points/system output 4 points		
	General purpose input 64 points/general purpose output 64 points		
	JOG input 8 points/JOG output 8 points		
Vendor ID	733 (TOSHIBA-MACHINE CO., LTD.)		
Device	0 (Generic Device)		
Product code	11 (KCA-25-M10-*DC)		

(*1) I/O are in the direction viewed from the robot controller side

[I/O signal list]

Signal direction DeviceNet master(scanner) ← KCA-25-M10-*DC	
Input device No. (Offset *2)	Signal name
+0	Operation output
+1	Abnormal output
+2	Positioning completion output
+3	Origin return completion output
+4 to +7	Use prohibited
+8 to +15	General purpose output ports 1-1 to 8
+16 to +23	General purpose output ports 2-1 to 8
+24 to +31	General purpose output ports 3-1 to 8
+32 to +39	General purpose output ports 4-1 to 8
+40 to +47	General purpose output ports 5-1 to 8
+48 to +55	General purpose output ports 6-1 to 8
+56 to +63	General purpose output ports 7-1 to 8
+64 to +71	General purpose output ports 8-1 to 8
+72 to +79	JOG output
+80 to +127	Reserve (*3)

Signal direction DeviceNet master(scanner) → KCA-25-M10-*DC (*1)	
Output device No. (Offset *2)	Signal name
+0	Origin return input
+1	Start input
+2	Stop input
+3	Reset input
+4 to +7	Use prohibited
+8 to +15	General purpose input ports 1-1 to 8
+16 to +23	General purpose input ports 2-1 to 8
+24 to +31	General purpose input ports 3-1 to 8
+32 to +39	General purpose input ports 4-1 to 8
+40 to +47	General purpose input ports 5-1 to 8
+48 to +55	General purpose input ports 6-1 to 8
+56 to +63	General purpose input ports 7-1 to 8
+64 to +71	General purpose input ports 8-1 to 8
+72 to +79	JOG input
+80 to +127	Reserve (*3)

CAUTION

(*1) When there is interference with the DeviceNet communication, set the stop input to 1 and other input to 0. However, stop input will also be cleared to 0 during T/P operation.
(*2) The amount of offset from the lead device. (Unit: bits)
(*3) A reservation area for extending future functions (fix at 0).

[DeviceNet description]

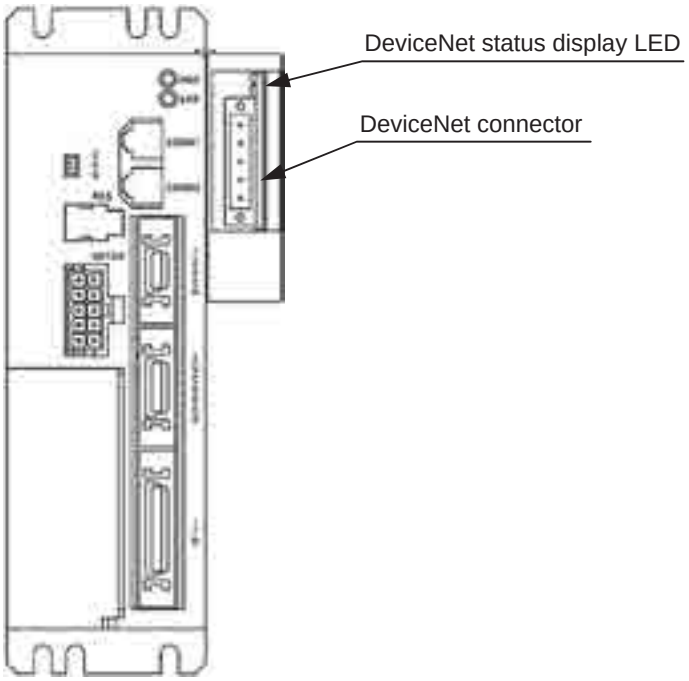

DeviceNet status display LED section

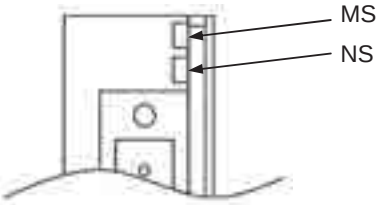

[DeviceNet status display LED]

Name	Color	ON/OFF		Causes/countermeasures
MS	Green	● ON	Normal	Normal operation
		★ Blinking	Status not set	KCA-25-M10 set value error. Confirm settings and restart. May also be on standby. Confirm that the master(scanner) unit is operating normally.
	Red	● ON	Catastrophic failure	Indicates a serious error. (DPRAM, internal ROM, internal RAM, EEPROM, CAN error, WDT error, etc.) Restart. In the event of another occurrence, replace the unit.
		★ Blinking	Minor failure	User settings are abnormal and user side timeout interruption has occurred. Reconfirm settings and restart.
	-	○ OFF	No power supply	Power is not being supplied, the unit is initializing, etc. Confirm power supply.
NS	Green	● ON	Normal	The unit is online and at least one connection has been established.
		★ Blinking	Awaiting connection	Master(Scanner) unit is not operating normally. (This includes configuration errors in the I/O area of the master(scanner) unit.) Confirm that the master(scanner) unit is operating normally.
	Red	● ON	Catastrophic communication error	Indicates a communication error. (Node address overlap, busoff detection, communication speed inconsistency, etc.) Confirm connection status, noise conditions, node address setting, communication speed setting, etc. and restart.
		★ Blinking	Minor communication error	Communication with the master(scanner) unit has timed out. Confirm master(scanner) unit status, connection status, noise conditions, node address setting, communication speed setting, etc. and restart.
	-	○ OFF	No power supply	Indicates WDT error, baud rate check, node address overlap, lack of power supply, etc. Confirm power supply.

* ★ Blinking is when the indicator lights ON and OFF in 0.5 second intervals.

[DeviceNet connector]

Used to connect the DeviceNet dedicated cable for data link.

Comes equipped with the controller.

Pin No.	Signal name	Display	Wire color
5	V+	V+	Red
4	CANH	CH	White
3	Shield	dr	Shield
2	CANL	CL	Blue
1	V−	V−	Black

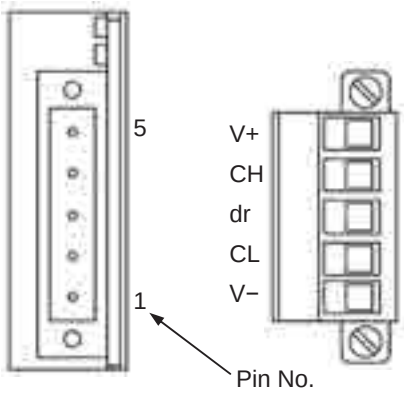

Regenerative discharge unit

[Applications]

The regenerative discharge unit uses resistance to absorb the excess energy generated when the shaft body motor decelerates.
Used when the load inertia exceeds the allowable value, or when a heavy load is lowered over a long stroke on the Z-axis (generating excessive power).
(The unit prevents overvoltage generated in the controller.)

[KCA-25 regenerative discharge unit]

How to order

KCA - ABSU - 2 - 000

Ⓐ Motor capacity

Code	Content
Ⓐ Motor capacity	
2	50 to 200 W (applicable controller: KCA-25-M10, KCA-25-S10)
4	400 W (applicable controller: KCA-25-M40, KCA-25-S40)
8	750 W (applicable controller: KCA-25-M80, KCA-25-S80)

[Specifications]

Descriptions		Content		
Type		KCA-ABSU-2000	KCA-ABSU-4000	KCA-ABSU-8000
Regenerative working voltage		420 VDC	390 VDC	421 VDC
Applicable controller		KCA-25-M10, KCA-25-S10	KCA-25-M40, KCA-25-S40	KCA-25-M80, KCA-25-S80
Cooling method		Natural air cooling	Forced air cooling (using a cooling fan)	
Cooling fan specifications		-	24 VDC - 0.19 A Brushless DC motor	24 VDC - 0.1 A Brushless DC motor
Protection function		Temperature relay operates at a discharge resistance temperature of 150°C. Output contact: 1b Contact capacity: 125 VAC/4 A, 250 VAC/4 A		Temperature relay operation at a discharge resistance temperature of 150°C. Output contact: 1b Contact capacity: 125 VAC/6 A, 250 VAC/3 A
Ambient conditions	Installation location	Indoors		
	Operating ambient temperature range	0 to 40°C		
	Ambient humidity range	30% to 90% RH (no condensation)		
	Storage temperature range	−20 to 70°C		
	Storage humidity range	30% to 90% RH (no condensation)		
	Environment	Indoors (no exposure to direct sunlight) 1,000 m or less above sea level No dirt, dust, or corrosive or flammable gases		
	Vibration	9.8 m/s² or less		
Dimensions		55 (W) × 160 (H) × 122 (D) (Mounting bracket not included)	80 (W) × 189 (H) × 122 (D) Including cooling fan (Mounting bracket not included)	95 (W) × 200 (H) × 169 (D) Including cooling fan
Weight		0.78 kg	0.94 kg	2.9 kg

CAUTION

- When used in combination with a controller other than the applicable controller, the regenerative discharge unit may fail or not operate.

Dimensions

KCA-ABSU-2000

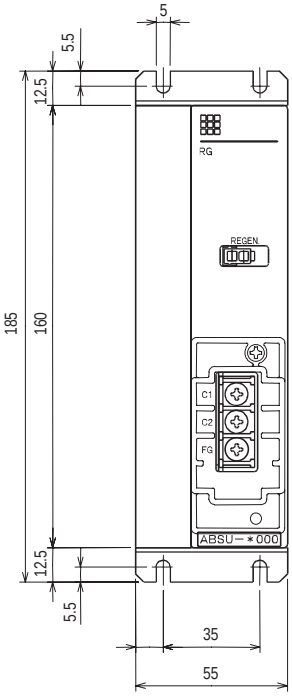

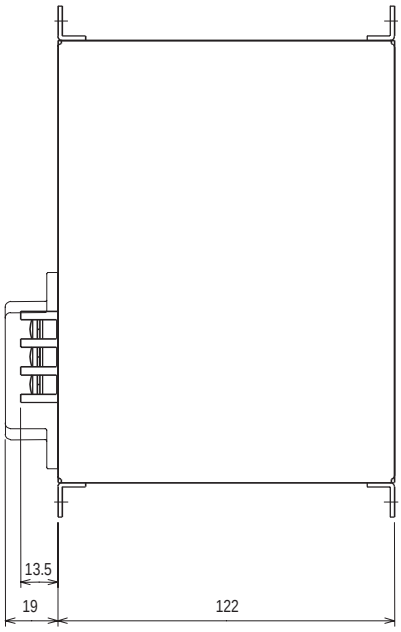

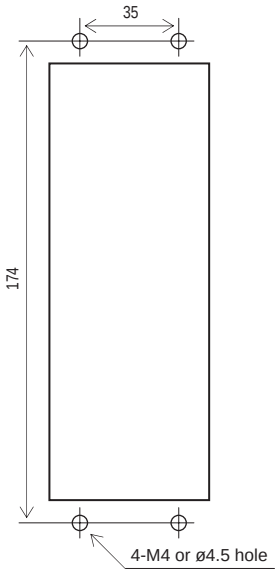

Mounting hole machining dimensions

KCA-ABSU-4000

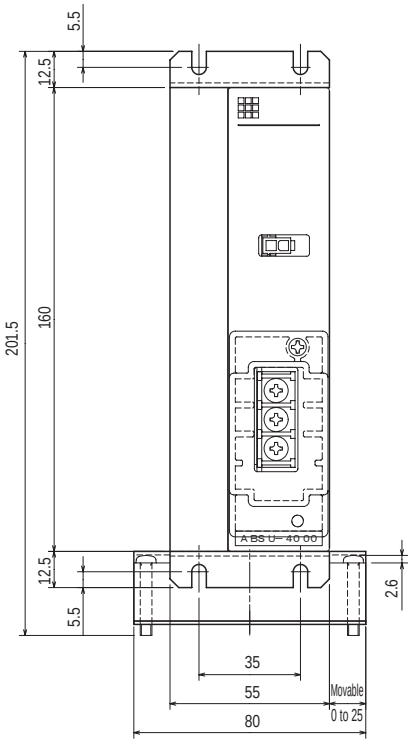

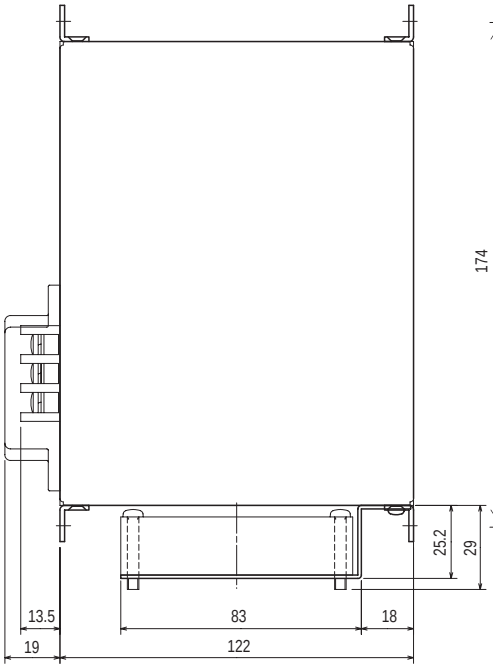

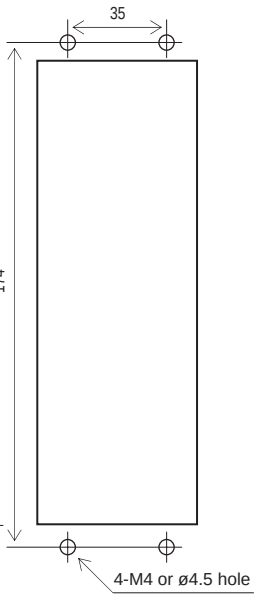

Mounting hole machining dimensions

Dimensions

KCA-ABSU-8000

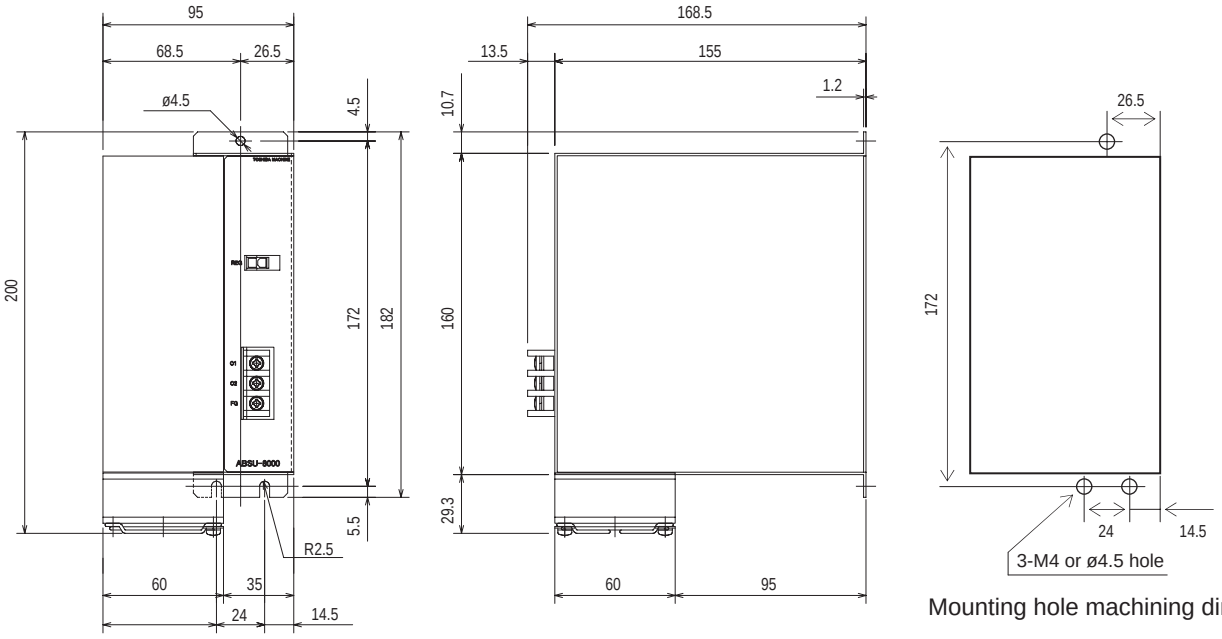

Mounting hole machining dimensions

[Connection example]

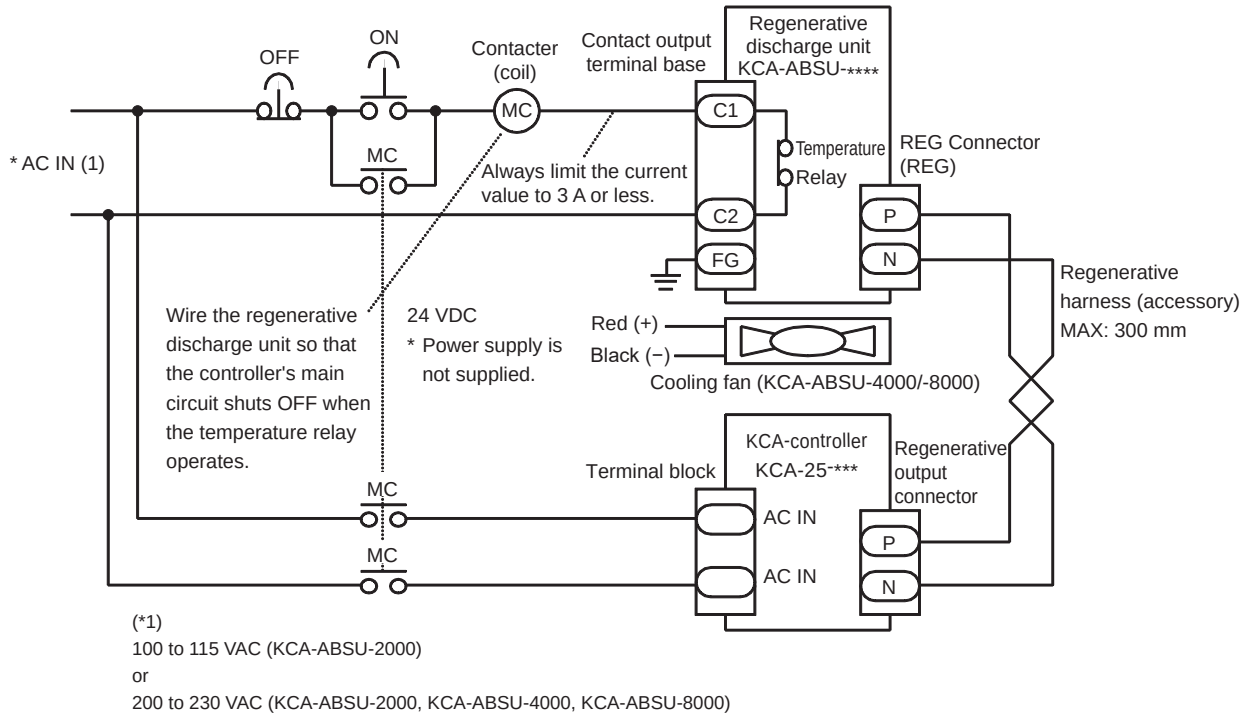

CAUTION Directly connecting the AC input to the C1 and C2 terminals of the regenerative discharge unit causes excessive current flow and may burn out the temperature relay.
Always limit the current value to 3 A or less using the contacter coil.

Handy terminal

[Applications]

When the handy terminal is connected with a controller, it can serve as a program and parameter input device, and can give commands for executing motions including origin establishment, start, stop, jog motion and emergency stop.
The handy terminal also displays and releases an error or fault when it has been generated.

How to order

KCA - TPH - 4C

[Compatible controller]

KCA-25-M10, KCA-25-M40, KCA-25-M80, KCA-01-M05
Conventional model: KCA-10 Series, KCA-20 Series

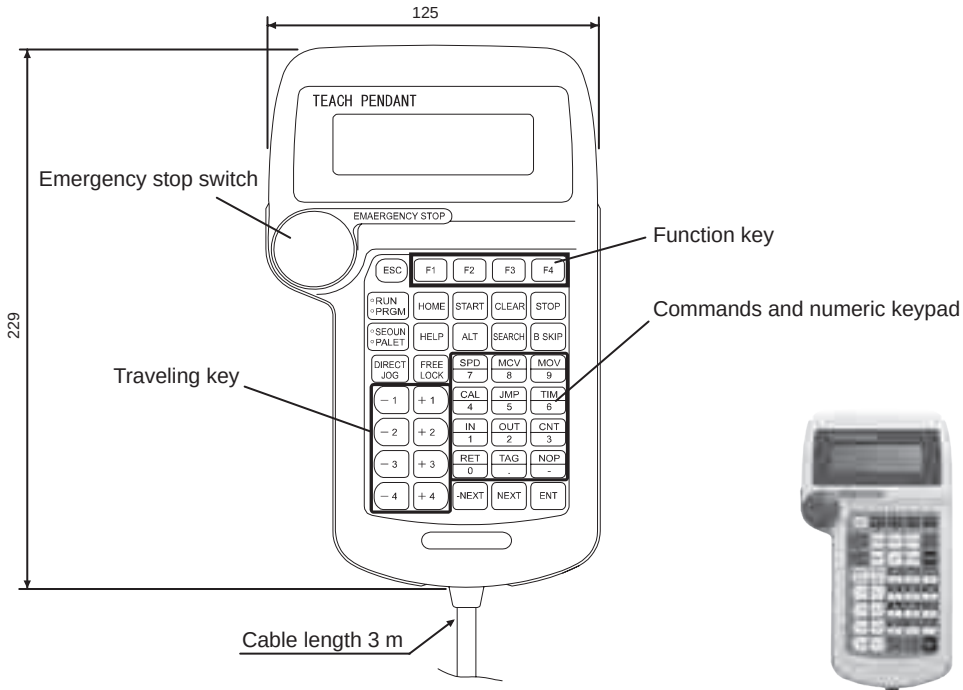

Type: KCA-TPH-4C

*) Compatible with KCA-25 version 2.26 and up.

Link cable

[Applications]

Used for communication between the master(scanner) unit serving as the main controller and the slave(adapter) unit which operates under commands given from the main controller.
This cable is not required when a single axis is controlled and only the master(scanner) unit is used.
This link cable connects the master(scanner) unit with each slave(adapter) unit in series.
Cable length differs when the master(scanner) and slave(adapter) units are mounted closely and when they are installed separately from each other.

How to order

KCA - 10 - LC - A 01

Ⓐ Cable length

Code	Content
Ⓐ Cable length	
01	150 mm
03	300 mm
10	1000 mm

* A link cable must not be bundled together with other signal cables or run in the same wire duct where other cables run.
* A link cable is equipped with plugs on both ends. It cannot be cut or reworked.

Dimensions

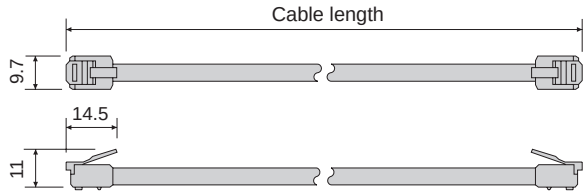

Cable length (mm)
150
300
1000

I/O cable

[Applications]

Used to connect a controller (master(scanner), slave(adapter)) or an I/O port of an extension I/O unit to transmit signals with an external operation panel or control device.
A plug is attached to one side of the cable, which can be connected directly to the controller.
The I/O cable should be connected to an external device according to the color marking put on the core wire and the sign table.
Before connecting the external device, the core wire should be treated with a crimp-terminal.

How to order

KCA - 10 - IC - A 30

Ⓐ Cable length

Code	Content
Ⓐ **Cable length**	
30	3000 mm
50	5000 mm

[Connected unit]

KCA-25-M10, KCA-25-M40,
KCA-25-M80, KCA-25-S10,
KCA-25-S40, KCA-25-S80
Extension I/O unit

Dimensions

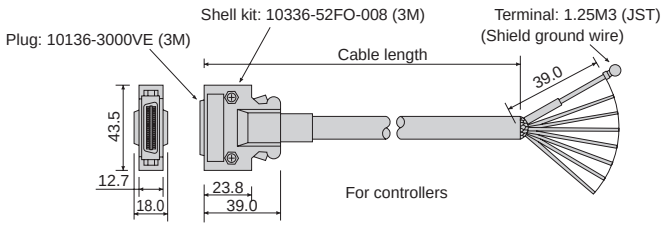

Type	Number of core wires	Core wire size	Covering diameter
KCA-10-IC-A□□	36	0.13 sq	10.5 mm

* The I/O cable is shielded to improve noise resistance.
  Ground the shield wire as necessary.
* The I/O cable is not resistant to repeated bending.

PC software

[Applications]

PC software KCA-SF-98D has been developed to support programming by using a PC as the host computer. It is possible to transfer program data, etc. of the controller to the PC and vice versa, edit and save it, to monitor the I/O status and coordinate values and to execute a program, JOG, origin return, etc. This software is optimized for debugging and maintenance.

How to order

KCA - SF - 98 D

[Compatible controller]

KCA-25-M10, KCA-25-M40, KCA-25-M80, KCA-01-M05
Conventional model: KCA-10 Series, KCA-20 Series

Specifications

Package content		CD-ROM × 1, (communication cable KCA-PCBL-31 sold separately)
Required system configuration	PC body	Serial communication port (D-Sub 9-pin), IBM PC/AT compatible computer equipped with CD-ROM drive Available memory size: 12 MB or over, Available hard disk size: 10 MB or over
	Supported OS	Microsoft Windows 7
	Display	SVGA or over (resolution 800 × 600 pixels or over)
	Printer	Printer which can be connected with your PC and allows printing from Windows
	Communication cable	Used to connect the PC and the controller. Use PCBL-31.
Compatible controllers		KCA-25-M10, KCA-25-M40, KCA-25-M80(*1), KCA-01-M05, Conventional model: KCA-10 Series, KCA-20 Series

* Microsoft Windows and Windows logotype are the registered trademarks or trademarks of Microsoft Corporation in the United States.
*1) Compatible with KCA-25 version 3.1.0 and up.

[Features]

- This software can be used with PCs operating Microsoft Windows 7.
- Programs can be edited easily by using the multi-window screen editor.
- Programs and table data can be sent to and received from the controller. Additionally, such data can be saved as a file.
- Axis motions can be controlled by teaching or program execution.
- At printing of a program (i.e., output to the printer), a title and comment (or annotation) can be included. Thus, this software is very convenient for debugging and confirmation of data.
- Files saved with a conventional model (KCA-10 Series, KCA-20 Series) can be converted to KCA-25 Series files.

● Editing screen of sequential program

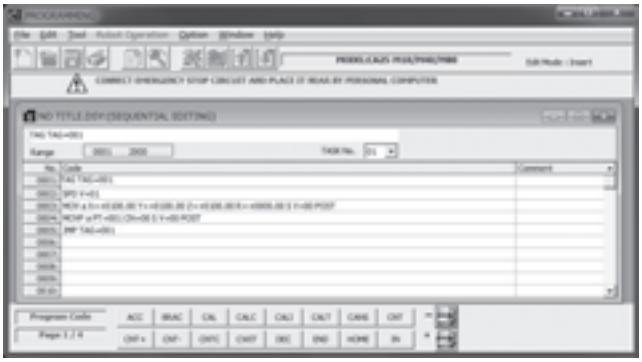

● Editing screen of coordinate table
Data in CSV format as created using Excel, etc. can also be input.

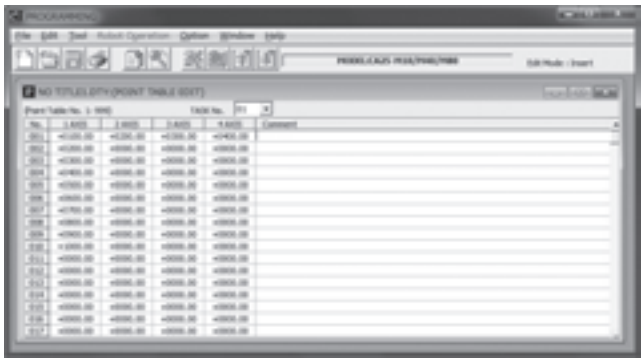

● Operation screen

Operations such as program execution and JOG, which are the same as in the handy terminal, are possible.

● Monitor screen

Current position coordinates and I/O port status can be monitored.

[Connection configuration]

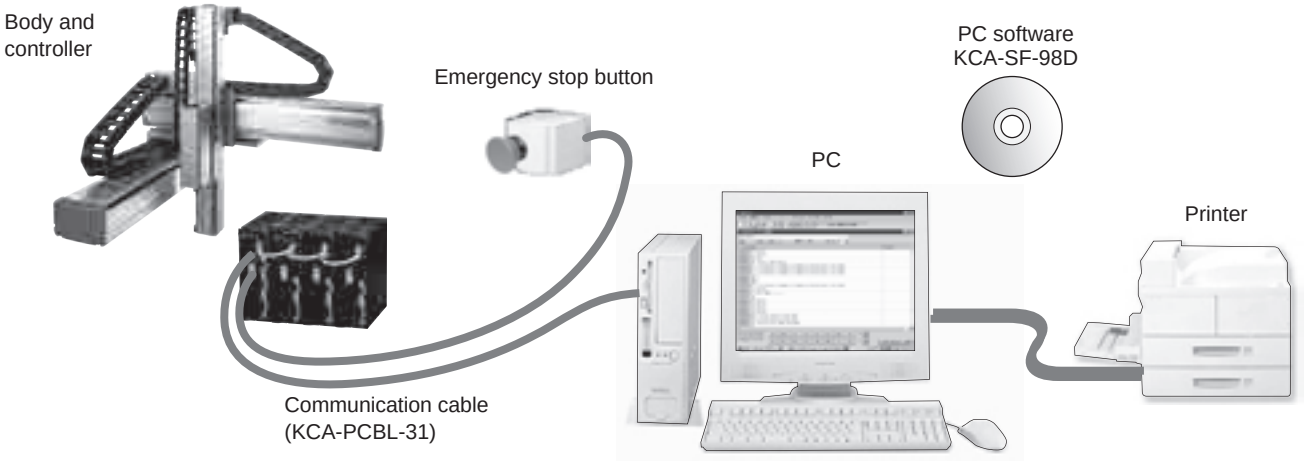

Communication cable (RS-232C)

[Applications]

Communication cable to connect the controller and the PC.
It is used when using the PC software.

How to order

KCA - PCBL - 31

Dimensions

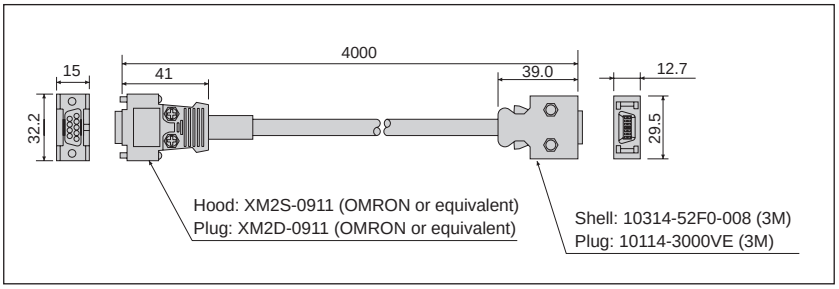

Backup lithium battery for the encoder

[Applications]

Mounted on the controller as a backup battery for an absolute encoder.
One battery each is attached to the master(scanner) unit (KCA-25-M10, KCA-25-M40, KCA-25-M80) and slave(adapter) unit (KCA-25-S10, KCA-25-S40, KCA-25-S80).
Use this battery for replacement or spare purpose.

How to order

KCA - 25 - EB - 05

[Specifications]

Descriptions			Content	Remarks
Part name			Lithium battery	Thionyl chloride lithium battery
Type			KCA-25-EB-05	Battery body: ER6C (made by Hitachi Maxell)
Specifications	Nominal voltage, capacity		3.6 V 1800 mAh	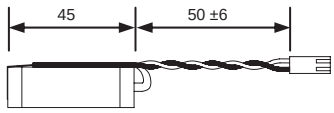
	External	Battery body	ø14.5 × 45 mm (excluding projections)	
		Harness length	50 ±6 mm (excluding connectors)	
	Weight		Approx. 14.5 g	
Backup duration (*1)			Approx. 3 years (*2)	25°C, backup battery 65 μA

CAUTION
(*1) Total time when the controller power is turned OFF.
(*2) Duration of battery varies with the ambient temperature, etc. The value only provides a rough guide.

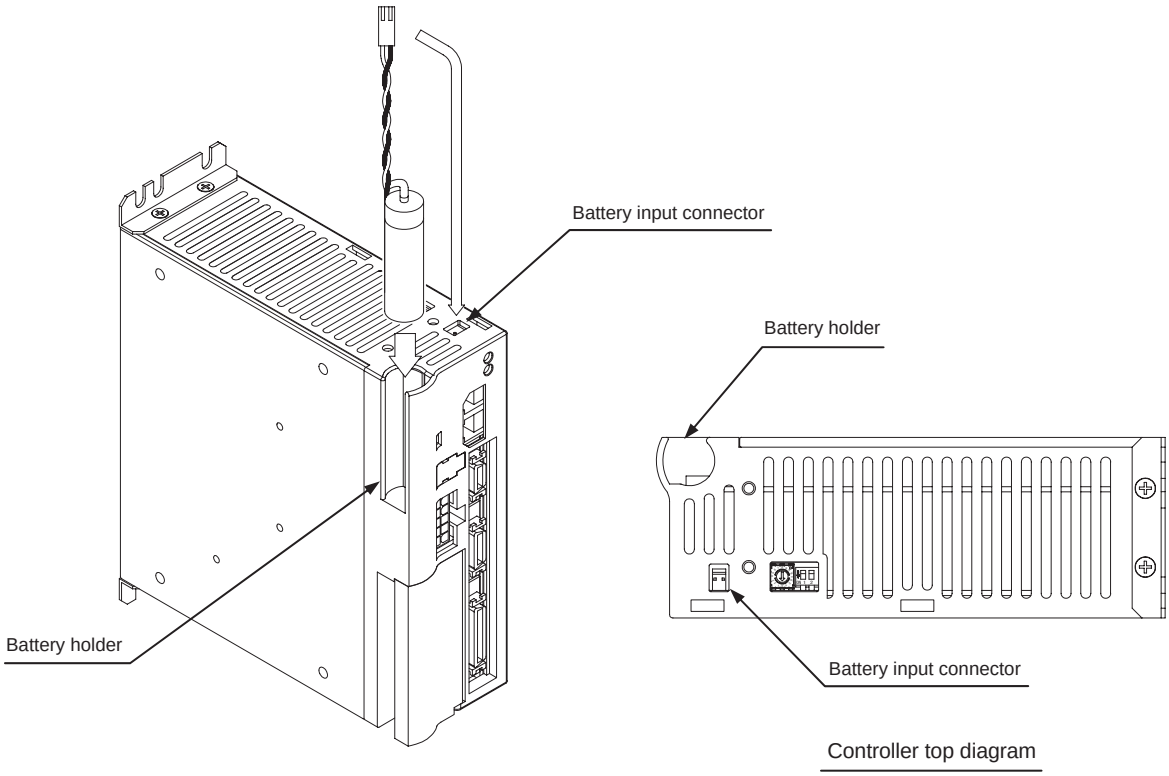

[KBZ Series control parts]

Master(Scanner) unit
KCA-01-M05

Page 204

High function master(scanner) unit
KCA-20-M00

Page 207

Slave(Adapter) unit
KCA-01-S05

Page 212

Regenerative discharge unit
KCA-CAR-UN50

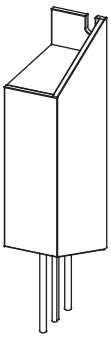

Page 216

Regenerative discharge resistance
KCA-CAR-0500

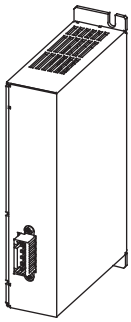

Page 216

Handy terminal
KCA-TPH-4C

Page 197

PC software
KCA-SF-98D

Page 199

MEMO

Master(Scanner) unit

[Main functions]

* A KBZ Series dedicated single axis controller.
* The controller is operated by designating a point table with a 4-point input signal and inputting the start signal.
* The point table is composed of 12 types of data, including coordinate values, speed table No., acceleration/deceleration No., torque limit table No., etc.
* Gain adjustments, etc. are automatically set by inputting robot type parameter settings.
* JOG operation enabled through input signal (changing the coordinate values using this function is also possible).
* The 3-color LED displays the error status.
* A break release switch was added to the controller for safety purposes.

How to order

KCA - 01 - M 05

KCA-01-M05

[System configuration]

Basic unit Function extension unit

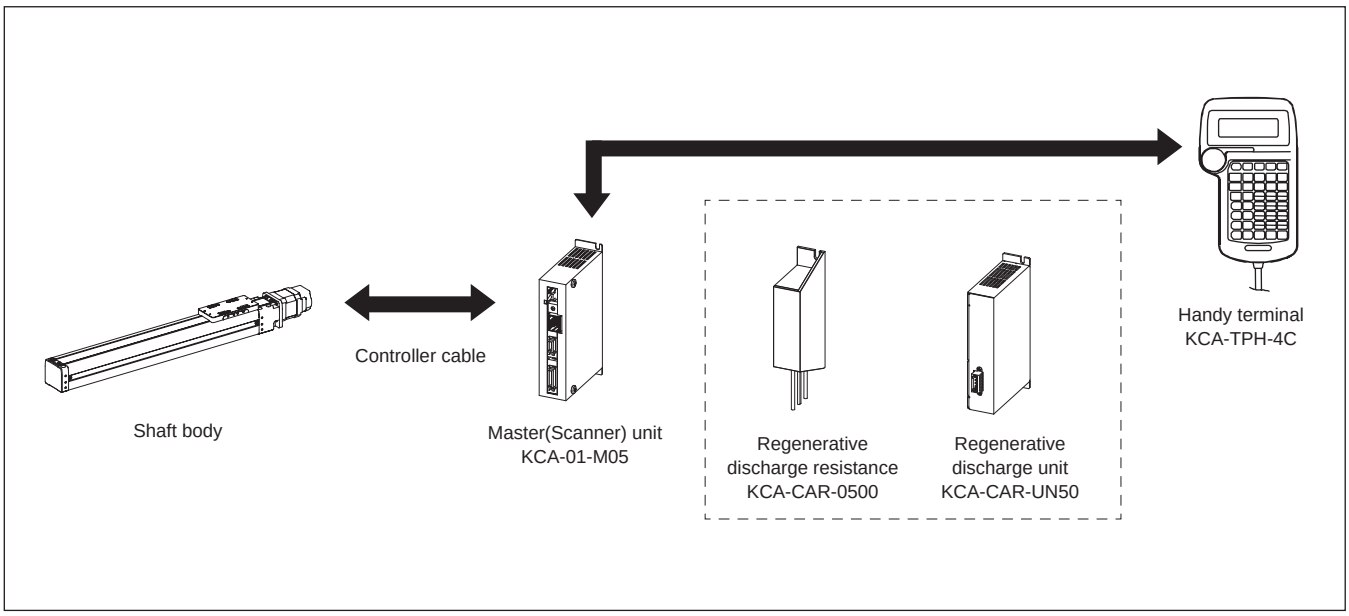

[General specifications]

Applicable robot		KBZ Series
Controller		KCA-01-M05
No. of control axes		1-axis
Motor capacity		50 W
Control method		Semi-closed loop function
Instruction method		Remote teaching Direct teaching or MDI
Speed setting		8 stages (changeable)
Acceleration/deceleration setting		8 stages (changeable)
Number of point tables		15
Memory		EEPROM (Number of times rewritable: 100)
Traveling mode		Point mode
Special function		Torque limit function
Emergency stop input		Yes
Origin sensor input		Yes
Regenerative function		Yes (external mounted regenerative resistance)
Dynamic brake function		None
Mechanical brake drive output		24 VDC to less than 0.4 A (For non-excitation brake) Brake release switch (SW1) enables forced release
Protection function	Hard error	Sensor abnormality, drive power supply abnormality, EEPROM abnormality, overheating, etc.
	Soft error	Acceleration, overload, excessive position deviation, etc.
	Warning	Drive power supply stoppage
Dimensions		31 (W) × 146 (H) × 89 (D) (Excluding screw projections)

Status display	Status LED (LED1) display Servo OFF..... green (steady light) Servo ON..... green (blinking) Normal mode Drive power supply OFF.... orange (steady light) (Set SW2 to "0") Battery power supply low..... orange (blinking) Power supply shutoff request OFF.... red (steady light) Error..... red + green (blinking)	
System input	24 V 7 mA 10 points	
System output	30 V max., 100 mA max., 8 points	
Communication function	RS-232C × 1 channel (9,600 bps) For PC software KCA-SF-98D	
Control power supply voltage	24 VDC ±10%	
Drive power supply voltage	24 VDC ±10%	
Control power supply capacity	0.25 A	
Drive power supply capacity	Depends on the axis type, Rating 3 A (max. 9 A)	
Ambient conditions	Operating ambient temperature	0 to 40°C
	Operating ambient humidity	90% or less (no condensation)
	Storage ambient temperature	−10 to 85°C
	Storage ambient humidity	90% or less (no condensation)
	Environment	Indoors (no exposure to direct sunlight) No dirt, dust, or corrosive or flammable gases 1,000 m or less above sea level
	Vibration/ impact	4.9 m/s^2 or less/ 19.6 m/s^2 or less
Weight	Approx. 0.25 kg	

[I/O specifications]

Input specification	
Input rating	24 VDC 7 mA
Insulation method	Photo coupler
Power supply	Request from a third party supplier (24 VDC)

Output specifications	
Output style	Transistor output (open collector)
Output capacity	System output max. 100 mA/point * No general purpose output

* Refer to "System I/O Details" on pages 37 and 38 for signal details.
* Refer to page 39 for the emergency stop input and output connection method.

[Input pin No. and signal No.]

Pin No.	Input No.	Signal name	Content
1	-	+COM	Plus common
2	-	+COM	Plus common
3	IN1 (*1)	START	Start input
		+JOG	+JOG input
4	IN2 (*1)	STOP	Stop input
		−JOG	−JOG input
5	IN3	SVON	Servo ON input
6	IN4	WRITE	Writing input
7	IN5	ALRST	Error reset input
8	IN6	RTSEL	Operating/teaching switch input
9	IN7	PIN1	Directive point No. input
10	IN8	PIN2	
11	IN9	PIN3	
12	IN10	PIN8	
13	-	Emergency stop input (+)	

Pin No.	Input No.	Signal name	Content
14	OUT1	RUN	Operation output
15	OUT2 (*2)	ERROR	Abnormal output
	OUT3	RDY/ERR	READY/Abnormal output
16	OUT3	POSI	Positioning completion output
17	OUT4	AREA	Area output
18	OUT5 (*3)	POUT1	Completion point No. output
		TQCON	Torque limit operation output
19	OUT6 (*3)	POUT2	Complete point No. output
		TQLOAD	Load output
20	OUT7 (*3)	POUT4	Complete point No. output
		TQLIM	Limit output
21	OUT8 (*3)	POUT8	Complete point No. output
		TQLOCK	Lock output
22	-	−COM	Minus common
23	-	−COM	Minus common
24	-	N.C.	
25	-		
26	-	Emergency stop input (−)	

(*1) The top cell is the signal in operation, the bottom cell is the signal when teaching.
(*2) Select function with parameter M13.
(*3) The top cell is the signal in normal operation and when teaching, the bottom cell is the signal during torque limit operation.

[Dimensions]

Master(Scanner) unit

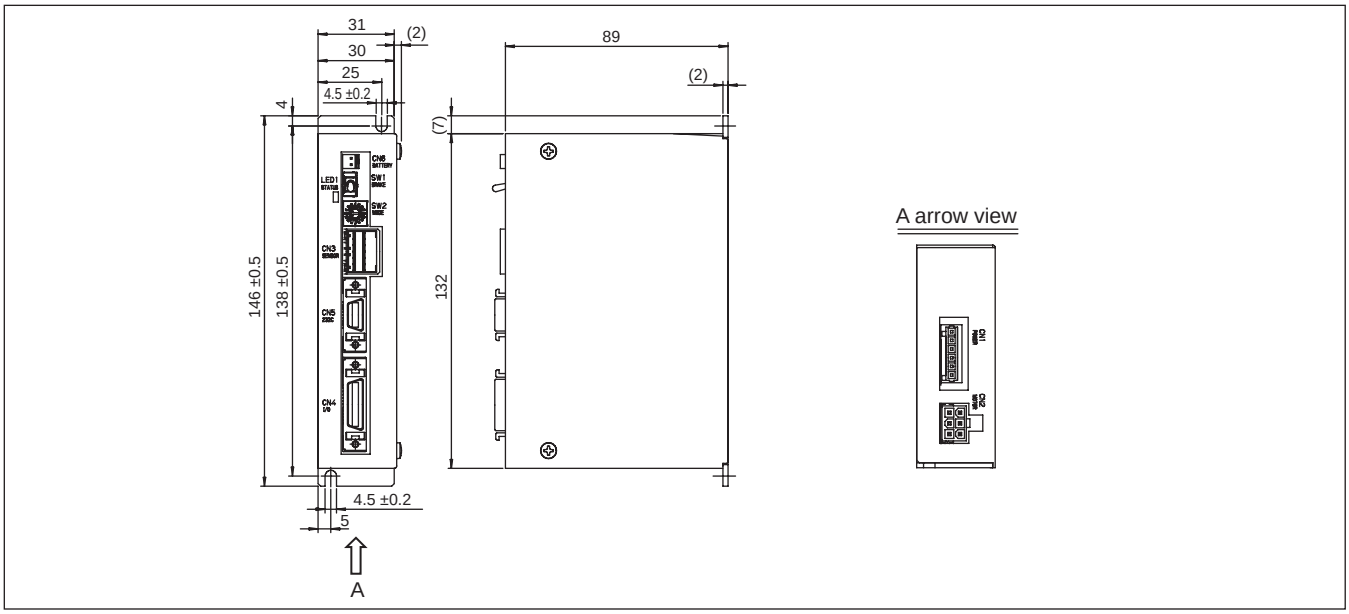

[Section names]

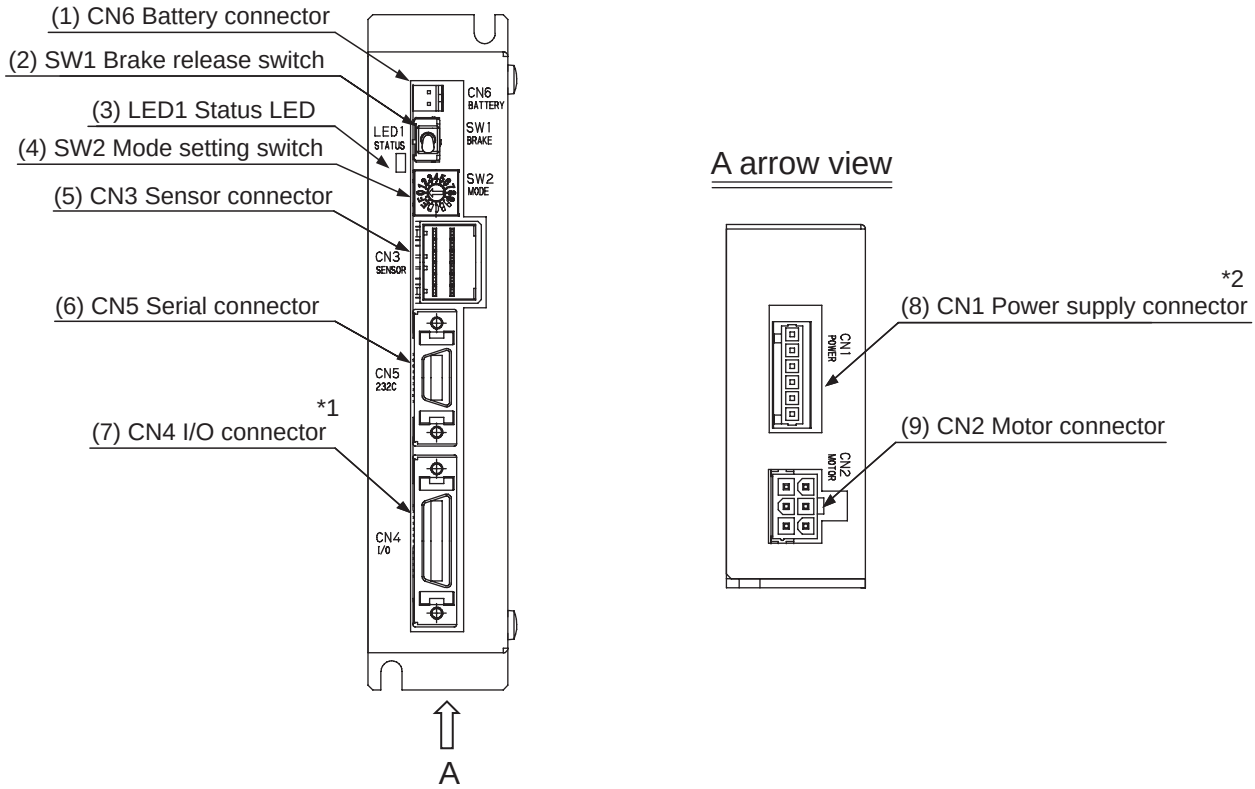

(1) CN6 Battery connector
Used to connect the backup battery for the resolver ABS.

(2) SW1 Brake release switch
A momentary switch used to forcibly release the brake.
While the lever is held up, the brake is forcibly released. When the lever is loosened, the brake returns to normal control.

(3) LED1 Status LED
Displays controller status in 3 colors.

(4) SW2 Mode setting switch
Used to set the operation mode.

*1 Comes equipped with a plug and shell kit.
*2 Comes equipped with a plug and wiring lever.

(5) CN3 Sensor connector
Used to connect motor sensor cables.

(6) CN5 Serial connector
RS-232C connector used for communication cables (option) for handy terminal or PC connection.

(7) CN4 I/O connector
Composed of system I/O and emergency stop input. Used to for external robot control by connecting to the PLC, etc.

(8) CN1 Power supply connector
Used to input control power supply and drive power supply.

(9) CN2 Motor connector
Used to connect motor cables.

High function master(scanner) unit KCA-20-M00

* Max. 4-axis simultaneous control
* CC-Link and DeviceNet can be used as the interface with external devices.
* Data communication of each I/O, coordinate table, status, and JOG operation can be performed through the CC-Link interface.
* Data communication of each I/O and JOG operation can be performed through the DeviceNet interface.
* The unit is equipped with two/three dimensional linear and circular interpolation and a pass function, useful in work for which tracing is important.
* General purpose output control can be turned ON and OFF using the coordinates determined during robot travel. (command: OUTS)
* The target position can be changed to the coordinate data received from RS232C communication mid-transition to the designated coordinates. (command: RSMV)
* In sequential mode, I/O control is equipped with a multitask function for up to 4 tasks. (only one task for axis operation)
* Handy terminal KCA-TPH-4C is used.

How to order

KCA - 20 - M 00 - 0 0

Ⓐ Extension I/F unit

Code	Content
Ⓐ Extension I/F unit	
0	None
C	CC-Link unit
D	DeviceNet unit

KCA-20-M00-00

KCA-20-M00-C0

[General specifications]

Controller	KCA-20-M00
No. of control axes	Control of up to four axes by connecting slave(adapter) units. Simultaneous control
Control method	CP control, PTP control semi-closed loop control
Interpolation function	Three dimensional linear interpolation, three dimensional circular interpolation
Encoder signal	Line driver communication method
Instruction method	Remote teaching, direct teaching, or MDI
Speed/acceleration	Speed 10 stages (changeable) Acceleration 20 stages (changeable)
Operation method	Step, continuous, single acting
Operation mode	Sequential (multitask) (*1) Palletizing, easy External point designation
Number of programs	Sequential: 16, palletizing: 16, easy: 8
Step No.	Max. 2,500 steps (*2)
Coordinate table	Each task: 999
Number of counters	99
Number of timers	9
Memory	FRAM
CPU	32 bit (RISC/CPU SH7085)
Power supply voltage	24 VDC ±10% 0.5 A (external supply)

Self-diagnostic function	CPU error, memory error, driver error, master power voltage error, program error, etc. by watchdog timers
Abnormal display	Abnormal display indicator ON (front panel) Handy terminal display
External input	System input: 4 points/general purpose input: 20 points (*3)
External output	System output: 4 points/general purpose output: 12 points (*3)
Communication function	1CH (RS232C) For handy terminal
External drive power supply	No output power (external supply)
Emergency stop I/O	No power voltage input (contact input), relay C contact Output
Noise resistance	1,500 Vp - p, Pulse width 1 μs (Based on a noise simulator)
Environment conditions	Indoor location, Temperature: 0 to 40°C Humidity: 30 to 90% RH, no condensation No corrosive gas.
Dimensions	65 (W) × 170 (H) × 150 (D) Mounting bracket not included
Weight	1.2 kg (excluding optional base)

(*1) Multitask is for up to four tasks (one task for axis control).
(*2) Varies by mode used.
(*3) Refer to the interface specifications on pages 209 and 210 to select Field/Bus interface specifications.

[I/O specifications]

Input specification	
Input rating	24 VDC 7 mA/point
Insulation method	Photo coupler
Power supply	Request from a third party supplier (24 VDC)

Output specifications	
Output style	Transistor output (open collector)
Output capacity (24 VDC)	System output max. 20 mA/point
	General purpose output max. 300 mA/point

[Input pin No. and signal No.]

Panel side connector pin layout

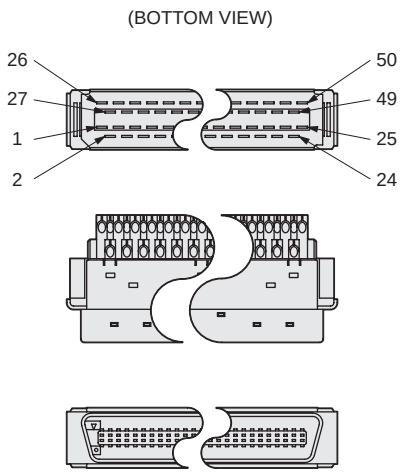

No.	Signal name	No.	Signal name
1	+COM1 (*1)	26	General purpose input port 1-1
2	General purpose output port 1-1	27	General purpose input port 1-2
3	General purpose output port 1-2	28	General purpose input port 1-3
4	General purpose output port 1-3	29	General purpose input port 1-4
5	General purpose output port 1-4	30	General purpose input port 1-5
6	General purpose output port 1-5	31	General purpose input port 1-6
7	General purpose output port 1-6	32	General purpose input port 1-7
8	General purpose output port 1-7	33	General purpose input port 1-8
9	General purpose output port 1-8	34	General purpose input port 2-1
10	General purpose output port 2-1	35	General purpose input port 2-2
11	General purpose output port 2-2	36	General purpose input port 2-3
12	General purpose output port 2-3	37	General purpose input port 2-4
13	General purpose output port 2-4	38	General purpose input port 2-5
14	−COM1 (*1)	39	General purpose input port 2-6
15	−COM1 (*1)	40	General purpose input port 2-7
16	+COM2 (*1)	41	General purpose input port 2-8
17	Operation output	42	General purpose input port 3-1
18	Abnormal output	43	General purpose input port 3-2
19	Positioning completion output	44	General purpose input port 3-3
20	Origin return completion output	45	General purpose input port 3-4
21	Origin return input	46	Emergency stop input
22	Start input	47	Emergency stop input
23	Stop input	48	Emergency stop output (N.O)
24	Reset input	49	Emergency stop output (COM)
25	−COM2 (*1)	50	Emergency stop output (N.C)

(*1): +COM1 is not connected to +COM2, −COM1 and −COM2 internally.
* One plug is attached for I/O connector connection. An I/O cable with plug is also available optionally.

[CC-Link interface specifications]

Descriptions	Specifications
Transmission specifications	CC-Link Ver1.10
Communication speed	10 M/5 M/2.5 M/625 K/156 kbps (set by parameters)
Station	Remote device station
Number of occupied stations	4 fixed stations (RX/RY each 128 points, RWw/RWr each 16 points)
Station No. setting	1 to 61 (set by parameters)
Number of I/O points	System input 4 points/system output 4 points
	General purpose input 64 points/general purpose output 64 points
	JOG input 8 points/JOG output 8 points
	Handshake input 1 point/handshake output 2 points
	Data selection input 4 points/data selection confirmation output 4 points
Data communication function	Coordinate table transmission and reception, current position monitor, error code request, status request et.

* I/O are in the direction viewed from the controller side

[I/O signal list]

Signal direction CC-Link master(scanner) ← KCA-20-M00		Signal direction CC-Link master(scanner) → KCA-20-M00	
Device No. (input)	Signal name	Device No. (output)	Signal name
RXn0	Operation output	RYn0	Origin return input (*2)
RXn1	Abnormal output	RYn1	Start input (*2)
RXn2	Positioning completion output	RYn2	Stop input (*2)
RXn3	Origin return completion output	RYn3	Reset input (*2)
RXn4 to RXn7	Use prohibited	RYn4 to RYn7	Use prohibited
RXn8 to RXnF	General purpose output ports 1-1 to 8	RYn8 to RYnF	General purpose input ports 1-1 to 8 (*2)
RX(n+1)0 to RX(n+1)7	General purpose output ports 2-1 to 8	RY(n+1)0 to RY(n+1)7	General purpose input ports 2-1 to 8 (*2)
RX(n+1)8 to RX(n+1)F	General purpose output ports 3-1 to 8	RY(n+1)8 to RY(n+1)F	General purpose input ports 3-1 to 8 (*2)
RX(n+2)0 to RX(n+2)7	General purpose output ports 4-1 to 8	RY(n+2)0 to RY(n+2)7	General purpose input ports 4-1 to 8
RX(n+2)8 to RX(n+2)F	General purpose output ports 5-1 to 8	RY(n+2)8 to RY(n+2)F	General purpose input ports 5-1 to 8
RX(n+3)0 to RX(n+3)7	General purpose output ports 6-1 to 8	RY(n+3)0 to RY(n+3)7	General purpose input ports 6-1 to 8
RX(n+3)8 to RX(n+3)F	General purpose output ports 7-1 to 8	RY(n+3)8 to RY(n+3)F	General purpose input ports 7-1 to 8
RX(n+4)0 to RX(n+4)7	General purpose output ports 8-1 to 8	RY(n+4)0 to RY(n+4)7	General purpose input ports 8-1 to 8
RX(n+4)8 to RX(n+4)F	JOG output	RY(n+4)8 to RY(n+4)F	JOG input
RX(n+5)0 to RX(n+5)7	Reserve	RY(n+5)0 to RY(n+5)7	Reserve
RX(n+5)8 to RX(n+5)F		RY(n+5)8 to RY(n+5)F	
RX(n+6)0 to RX(n+6)7		RY(n+6)0 to RY(n+6)7	
RX(n+6)8	Command complete (*1)	RY(n+6)8	Command request (*1)
RX(n+6)9	Command error (*1)	RY(n+6)9	Use prohibited
RX(n+6)A to RX(n+6)B	Use prohibited	RY(n+6)A to RY(n+6)B	Use prohibited
RX(n+6)C to RX(n+6)F	Data selection confirmation output	RY(n+6)C to RY(n+6)F	Data selection input
RX(n+7)0 to RX(n+7)7	Use prohibited	RY(n+7)0 to RY(n+7)7	Use prohibited
RX(n+7)8 to RX(n+7)F	Use prohibited	RY(n+7)8 to RY(n+7)F	Use prohibited

n: Addresses assigned to the master(scanner) unit by station No. setting.
(*1) Data communication handshake signal
(*2) System input and general purpose input ports 1 to 3 are selected for use by parameter.

[CC-Link status display LED]

Name	Color	ON/OFF	Content
RUN	Green	ON	Operating normally
		OFF	Timeout or network stopped
ERR	Red	ON	CRC error, abnormal speed, abnormal station No. setting
		OFF	Operating normally
SD	Green	ON	Transmitting data
		OFF	Not transmitting data
RD	Green	ON	Receiving data
		OFF	Not receiving data

[DeviceNet interface specifications]

Descriptions	Specifications		
Communication protocol	DeviceNet compliant		
Support connection	I/O connection (polling)		
Communication speed	125 k/250 k/500 kbps (set by parameters)		
Station No. setting	0 to 63 (set by parameters)		
Cable length	Communication speed	Thick cable	Thin cable
	125 k	500 m	100 m
	250 k	250 m	
	500 k	100 m	
Number of occupied points	Transmission: 128 points Reception: 128 points		
Number of I/O points	System input 4 points/system output 4 points		
	General purpose input 64 points/general purpose output 64 points		
	JOG input 8 points/JOG output 8 points		
Device	0 (Generic Device)		

* I/O are in the direction viewed from the controller side

[I/O signal list]

Signal direction DeviceNet master(scanner) ← KCA-20-M00		Signal direction DeviceNet master(scanner) → KCA-20-M00 (*1)	
Input device No. (offset *2)	Signal name	Output device No. (offset *2)	Signal name
+0	Operation output	+0	Origin return input (*3)
+1	Abnormal output	+1	Start input (*3)
+2	Positioning completion output	+2	Stop input (*3)
+3	Origin return completion output	+3	Reset input (*3)
+4 to +7	Use prohibited	+4 to +7	Use prohibited
+8 to +15	General purpose output ports 1-1 to 8	+8 to +15	General purpose input ports 1-1 to 8 (*3)
+16 to +23	General purpose output ports 2-1 to 8	+16 to +23	General purpose input ports 2-1 to 8 (*3)
+24 to +31	General purpose output ports 3-1 to 8	+24 to +31	General purpose input ports 3-1 to 8 (*3)
+32 to +39	General purpose output ports 4-1 to 8	+32 to +39	General purpose input ports 4-1 to 8
+40 to +47	General purpose output ports 5-1 to 8	+40 to +47	General purpose input ports 5-1 to 8
+48 to +55	General purpose output ports 6-1 to 8	+48 to +55	General purpose input ports 6-1 to 8
+56 to +63	General purpose output ports 7-1 to 8	+56 to +63	General purpose input ports 7-1 to 8
+64 to +71	General purpose output ports 8-1 to 8	+64 to +71	General purpose input ports 8-1 to 8
+72 to +79	JOG output	+72 to +79	JOG input
+80 to +127	Reserve	+80 to +127	Reserve

(*1) When there is interference with the DeviceNet communication, set the stop input to 1 and other input to 0.
However, stop input will also be cleared to 0 during T/P operation.
(*2) The amount of offset from the lead device. (Unit: bit)
(*3) System input and general purpose input ports 1 to 3 are selected for use by parameter.

[DeviceNet status display LED]

Name	Color	ON/OFF		Causes/countermeasures
MS	Green	● ON	Normal	Normal operation
		★ Blinking	Status not set	Master(Scanner) unit set value error. Confirm settings and restart. May also be on standby. Confirm that the master(scanner) unit is operating normally.
	Red	● ON	Catastrophic failure	Indicates a serious error. (DPRAM, internal ROM, internal RAM, EEPROM, CAN error, WDT error, etc.) Restart. In the event of another occurrence, replace the unit.
		★ Blinking	Minor failure	User settings are abnormal and user side timeout interruption has occurred. Reconfirm settings and restart.
	Green/Red	○ OFF	No power supply	Power is not being supplied, the unit is initializing, etc. Confirm power supply.
NS	Green	● ON	Normal	The unit is online and at least one connection has been established.
		★ Blinking	Waiting for connection	Master(Scanner) unit is not operating normally. (This includes configuration errors in the I/O area of the master(scanner) unit.) Confirm that the master(scanner) unit is operating normally.
	Red	● ON	Catastrophic communication error	Indicates a communication error. (Node address overlap, busoff detection, communication speed inconsistency, etc.) Confirm connection status, noise conditions, node address setting, communication speed setting, etc. and restart.
		★ Blinking	Minor communication error	Communication with the master(scanner) unit has timed out. Confirm master(scanner) unit status, connection status, noise conditions, node address setting, communication speed setting, etc. and restart.
	Green/ Red	○ OFF	No power supply	Indicates WDT error, baud rate check, node address overlap, lack of power supply, etc. Confirm power supply.

* The LED indicator lights ON for 0.5 seconds, and OFF for 0.5 seconds.

Dimensions

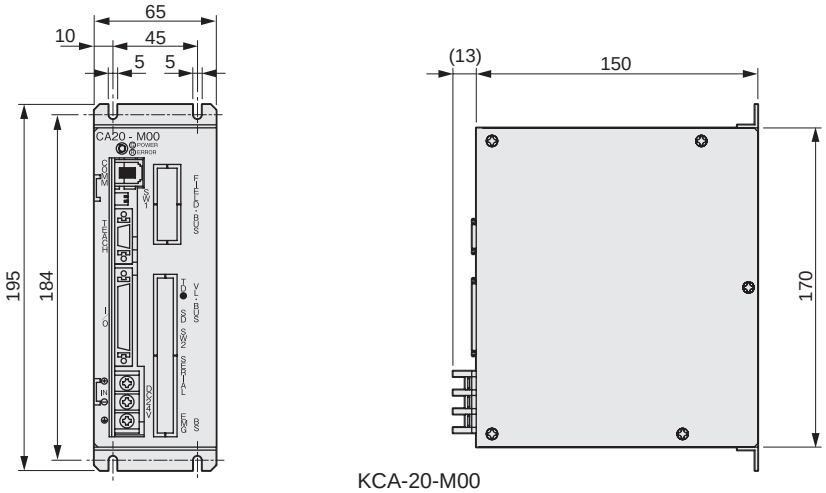

KCA-20-M00

[Section names]

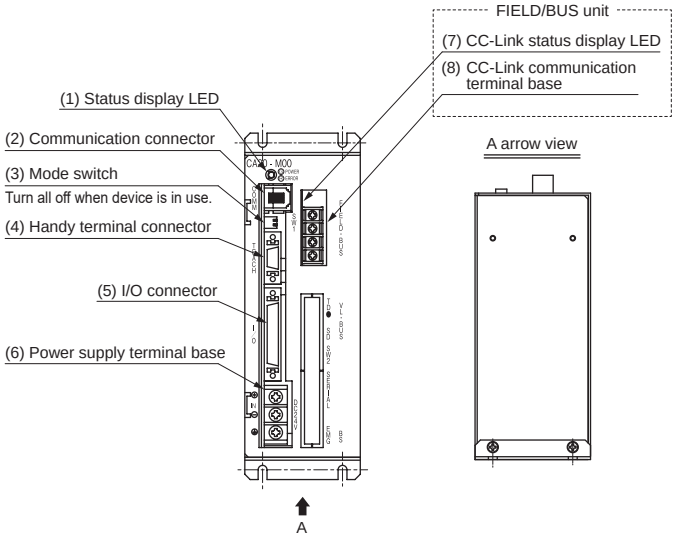

KCA-20-M00-C0

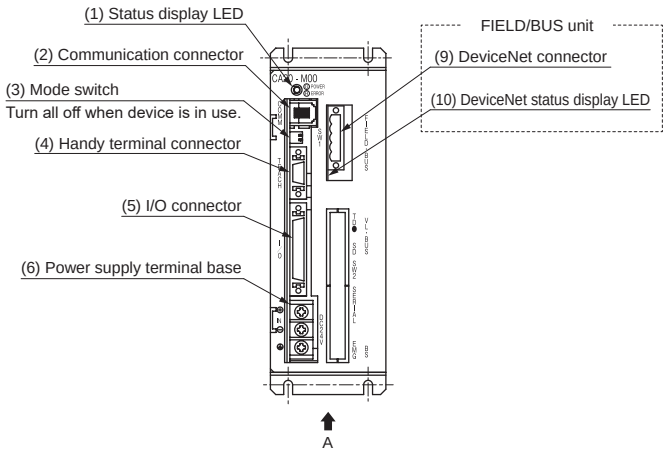

KCA-20-M00-D0

(1) Status display LED
Displays the controller status. When the power is turned on, it lights in green. In case of an error, it lights in red.

(2) Communication connector
Used to connect link cables for slave(adapter) unit connection.

(3) Mode switch
Not used on this device. Turn all OFF when device is in use.

(4) Handy terminal connector
Used to connect communication cables (option) for handy terminal or PC connection.

(5) I/O connector
Connect exterior control components (PLC, etc.).

(6) Power supply terminal base
A power supply input terminal and FG (frame ground) terminal are equipped.

(7) CC-Link status display LED (option)
Displays CC-Link status.

(8) CC-Link communication terminal base (option)
Used to connect the CC-Link dedicated cable for data link.

(9) DeviceNet connector (option)
Used to connect the DeviceNet dedicated cable for data link.

(10) DeviceNet status display LED (option)
Displays DeviceNet status.

Slave(Adapter) unit

[Main function]

* Can be connected to a KBX Series controller.

KCA-01-S05

How to order

KCA - 01 - S 05

[System configuration]

● KCA-20-M00

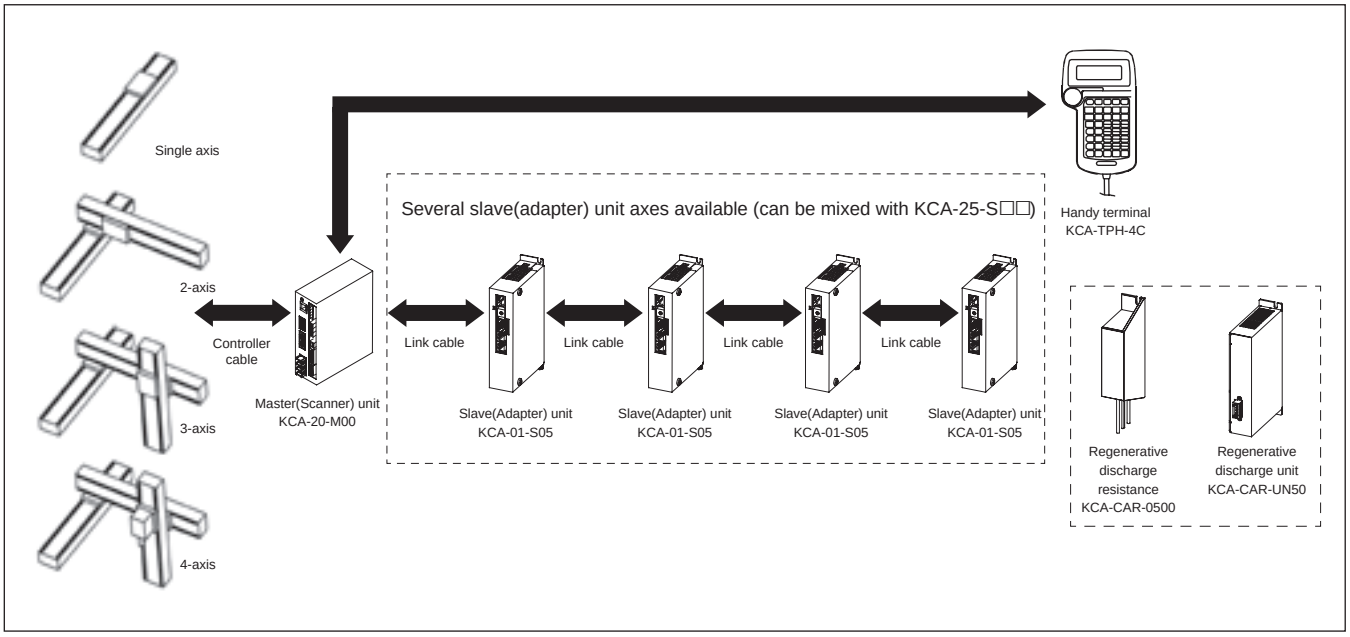

[General specifications]

Actuator		KBZ Series
Controller		KCA-01-S05
No. of control axes		1-axis (connect to master(scanner) unit)
Motor capacity		50 W
Abnormal display		Abnormal display indicator ON (front panel) Handy terminal (Connect to master(scanner) unit)
Origin sensor input		Yes
Regenerative function		Yes (external mounted regenerative resistance)
Dynamic brake function		None
Mechanical brake drive output		24 VDC to less than 0.4 A (For non-excitation brake) Brake release switch (SW1) enables forced release
Protection function	Hard error	Sensor abnormality, drive power supply abnormality, volatile memory abnormality, etc.
	Soft error	Acceleration, overload, excessive position deviation, etc.
	Warning	Battery voltage low
Status display		When the power is turned on, it lights in green. In case of an error, it lights in red.

Control power supply voltage	24 VDC ±10%	
Drive power supply voltage	24 VDC ±10%	
Control power supply capacity	0.25 A	
Drive power supply capacity	Depends on the axis, Rating 3 A (max. 9 A)	
Ambient conditions	Operating ambient temperature	0 to 40°C
	Operating ambient humidity	90% or less (no condensation)
	Storage ambient temperature	−10 to 85°C
	Storage ambient humidity	90% or less (no condensation)
	Environment	Indoors (no exposure to direct sunlight); No dirt, dust, or corrosive or flammable gases; at 1,000 m or less above sea level
	Vibration/ impact	Less than 4.9 m/s²/less than 19.6 m/s²
Dimensions	31 (W) × 146 (H) × 89 (D) (excluding screw projections)	
Weight	Approx. 0.25 kg	

[Dimensions]

Slave(Adapter) unit

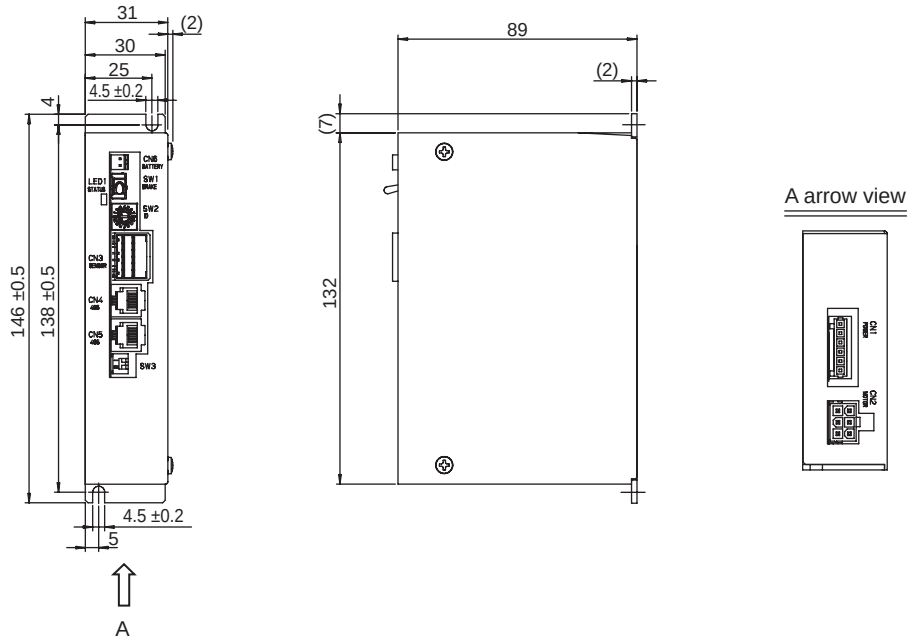

[Section names]

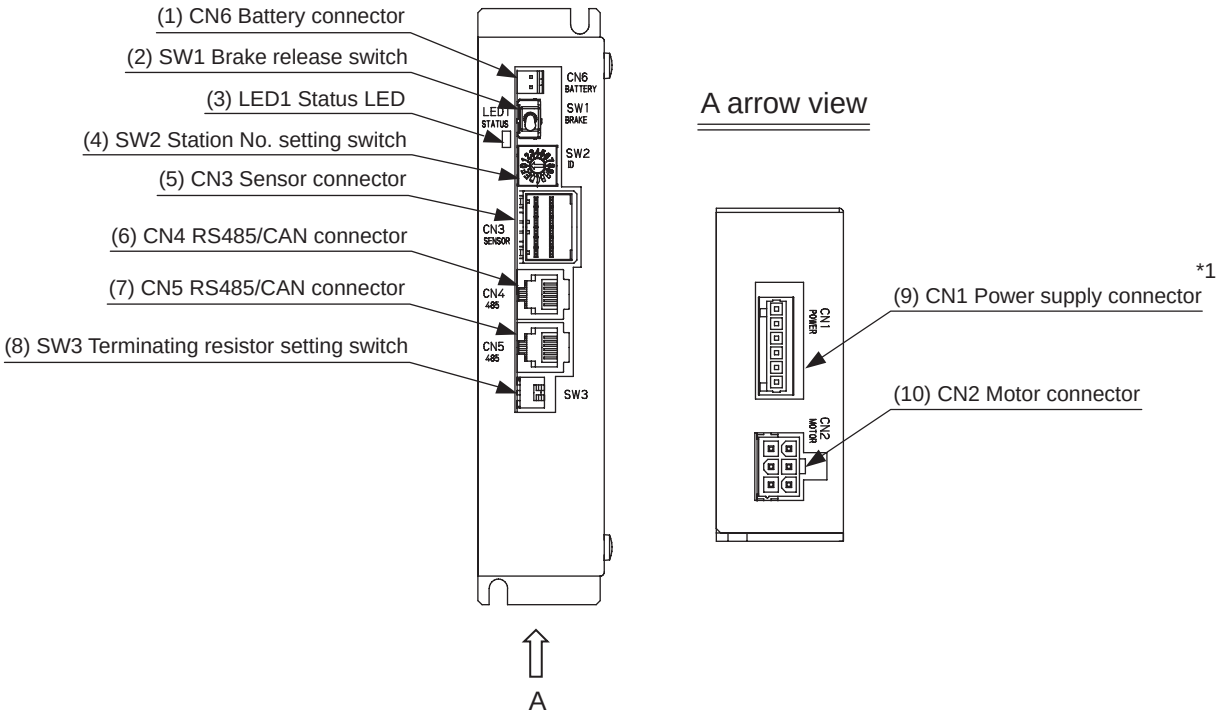

(1) CN6 Battery connector
Used to connect the backup battery for the resolver ABS.

(2) SW1 Brake release switch
A momentary switch used to forcibly release the brake.
While the lever is held up, the brake is forcibly released. When the lever is loosened, the brake returns to normal control.

(3) LED1 Status LED
Displays the controller status. When the power is turned on, it lights in green. In case of an error, it lights in red.

(4) SW2 Station No. setting switch
Used to specify the station No. of each slave(adapter) unit when they are connected to control multiple axes.
Set to "F" when updating the firmware.

*1 Comes equipped with a plug and wiring lever.

(5) CN3 Sensor connector
Used to connect motor sensor cables.

(6) CN4 RS485/CAN connector
Used to connect communication cables for slave(adapter) unit (option) connection.

(7) CN5 RS485/CAN connector
Used to connect communication cables for slave(adapter) unit (option) connection.

(8) SW3 Terminating resistor setting switch
Used to connect the terminating resistor for communication when a slave(adapter) unit (option) is connected.

(9) CN1 Power supply connector
Used to input control power supply and drive power supply.

(10) CN2 Motor connector
Used to connect motor cables.

Controller cable

[Applications]

Cable to connect the shaft body to the controller. It contains both power lines and resolver signal lines, and is formed from two bend resistant cables.
This is a dedicated cable for the shaft body. There is no user cable included.

How to order

KBZ - CC - M 30

Controller cable

Ⓐ Cable length

Code	Content
Ⓐ Cable length	
30	3000 mm
40	4000 mm
50	5000 mm

* The controller cable is a set made from one motor line and one resolver line.

[Dimensions]

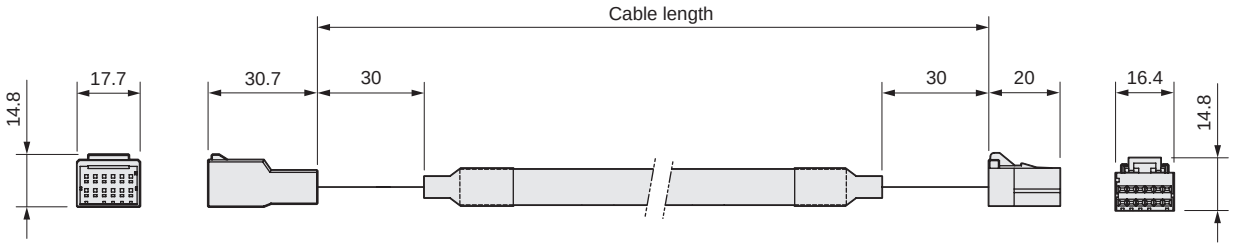

Tab housing: 1-1318115-6 (Tyco Electronics)
Tab contact: 1318112-1 (Tyco Electronics)

Resolver cable covering diameter: 8.9 mm

Receptacle housing: 1-1318118-6 (Tyco Electronics)
Receptacle contact: 1318108-1 (Tyco Electronics)

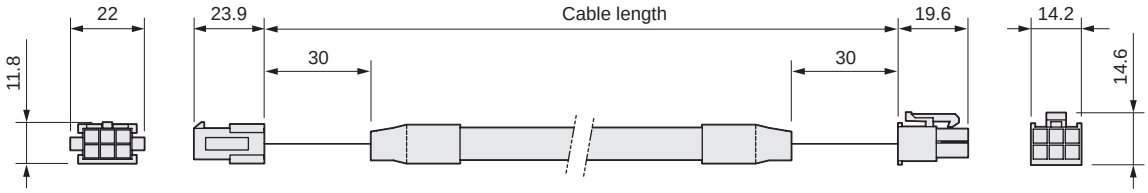

Plug: 5559-06P (MOLEX)
Pin: 5558-PBT (MOLEX)

Motor cable covering diameter: 8.7 mm

Receptacle: 5557-06R (MOLEX)
Pin: 5556TL (MOLEX)

Regenerative resistance

[Applications]

Use with the vertical axis.
(The unit prevents overvoltage generated in the controller.)
* There is a unit type with a cover (KCA-CAR-UN50) and a resistance type without a cover (KCA-CAR-0500).
* Discharge unit energy is all converted to heat.
* If there is abnormal heat generation in the resistance, it experiences contact output (N.C.).
* A one axis unit.

[Dimensions]

KCA-CAR-UN50

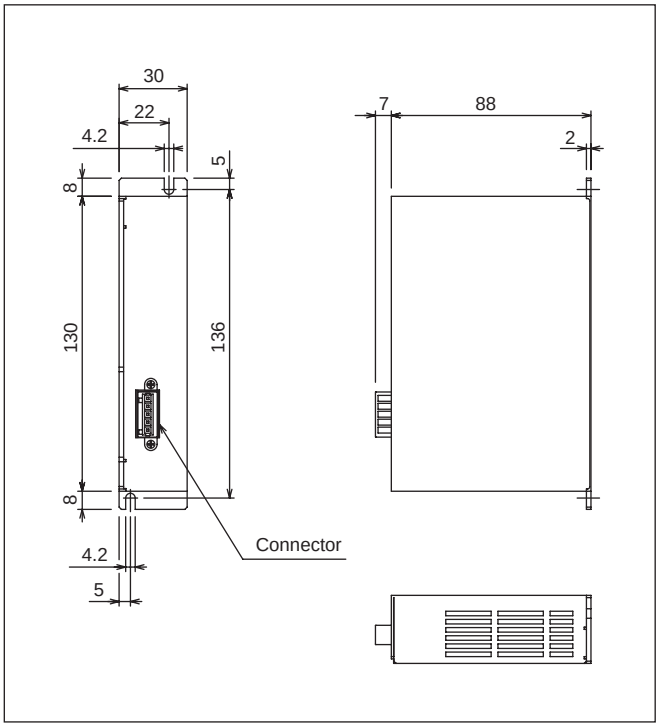

Accessories: connector, wiring lever

KCA-CAR-0500

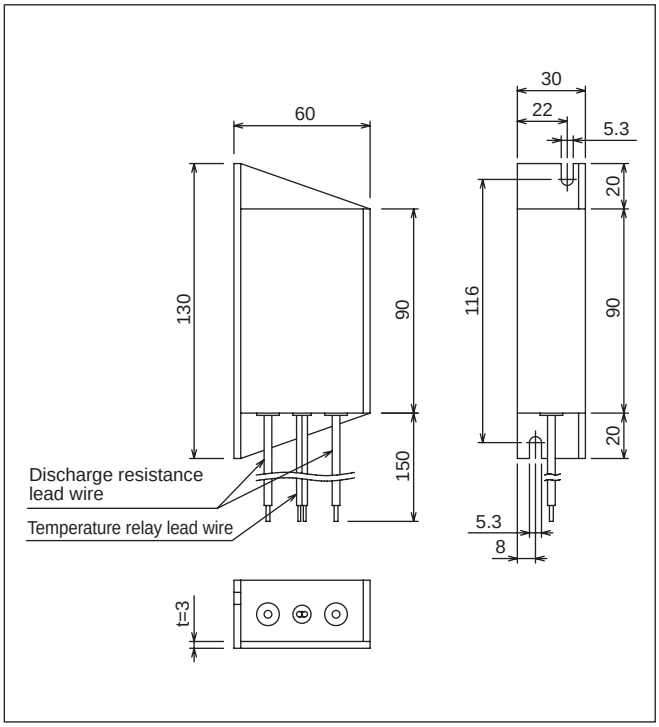

Accessories: relay connector × 2

[Connection example]

KCA-CAR-UN50

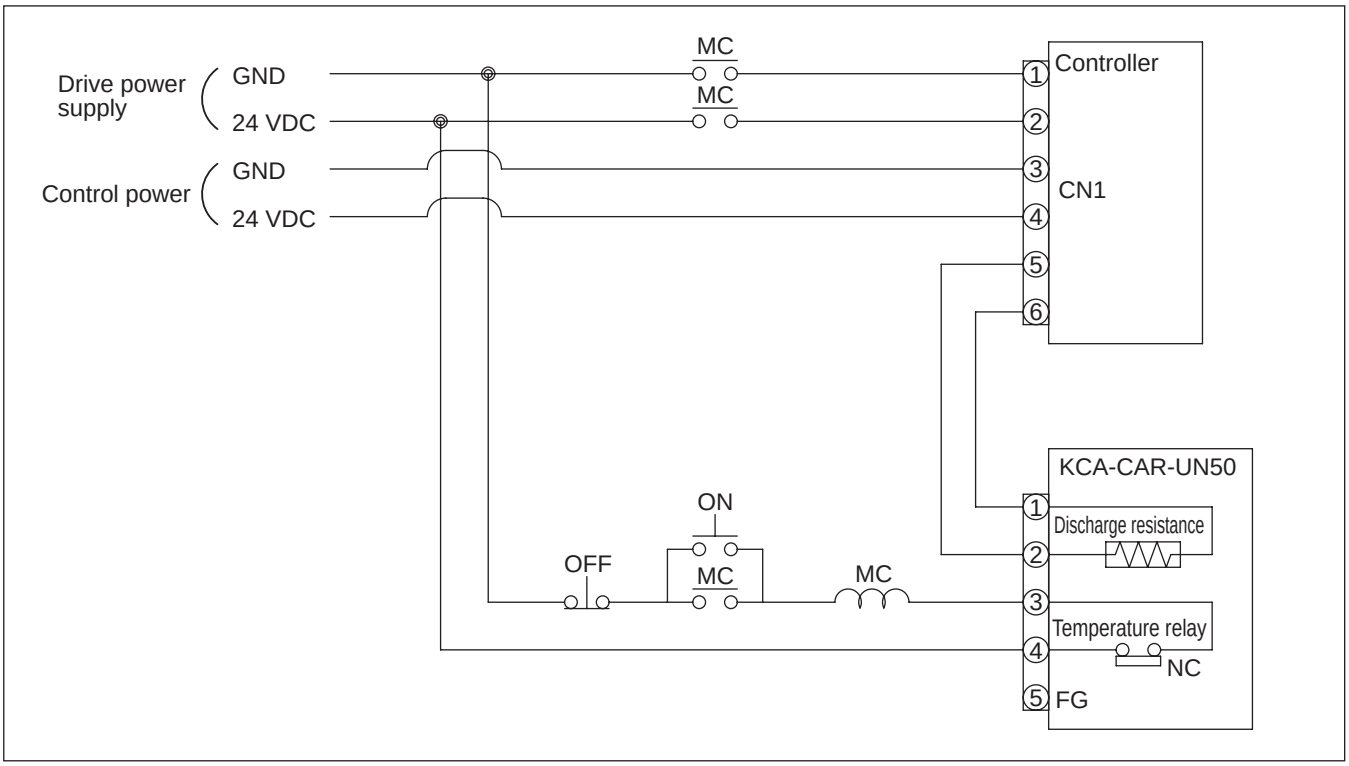

- A temperature relay which operates at the temperature of 120°C is incorporated in KCA-CAR-UN50.
- When this relay has operated, output intervals of the temperature relay are set open.
- Program a sequence so that the controller drive power supply is always turned off when the temperature relay is operating.

KCA-CAR-0500

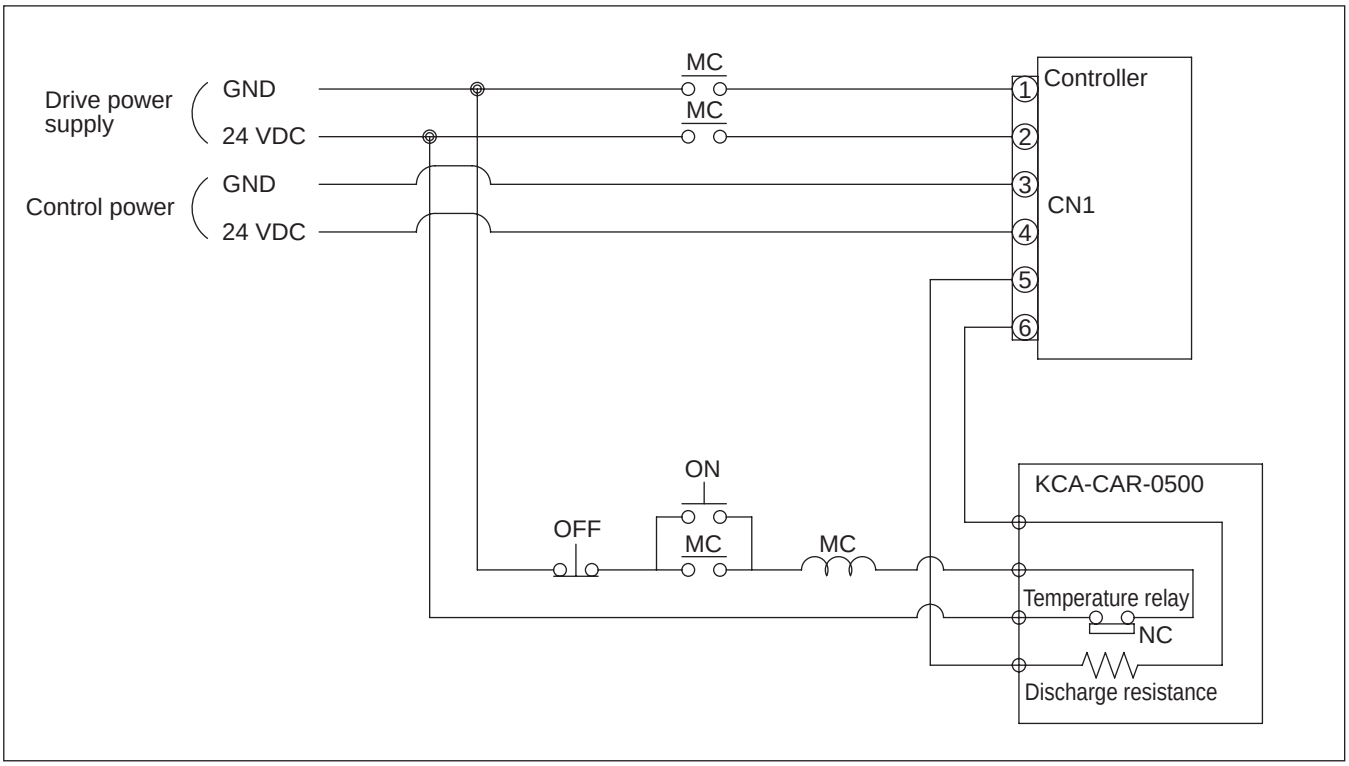

- A temperature relay which operates at the temperature of 135°C is incorporated in KCA-CAR-0500.
- When this relay has operated, output intervals of the temperature relay are set open.
- Program a sequence so that the controller drive power supply is always turned off when the temperature relay is operating.

I/O cable

[Applications]

Used to connect an I/O port of a master(scanner) unit to transmit signals with an external operation panel or control device.
A plug is attached to one side of the cable, which can be connected directly to the controller. The I/O cable should be connected to an external device according to the color marking put on the core wire and the sign table.
Before connecting the external device, the core wire should be treated with a crimp-terminal.

How to order

KCA - 01 - IC - A 30

Ⓐ Cable length

Code	Content
Ⓐ **Cable length**	
30	3000 mm
50	5000 mm

Dimensions

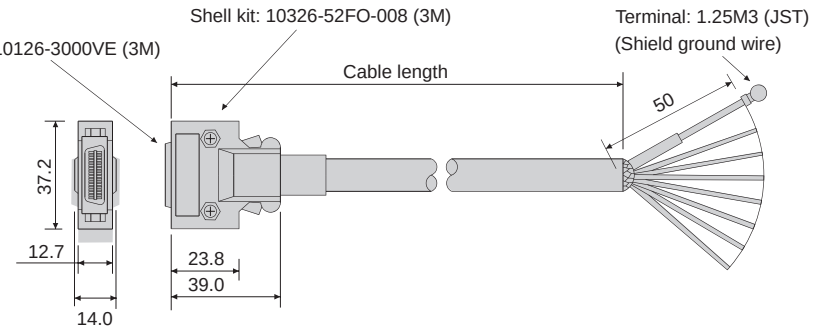

Type	Number of core wires	Core wire size	Covering diameter
KCA-01-IC-A□□	26	0.13 sq	9.1 mm

Resolver ABS backup battery (for maintenance)

[Applications]

Mounted on the controller as a backup battery for a resolver ABS.
One battery each is attached to the master(scanner) unit (KCA-01-M05) and slave(adapter) unit (KCA-01-S05).

How to order

KCA - 10 - EB - 05

● Lithium battery specifications

Descriptions			Content	Remarks
Part name			Lithium battery	Thionyl chloride lithium battery
Model			ER17500V C	Made by Toshiba
Specifications	Nominal voltage, capacity		3.6 V 2700 mAh	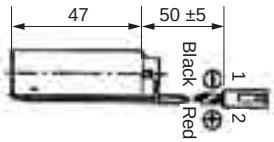
	External	Battery body	ø17 × 47 mm (excluding projections)	
		Harness length	50 ±5 mm (excluding connectors)	
	Weight		Approx. 20 g	
Backup duration (*1)			Approx. 1 year (*2)	25°C, backup battery 260 μA

(*1) Total time when the controller power is turned off.
(*2) Duration of battery varies with the ambient temperature, etc. The value only provides a rough guide.

Technical data

Guide service life (slider)

The max. load capacity and allowable moment of load are calculated using the guide service life below.
Common to ball screw drive and timing belt drive.

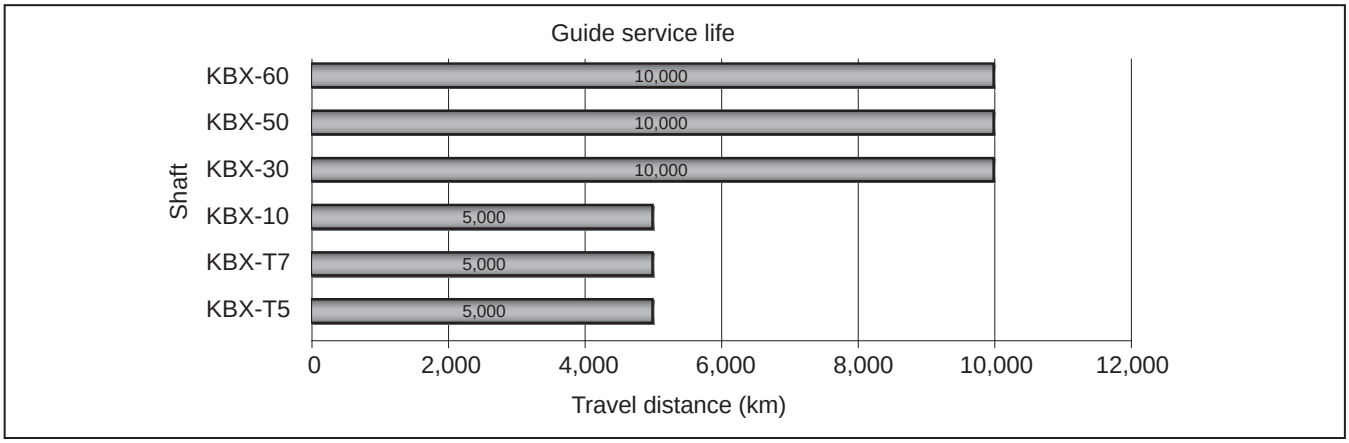

Allowable moment of load

Since the moment caused by a load imposed on the actuator largely affects the slider bearing unit, the following matters should be considered during use.

- ◆ Do not apply load exceeding the max. load capacity value.
  This value is determined based on servo motor capacity. It differs with the acceleration/deceleration time.
- ◆ Do not exceed the static allowable moment of load.
  This moment is applied when stopped. For inserting work by using a cylinder mounted to the slider, reaction force should be considered. Do not apply impact load.
- ◆ Do not exceed the dynamic allowable moment of load.
  This moment is generated during acceleration/deceleration. Calculation is required since the value varies with the load, arm length, direction, etc., but refer to the value given in the table below as a rough guide.

Both static allowable moment of load and dynamic allowable moment of load are described below. For the max. load capacity, see the specifications of each shaft body unit.

1. Static allowable moment of load

MR: rolling moment
MP: pitching moment
MY: yawing moment

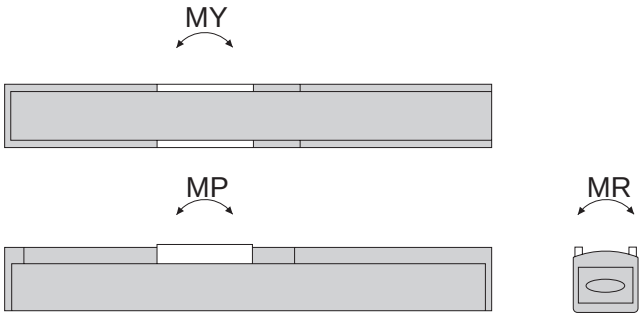

Static allowable moment of load (N·m)	MR							MP							MY						
Axis	KBX-T5	KBX-T7	KBX-10	KBX-30	KBX-50	KBX-60G	KBX-60J	KBX-T5	KBX-T7	KBX-10	KBX-30	KBX-50	KBX-60G	KBX-60J	KBX-T5	KBX-T7	KBX-10	KBX-30	KBX-50	KBX-60G	KBX-60J
Short slider (S)	-	-	49	-	-	-	-	-	-	14	-	-	-	-	-	-	13	-	-	-	-
Medium slider (M)	31	58	59	510	2080	2700	3500	31	25.7	59	430	2160	3000	4000	12	25.7	54	370	1820	2250	3000
Long slider (L)	-	-	-	510	2080	2700	3500	-	-	-	750	3150	4750	6200	-	-	-	650	2640	3450	4750

2. Dynamic allowable moment of load

Dynamic moment of load of a shaft body largely influences its service life and performance. Dynamic allowable moment of load should be calculated considering the acceleration/deceleration time (acceleration) load, arm length, direction, speed, stroke, etc., based on the allowable moment of bearing. In the following pages, there are tables of dynamic allowable moment of load listing the load and allowable arm length so that the dynamic allowable moment of load can be obtained easily.
Load weight W [kg] and arm length up to the center of gravity of the load L [mm] are shown in each table. (They are not the values of allowable moment of load.)

(Precautions)
- ■ Vibrations that may be caused by the rigidity of the shaft body and rigidity of the tool mounted to the shaft body slider are not involved in calculating the value for distance value to the load listed in the "dynamic allowable moment of load" table. There may be cases in which large vibrations prevent operation or the required specifications are not met.
- ■ Load and self-weight on the shaft body of the orthogonal robot causes displacement (torsion, sag, etc.).
  When straightness is required, a strong base and reinforcement from the shaft body of a combined axis may be necessary.

[Dynamic allowable moment of load] KBX-T5, KBX-T7

Load weight W [kg] and arm length up to the center of gravity of the load L [mm] are shown in each table. (They are not the values of allowable moment of load.)

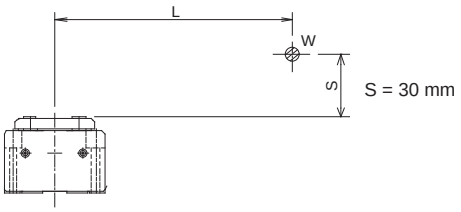

Load I [horizontal mounting]

KBX-T5	Lead 12										Lead 6				
W [kg]	0.5	1	1.5	2	2.5	3	3.5	4	4.5	5	6	7	8	9	10
L [mm]	1540	760	500	370	290	240	210	175	150	135	130	120	100	90	80

★ Speed: lead 12: 800 mm/s, lead 6: 400 mm/s (for use with stroke of 450 mm or less); acceleration/deceleration time: 0.3 sec

BET7	Lead 12										Lead 6										
W [kg]	1	2	3	4	5	6	7	8	9	10	11	12	14	16	18	20	22	24	26	28	30
L [mm]	2395	1180	775	575	455	370	315	270	235	210	185	170	165	160	150	130	120	105	95	85	80

★ Speed: lead 12: 800 mm/s, lead 6: 400 mm/s (for use with stroke of 550 mm or less); acceleration/deceleration time: 0.3 sec

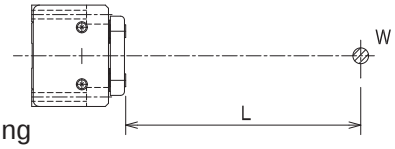

Load II [horizontal mounting] wall mounting

KBX-T5	Lead 12										Lead 6				
W [kg]	0.5	1	1.5	2	2.5	3	3.5	4	4.5	5	6	7	8	9	10
L [mm]	1600	780	505	365	285	230	190	160	140	120	110	85	70	55	45

★ Speed: lead 12: 800 mm/s, lead 6: 400 mm/s (for use with stroke of 450 mm or less); acceleration/deceleration time: 0.3 sec

KBX-T7	Lead 12										Lead 6										
W [kg]	1	2	3	4	5	6	7	8	9	10	11	12	14	16	18	20	22	24	26	28	30
L [mm]	2460	1200	780	570	445	360	300	255	220	195	170	150	140	130	110	90	75	65	55	45	35

★ Speed: lead 12: 800 mm/s, lead 6: 400 mm/s (for use with stroke of 550 mm or less); acceleration/deceleration time: 0.3 sec

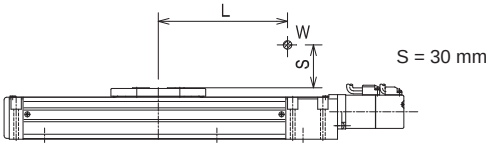

Load III [horizontal mounting]

KBX-T5	Lead 12										Lead 6				
W [kg]	0.5	1	1.5	2	2.5	3	3.5	4	4.5	5	6	7	8	9	10
L [mm]	795	395	260	195	150	125	105	90	80	70	60	50	40	35	30

★ Speed: lead 12: 800 mm/s, lead 6: 400 mm/s (for use with stroke of 450 mm or less); acceleration/deceleration time: 0.3 sec

KBX-T7	Lead 12										Lead 6										
W [kg]	1	2	3	4	5	6	7	8	9	10	11	12	14	16	18	20	22	24	26	28	30
L [mm]	990	490	325	240	190	155	135	115	100	92	82	75	65	57	49	43	39	35	31	29	27

★ Speed: lead 12: 800 mm/s, lead 6: 400 mm/s (for use with stroke of 550 mm or less); acceleration/deceleration time: 0.3 sec

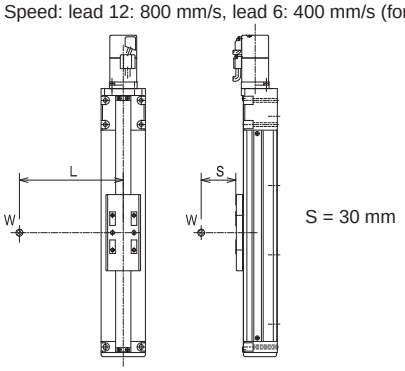

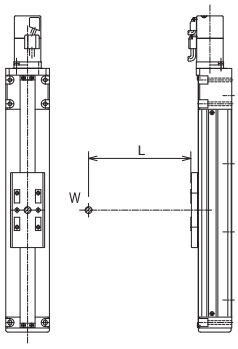

Load IV [vertical mounting]

KBX-05	Lead 12			Lead 6		
W [kg]	0.5	1	1.5	2	2.5	3
L [mm]	720	335	205	150	110	70

★ Speed: lead 12: 800 mm/s, lead 6: 400 mm/s (for use with stroke of 450 mm or less); acceleration/deceleration time: 0.3 sec

KBX-07	Lead 12				Lead 6			
W [kg]	1	2	3	4	5	6	7	8
L [mm]	915	435	275	195	160	130	105	85

★ Speed: lead 12: 800 mm/s, lead 6: 400 mm/s (for use with stroke of 550 mm or less); acceleration/deceleration time: 0.3 sec

Load V [vertical mounting]

KBX-05	Lead 12			Lead 6		
W [kg]	0.5	1	1.5	2	2.5	3
L [mm]	750	365	235	180	140	110

★ Speed: lead 12: 800 mm/s, lead 6: 400 mm/s (for use with stroke of 450 mm or less); acceleration/deceleration time: 0.3 sec

KBX-07	Lead 12				Lead 6			
W [kg]	1	2	3	4	5	6	7	8
L [mm]	920	440	285	205	160	130	105	85

★ Speed: lead 12: 800 mm/s, lead 6: 400 mm/s (for use with stroke of 550 mm or less); acceleration/deceleration time: 0.3 sec

[Dynamic allowable moment of load table] KBX-10, KBX-30, KBX-50, KBX-60

Load I [horizontal mounting]

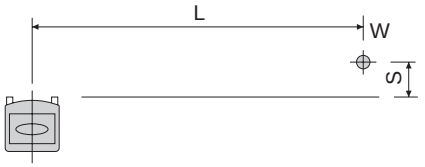

When S = 50 mm
Arm length to the center of gravity of load (L)

(mm)

Drive	Shaft	Speed (mm/s)	Lead (mm)	Slider	Load: W (kg)															
					5	10	15	20	25	30	35	40	45	50	55	60	65	70	75	80
Ball screw	KBX-10E	1200	20	S	375	175	105	-	-	-	-	-	-	-	-	-	-	-	-	-
				M	700	355	240	-	-	-	-	-	-	-	-	-	-	-	-	-
		600	10	S	560	270	180	135	110	90	-	-	-	-	-	-	-	-	-	-
				M	810	395	270	205	167	140	-	-	-	-	-	-	-	-	-	-
		300	5	S	615	320	210	160	140	110	97	85	77	70	-	-	-	-	-	-
				M	820	405	275	210	172	145	120	100	87	75	-	-	-	-	-	-
	KBX-30E	1200	20	M	1182	590	410	315	-	-	-	-	-	-	-	-	-	-	-	-
				L	1342	670	467	360	-	-	-	-	-	-	-	-	-	-	-	-
		600 (300)	10 (5)	M	1480	740	515	400	330	285	252	215	185	160	-	-	-	-	-	-
				L	1542	775	537	415	347	300	262	225	192	165	-	-	-	-	-	-
	KBX-30F	1200	20	M	1135	590	410	315	260	225	200	165	-	-	-	-	-	-	-	-
				L	1290	670	465	360	300	260	230	195	-	-	-	-	-	-	-	-
		600 (300)	10 (5)	M	1425	740	515	400	330	285	525	215	185	160	140	120	110	95	85	75
				L	1485	775	535	415	345	300	265	225	190	165	145	125	110	100	90	80
	KBX-50F	1200	20	M	5320	2620	1720	1270	1000	820	690	595	520	460	410	370	-	-	-	-
				L	5545	2730	1795	1325	1040	855	720	620	540	480	430	385	-	-	-	-
		600 (300)	10 (5)	M	5875	2895	1900	1405	1105	905	765	655	575	510	455	410	370	335	310	285
				L	5945	2925	1920	1420	1115	815	770	665	580	515	460	415	375	340	315	290
	KBX-50G	1200	20	M	5320	2620	1720	1270	1000	820	690	595	520	460	410	370	335	305	280	255
				L	5545	2730	1795	1325	1040	855	720	620	540	480	430	385	350	320	290	265
		600 (300)	10 (5)	M	5875	2895	1900	1405	1105	905	765	655	575	510	455	410	370	335	310	285
				L	5945	2925	1920	1420	1115	815	770	665	580	515	460	415	375	340	315	290

★ Speed with stroke of 600 mm or less (acceleration/deceleration time: 0.36 sec)

(mm)

Drive	Shaft	Speed (mm/s)	Lead (mm)	Slider	Load: W (kg)								
					85	90	95	100	110	120	130	140	150
Ball screw	KBX-50F	600 (300)	10 (5)	M	260	245	225	210	-	-	-	-	-
				L	270	245	230	210	-	-	-	-	-
	KBX-50G	1200	20	M	235	215	200	185	-	-	-	-	-
				L	245	230	210	195	-	-	-	-	-
		600 (300)	10 (5)	M	260	245	225	210	180	160	140	125	110
				L	270	245	230	210	185	160	140	125	110

★ Speed with stroke of 600 mm or less (acceleration/deceleration time: 0.36 sec)

(mm)

Drive	Shaft	Speed (mm/s)	Lead (mm)	Slider	Load: W (kg)														
					10	20	30	40	50	60	70	80	90	100	110	120	130	140	150
Ball screw	KBX-60G	1200	20	M	7050	3450	2300	1700	1350	1100	950	800	700	650	-	-	-	-	-
				L	7700	3800	2500	1850	1500	1200	1050	900	800	700	-	-	-	-	-
		600	10	M	8400	4150	2750	2050	1600	1350	1150	950	850	750	700	600	550	500	500
				L	8700	4300	2850	2100	1650	1350	1150	1000	900	800	700	650	600	550	500

★ Speed with stroke of 700 mm or less (acceleration/deceleration time: 0.36 sec)

(mm)

Drive	Shaft	Speed (mm/s)	Lead (mm)	Slider	Load: W (kg)														
					110	120	130	140	150	160	170	180	190	200	210	220	230	240	250
Ball screw	KBX-60J	900	20	M	800	700	700	600	500	500	500	400	400	400	-	-	-	-	-
				L	800	800	700	600	600	500	500	500	400	400	-	-	-	-	-
		450	10	M	900	800	700	700	600	600	500	500	500	400	400	400	400	400	300
				L	900	800	800	700	600	600	600	500	500	500	400	400	400	400	300

★ Speed with stroke of 1,000 mm or less (acceleration/deceleration time: 0.27 sec)

(mm)

Drive	Shaft	Speed (mm/s)	Lead (mm)	Slider	Load: W (kg)							
					5	10	15	20	25	30	35	40
Timing belt	KBX-10E	1000	21	S	375	175	105	-	-	-	-	-
				M	700	355	240	-	-	-	-	-
	KBX-10F	1000	21	S	375	175	105	70	-	-	-	-
				M	700	355	240	180	-	-	-	-
		2000	42	S	112	52	-	-	-	-	-	-
				M	210	106	-	-	-	-	-	-
	KBX-30E	1000	21	M	1182	590	410	-	-	-	-	-
				L	1342	670	467	-	-	-	-	-
	KBX-30F	1000	21	M	1135	590	410	315	260	225	200	165
				L	1290	670	465	360	300	260	230	195
		2000	42	M	454	236	164	126	-	-	-	-
				L	516	268	186	144	-	-	-	-
	KBX-50F	1000	21	M	5320	2620	1720	1270	1000	850	690	595
				L	5545	2730	1795	1325	1040	855	720	620
	KBX-50G	2000	42	M	2128	1048	688	508	-	-	-	-
				L	2218	1092	718	530	-	-	-	-

★ Speed: lead 21 mm: 0.3 s, lead 42 mm: 0.5 s

[Dynamic allowable moment of load table] KBX-10, KBX-30, KBX-50, KBX-60

For S=200mm

Arm length to the center of gravity of load (L)

(mm)

Drive	Shaft	Speed (mm/s)	Lead (mm)	Slider	Load: W(kg)															
					5	10	15	20	25	30	35	40	45	50	55	60	65	70	75	80
Ball screw	KBX-10E	1200	20	S	310	105	-	-	-	-	-	-	-	-	-	-	-	-	-	-
				M	690	340	220		-	-	-	-	-	-	-	-	-	-	-	-
		600	10	S	537	245	150	105	75	50	-	-	-	-	-	-	-	-	-	-
				M	790	390	265	200	165	135	-	-	-	-	-	-	-	-	-	-
		300	5	S	622	300	200	150	120	100	87	75	67	60	-	-	-	-	-	-
				M	820	405	275	210	172	145	120	100	87	75	-	-	-	-	-	-
	KBX-30E	1200	20	M	1180	585	400	305	-	-	-	-	-	-	-	-	-	-	-	-
				L	1342	670	462	355	-	-	-	-	-	-	-	-	-	-	-	-
		600 (300)	10 (5)	M	1480	740	515	395	330	280	250	215	180	155	-	-	-	-	-	-
				L	1542	770	537	415	345	295	262	225	190	165	-	-	-	-	-	-
	KBX-30F	1200	20	M	1135	585	400	305	225	185	155	130	-	-	-	-	-	-	-	-
				L	1290	670	460	355	295	250	220	190	-	-	-	-	-	-	-	-
		600 (300)	10 (5)	M	1425	740	510	395	330	280	250	215	180	155	135	120	105	90	80	70
				L	1485	770	535	415	345	295	265	225	190	165	145	125	110	100	85	45
	KBX-50F	1200	20	M	5320	2620	1720	1265	995	815	685	590	515	450	400	360	-	-	-	-
				L	5545	2730	1790	1325	1040	855	720	615	540	475	425	380	-	-	-	-
		600 (300)	10 (5)	M	5875	2895	1900	1400	1105	905	765	655	575	505	455	405	370	335	310	285
				L	5945	2925	1920	1420	1115	915	770	665	580	515	460	415	375	340	310	285
	KBX-50G	1200	20	M	5320	2620	1720	1265	995	815	685	590	515	450	400	360	325	295	270	245
				L	5545	2730	1790	1325	1040	855	720	615	540	475	425	380	345	315	285	260
		600 (300)	10 (5)	M	5785	2895	1900	1400	1105	905	765	655	575	505	455	405	370	335	310	285
				L	5945	2925	1920	1420	1115	915	770	665	580	515	460	415	375	340	310	285

★ Speed with stroke of 600mm or less (acceleration/deceleration time: 0.36s)

(mm)

Drive	Shaft	Speed (mm/s)	Lead (mm)	Slider	Load: W(kg)								
					85	90	95	100	110	120	130	140	150
Ball screw	KBX-50F	600 (300)	10 (5)	M	260	240	225	210	-	-	-	-	-
				L	265	245	225	210	-	-	-	-	-
	KBX-50G	1200	20	M	225	205	190	175	-	-	-	-	-
				L	240	220	205	190	-	-	-	-	-
		600 (300)	10 (5)	M	260	240	225	210	180	160	140	120	105
				L	265	245	225	210	185	160	140	125	110

★ Speed with stroke of 600mm or less (acceleration/deceleration time: 0.36s)

(mm)

Drive	Shaft	Speed (mm/s)	Lead (mm)	Slider	Load: W(kg)														
					10	20	30	40	50	60	70	80	90	100	110	120	130	140	150
Ball screw	KBX-60G	1200	20	M	7050	3450	2300	1700	1350	1100	950	800	700	650	-	-	-	-	-
				L	7700	3800	2500	1850	1500	1200	1050	900	800	700	-	-	-	-	-
		600	10	M	8400	4150	2750	2050	1600	1350	1150	950	850	750	700	600	550	500	500
				L	8700	4300	2850	2100	1650	1350	1150	1000	900	800	700	650	600	550	500

★ Speed with stroke of 700mm or less (acceleration/deceleration time: 0.36s)

(mm)

Drive	Shaft	Speed (mm/s)	Lead (mm)	Slider	Load: W(kg)														
					110	120	130	140	150	160	170	180	190	200	210	220	230	240	250
Ball screw	KBX-60J	900	20	M	800	700	600	600	500	500	500	400	400	400	-	-	-	-	-
				L	800	800	700	600	600	500	500	500	400	400	-	-	-	-	-
		450	10	M	900	800	700	700	600	600	500	500	500	400	400	400	400	400	300
				L	900	800	800	700	600	600	600	500	500	500	400	400	400	400	300

★ Speed with stroke of 1000mm or less (acceleration/deceleration time: 0.27s)

(mm)

Drive	Shaft	Speed (mm/s)	Lead (mm)	Slider	Load: W(kg)							
					5	10	15	20	25	30	35	40
Timing belt	KBX-10E	1000	21	S	310	105	-	-	-	-	-	-
				M	690	340	220	-	-	-	-	-
	KBX-10F	1000	21	S	310	105	-	-	-	-	-	-
				M	690	340	220	160	-	-	-	-
		2000	42	S	93	31	-	-	-	-	-	-
				M	207	102	66	48	-	-	-	-
	KBX-30E	1000	21	M	1180	585	400	-	-	-	-	-
				L	1342	670	462	-	-	-	-	-
	KBX-30F	1000	21	M	1135	585	400	305	225	185	155	130
				L	1290	670	460	355	295	250	220	190
		2000	42	M	454	454	454	454	-	-	-	-
				L	516	268	184	142	-	-	-	-
	KBX-50F	1000	21	M	5320	2620	1720	1265	995	815	685	590
				L	5545	2730	1790	1325	1040	855	720	615
	KBX-50G	2000	42	M	2128	1048	688	506	-	-	-	-
				L	2218	1092	716	530	-	-	-	-

★ Speed: lead 21mm:0.3s, lead 42mm:0.5s

[Dynamic allowable moment of load table] KBX-10, KBX-30, KBX-50, KBX-60

Load II [horizontal mounting] wall mounting

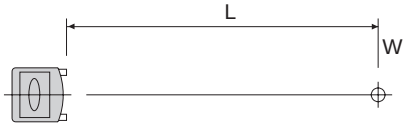

Arm length to the center of gravity of load (L) (mm)

Drive	Shaft	Speed (mm/s)	Lead (mm)	Slider	Load: W (kg)															
					5	10	15	20	25	30	35	40	45	50	55	60	65	70	75	80
Ball screw	KBX-10E	1200	20	S	335	130	60	-	-	-	-	-	-	-	-	-	-	-	-	-
				M	660	290	165	-	-	-	-	-	-	-	-	-	-	-	-	-
		600	10	S	440	165	85	40	12	-	-	-	-	-	-	-	-	-	-	-
				M	715	310	175	110	72	45	-	-	-	-	-	-	-	-	-	-
		300	5	S	467	180	90	45	17	0	-	-	-	-	-	-	-	-	-	-
				M	720	305	175	110	72	45	27	15	3	-	-	-	-	-	-	-
	KBX-30E	1200	20	M	1342	610	388	275	-	-	-	-	-	-	-	-	-	-	-	-
				L	1435	855	413	290	-	-	-	-	-	-	-	-	-	-	-	-
		600 (300)	10 (5)	M	1467	670	423	300	228	175	140	115	95	80	-	-	-	-	-	-
				L	1482	675	428	300	228	180	143	115	95	80	-	-	-	-	-	-
	KBX-30F	1200	20	M	1285	610	385	275	205	160	130	105	-	-	-	-	-	-	-	-
				L	1375	655	410	290	220	170	135	110	-	-	-	-	-	-	-	-
		600 (300)	10 (5)	M	1405	670	420	300	225	175	140	115	95	80	65	55	45	35	30	20
				L	1420	675	425	300	230	180	140	115	95	80	65	55	45	35	30	25
	KBX-50F	1200	20	M	5690	2815	1855	1375	1085	895	760	655	575	510	460	415	-	-	-	-
				L	5900	2915	1920	1425	1125	930	785	680	595	530	475	430	-	-	-	-
		600 (300)	10 (5)	M	6055	2995	1975	1460	1155	850	805	695	610	545	490	440	405	370	340	315
				L	6085	3010	1985	1470	1165	955	810	700	615	545	490	445	405	370	340	315
	KBX-50G	1200	20	M	5690	2815	1855	1375	1085	895	760	655	575	510	460	415	375	345	320	295
				L	5900	2915	1920	1425	1125	930	785	680	595	530	475	430	390	360	330	305
		600 (300)	10 (5)	M	6055	2995	1975	1460	1155	950	805	695	610	545	490	440	405	370	340	315
				L	6085	3010	1985	1470	1165	955	810	700	615	545	490	445	405	370	340	315

★ Speed with stroke of 600 mm or less (acceleration/deceleration time: 0.36 sec)

(mm)

Drive	Shaft	Speed (mm/s)	Lead (mm)	Slider	Load: W (kg)								
					85	90	95	100	110	120	130	140	150
Ball screw	KBX-50F	600 (300)	10 (5)	M	290	272	255	240	-	-	-	-	-
				L	295	275	255	240	-	-	-	-	-
	KBX-50G	1200	20	M	275	255	240	220	-	-	-	-	-
				L	285	265	245	230	-	-	-	-	-
		600 (300)	10 (5)	M	290	270	255	240	210	185	170	150	135
				L	295	275	255	240	210	190	170	150	135

★ Speed with stroke of 600 mm or less (acceleration/deceleration time: 0.36 sec)

(mm)

Drive	Shaft	Speed (mm/s)	Lead (mm)	Slider	Load: W (kg)														
					10	20	30	40	50	60	70	80	90	100	110	120	130	140	150
Ball screw	KBX-60G	1200	20	M	8365	4065	2665	1965	1515	1265	1065	915	765	665	-	-	-	-	-
				L	8765	4315	2815	2065	1615	1315	1115	965	815	715	-	-	-	-	-
		600	10	M	8965	4365	2865	2115	1665	1365	1115	965	815	715	665	565	515	465	415
				L	9015	4415	2865	2115	1665	1365	1115	965	865	715	665	565	515	465	415

★ Speed with stroke of 700 mm or less (acceleration/deceleration time: 0.36 sec)

(mm)

Drive	Shaft	Speed (mm/s)	Lead (mm)	Slider	Load: W (kg)														
					110	120	130	140	150	160	170	180	190	200	210	220	230	240	250
Ball screw	KBX-60J	900	20	M	815	715	615	615	515	515	415	415	415	315	-	-	-	-	-
				L	815	715	715	615	615	515	515	415	415	415	-	-	-	-	-
		450	10	M	815	815	715	615	615	515	515	415	415	415	315	315	315	315	215
				L	815	815	715	615	615	515	515	415	415	415	315	315	315	315	315

★ Speed with stroke of 1,000 mm or less (acceleration/deceleration time: 0.27 sec)

(mm)

Drive	Shaft	Speed (mm/s)	Lead (mm)	Slider	Load: W (kg)							
					5	10	15	20	25	30	35	40
Timing belt	KBX-10E	1000	21	S	335	130	60	-	-	-	-	-
				M	660	290	165	-	-	-	-	-
	KBX-10F	1000	21	S	335	130	60	35	-	-	-	-
				M	660	290	165	105	-	-	-	-
		2000	42	S	100	39	-	-	-	-	-	-
				M	198	87	-	-	-	-	-	-
	KBX-30E	1000	21	M	1342	610	388	-	-	-	-	-
				L	1435	655	413	-	-	-	-	-
	KBX-30F	1000	21	M	1285	610	385	275	205	160	130	105
				L	1375	655	410	290	220	170	135	110
		2000	42	M	514	244	154	110	-	-	-	-
				L	550	262	164	116	-	-	-	-
	KBX-50F	1000	21	M	5690	2815	1855	1375	1085	895	760	655
				L	5900	2915	1920	1425	1125	930	785	680
	KBX-50G	2000	42	M	2276	1126	742	550	-	-	-	-
				L	2360	1166	768	570	-	-	-	-

★ Speed: lead 21 mm: 0.3 s, lead 42 mm: 0.5 s

[Dynamic allowable moment of load table] KBX-10, KBX-30, KBX-50, KBX-60

Load III [horizontal mounting]

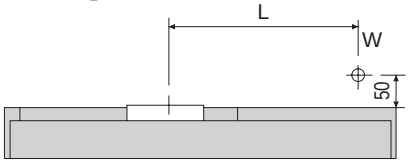

Arm length to the center of gravity of load (L) (mm)

Drive	Shaft	Speed (mm/s)	Lead (mm)	Slider	Load: W(kg)															
					5	10	15	20	25	30	35	40	45	50	55	60	65	70	75	80
Ball screw	KBX-10E	1200	20	S	215	105	70	50	-	-	-	-	-	-	-	-	-	-	-	-
				M	900	415	265	210	-	-	-	-	-	-	-	-	-	-	-	-
		600	10	S	215	105	80	55	47	40	-	-	-	-	-	-	-	-	-	-
				M	837	425	265	195	153	120	-	-	-	-	-	-	-	-	-	-
		300	5	S	240	120	80	65	52	40	35	30	30	25	-	-	-	-	-	-
				M	915	465	295	205	153	120	100	85	72	65	-	-	-	-	-	-
	KBX-30E	1200	20	M	1380	690	480	370	-	-	-	-	-	-	-	-	-	-	-	-
				L	2400	1200	835	650	-	-	-	-	-	-	-	-	-	-	-	-
		600 (300)	10 (5)	M	1290	690	483	375	310	265	235	200	170	150	-	-	-	-	-	-
				L	2400	1205	838	650	540	465	410	350	300	260	-	-	-	-	-	-
	KBX-30F	1200	20	M	1330	690	480	370	305	265	235	200	-	-	-	-	-	-	-	-
				L	2305	1200	835	650	540	465	410	350	-	-	-	-	-	-	-	-
		600 (300)	10 (5)	M	1300	690	480	375	310	265	235	200	170	150	130	115	100	90	80	70
				L	2310	1205	835	650	540	465	415	350	300	260	225	200	175	155	140	125
	KBX-50F	1200	20	M	6380	3140	2060	1520	1200	980	930	710	620	550	490	440	-	-	-	-
				L	9280	4570	3000	2215	1745	1430	1205	1040	905	800	715	645	-	-	-	-
		600 (300)	10 (5)	M	6380	3140	2060	1525	1200	985	830	715	625	550	495	445	400	365	335	310
				L	9280	4570	3000	2215	1745	1430	1205	1040	910	805	720	645	585	535	490	450
	KBX-50G	1200	20	M	6380	3140	2060	1520	1200	980	830	710	620	550	490	440	400	365	335	305
				L	9280	4570	3000	2215	1745	1430	1205	1040	905	800	715	645	585	535	490	450
		600 (300)	10 (5)	M	6380	3140	2060	1525	1200	985	830	715	625	550	495	445	400	365	335	310
				L	9280	4570	3000	2215	1745	1430	1205	1040	910	805	720	645	585	535	490	450

★ Speed with stroke of 600mm or less (acceleration/deceleration time: 0.36s)

(mm)

Drive	Shaft	Speed (mm/s)	Lead (mm)	Slider	Load: W(kg)								
					85	90	95	100	110	120	130	140	150
Ball screw	KBX-50F	600 (300)	10 (5)	M	285	265	245	230	-	-	-	-	-
				L	415	385	355	330	-	-	-	-	-
	KBX-50G	1200	20	M	280	260	240	225	-	-	-	-	-
				L	415	385	355	330	-	-	-	-	-
		600 (300)	10 (5)	M	285	265	245	230	200	175	155	135	120
				L	415	385	355	330	290	255	225	200	175

★ Speed with stroke of 600mm or less (acceleration/deceleration time: 0.36s)

(mm)

Drive	Shaft	Speed (mm/s)	Lead (mm)	Slider	Load: W(kg)														
					10	20	30	40	50	60	70	80	90	100	110	120	130	140	150
Ball screw	KBX-60G	1200	20	M	10300	5110	3350	2500	2000	1650	1400	1200	1050	950	-	-	-	-	-
				L	16800	8300	5500	4100	3250	2650	2250	1950	1750	1550	-	-	-	-	-
		600	10	M	10300	5110	3350	2500	2000	1650	1400	1200	1050	950	850	750	700	650	600
				L	16800	8300	5500	4100	3250	2650	2250	1950	1750	1550	1400	1250	1150	1050	950

★ Speed with stroke of 700mm or less (acceleration/deceleration time: 0.36s)

(mm)

Drive	Shaft	Speed (mm/s)	Lead (mm)	Slider	Load: W(kg)														
					110	120	130	140	150	160	170	180	190	200	210	220	230	240	250
Ball screw	KBX-60J	900	20	M	1100	1000	900	800	800	700	700	600	600	600	-	-	-	-	-
				L	1800	1700	1500	1400	1300	1200	1100	1000	1000	900	-	-	-	-	-
		450	10	M	1100	1000	900	800	800	700	700	600	600	600	500	500	500	400	400
				L	1800	1700	1500	1400	1300	1200	1100	1000	1000	900	900	800	800	700	700

★ Speed with stroke of 1000mm or less (acceleration/deceleration time: 0.27s)

(mm)

Drive	Shaft	Speed (mm/s)	Lead (mm)	Slider	Load: W(kg)							
					5	10	15	20	25	30	35	40
Timing belt	KBX-10E	1000	21	S	215	105	70	-	-	-	-	-
				M	900	415	265	-	-	-	-	-
	KBX-10F	1000	21	S	215	105	70	50	-	-	-	-
				M	900	415	265	210	-	-	-	-
		2000	42	S	64	31	-	-	-	-	-	-
				M	270	124	-	-	-	-	-	-
	KBX-30E	1000	21	M	1380	690	480	-	-	-	-	-
				L	2400	1200	835	-	-	-	-	-
	KBX-30F	1000	21	M	1330	690	480	370	305	265	235	200
				L	2305	1200	835	650	540	465	410	350
		2000	42	M	532	276	192	148	-	-	-	-
				L	922	480	334	260	-	-	-	-
	KBX-50F	1000	21	M	6380	3140	2060	1520	1200	980	830	710
				L	9280	4570	3000	2215	1745	1430	1205	1040
	KBX-50G	2000	42	M	2552	1256	824	608	-	-	-	-
				L	3712	1828	1200	886	-	-	-	-

★ Speed: lead 21mm:0.3s, lead 42mm:0.5s

[Dynamic allowable moment of load table] KBX-10, KBX-30, KBX-50, KBX-60

Load IV [vertical mounting]

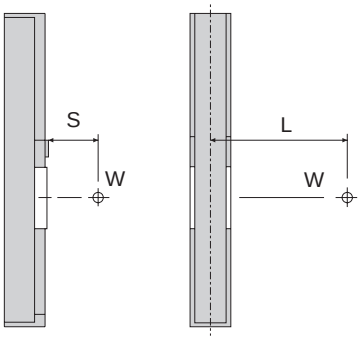

For S=50mm

Arm length to the center of gravity of load (L) (mm)

Drive	Shaft	Speed (mm/s)	Lead (mm)	Slider	Load: W(kg)																	
					3	5	8	10	12	14	16	18	20	22	25	30	35	40	45	50	55	60
Ball screw	KBX-10E	1200	20	S	245	110	-	-	-	-	-	-	-	-	-	-	-	-	-	-	-	-
				M	1270	730	-	-	-	-	-	-	-	-	-	-	-	-	-	-	-	-
		600	10	S	255	115	45	20	5	-	-	-	-	-	-	-	-	-	-	-	-	-
				M	1375	785	460	350	275	-	-	-	-	-	-	-	-	-	-	-	-	-
		300	5	S	290	150	75	45	20	5	-	-	-	-	-	-	-	-	-	-	-	-
				M	1390	795	460	350	275	230	190	160	135	115	-	-	-	-	-	-	-	-
	KBX-30E	1200	20	M	1695	985	-	-	-	-	-	-	-	-	-	-	-	-	-	-	-	-
				L	3000	1770	-	-	-	-	-	-	-	-	-	-	-	-	-	-	-	-
		600	10	M	1815	1060	635	490	395	-	-	-	-	-	-	-	-	-	-	-	-	-
				L	3210	1895	1155	910	745	-	-	-	-	-	-	-	-	-	-	-	-	-
		300	5	M	1835	1070	640	495	400	330	280	240	210	185	-	-	-	-	-	-	-	-
				L	3240	1920	1165	920	755	635	545	475	420	375	-	-	-	-	-	-	-	-
	KBX-30F	1200	20	M	1915	1030	585	455	-	-	-	-	-	-	-	-	-	-	-	-	-	-
				L	3383	1845	1075	845	-	-	-	-	-	-	-	-	-	-	-	-	-	-
		600	10	M	2078	1118	640	495	400	330	280	240	205	-	-	-	-	-	-	-	-	-
				L	3655	1995	1165	920	755	625	540	470	415	-	-	-	-	-	-	-	-	-
		300	5	M	2073	1118	640	495	400	330	280	240	210	185	145	100	72	60	-	-	-	-
				L	3655	1995	1165	920	755	635	545	475	420	375	305	235	193	170	-	-	-	-
	KBX-50F	1200	20	M	9848	-	-	-	-	-	-	-	-	-	-	-	-	-	-	-	-	-
				L	14343	-	-	-	-	-	-	-	-	-	-	-	-	-	-	-	-	-
		600	10	M	10528	5830	3480	2775	2305	1970	1720	1520	1365	-	-	-	-	-	-	-	-	-
				L	15330	8497	5080	4055	3375	2885	2520	2235	2005	-	-	-	-	-	-	-	-	-
		300	5	M	10625	5885	3515	2800	2325	1990	1735	1535	1380	1250	1095	905	770	670	-	-	-	-
				L	15472	8577	5130	4095	3405	2910	2545	2255	2025	1840	1610	1335	1140	990	-	-	-	-
	KBX-50G	1200	20	M	9848	5450	3255	2595	2155	1840	1605	1420	1275	1155	1010	-	-	-	-	-	-	-
				L	14343	8037	4750	3795	3155	2695	2355	2090	1875	1700	1490	-	-	-	-	-	-	-
		600	10	M	10528	5830	3480	2775	2305	1970	1720	1520	1365	1240	1085	895	762	660	582	520	-	-
				L	15330	8497	5080	4055	3375	2885	2520	2235	2005	1820	1595	1325	1127	980	870	775	-	-
		300	5	M	10625	5885	3515	2800	2325	1990	1735	1535	1380	1250	1095	905	770	670	590	525	475	430
				L	15472	8577	5130	4095	3405	2910	2545	2255	2025	1840	1610	1335	1140	990	875	785	710	645

★ Speed with stroke of 600mm or less (acceleration/deceleration time: 0.36s)

(mm)

Drive	Shaft	Speed (mm/s)	Lead (mm)	Slider	Load: W(kg)				
					10	20	25	40	50
Ball screw	KBX-60G	1200	20	M	9300	4550	3750	-	-
				L	15200	7500	6200	-	-
		600	10	M	10100	5000	4100	2400	1900
				L	16550	8200	6800	4000	3200

★ Speed with stroke of 700mm or less (acceleration/deceleration time: 0.36s)

(mm)

Drive	Shaft	Speed (mm/s)	Lead (mm)	Slider	Load: W(kg)									
					10	20	30	40	50	60	70	80	90	100
Ball screw	KBX-60J	900	20	M	12600	6200	4100	3000	2400	-	-	-	-	-
				L	20700	10200	6800	5000	4000	-	-	-	-	-
		450	10	M	13400	6600	4300	3200	2500	2100	1800	1500	1300	1200
				L	21800	10800	7200	5300	4200	3500	3000	2600	2300	2000

★ Speed with stroke of 1000mm or less (acceleration/deceleration time: 0.27s)

For S=200mm
Arm length to the center of gravity of load (L)

(mm)

Drive	Shaft	Speed (mm/s)	Lead (mm)	Slider	Load: W(kg)																	
					3	5	8	10	12	14	16	18	20	22	25	30	35	40	45	50	55	60
Ball screw	KBX-10E	1200	20	S	95	-	-	-	-	-	-	-	-	-	-	-	-	-	-	-	-	-
				M	1120	575	-	-	-	-	-	-	-	-	-	-	-	-	-	-	-	-
		600	10	S	170	0	-	-	-	-	-	-	-	-	-	-	-	-	-	-	-	-
				M	1255	640	300	205	130	-	-	-	-	-	-	-	-	-	-	-	-	-
		300	5	S	240	75	-	-	-	-	-	-	-	-	-	-	-	-	-	-	-	-
				M	1270	650	300	210	135	80	40	10	-	-	-	-	-	-	-	-	-	-
	KBX-30E	1200	20	M	1565	855	-	-	-	-	-	-	-	-	-	-	-	-	-	-	-	-
				L	2870	1640	-	-	-	-	-	-	-	-	-	-	-	-	-	-	-	-
		600	10	M	1685	930	505	360	265	-	-	-	-	-	-	-	-	-	-	-	-	-
				L	3080	1765	1025	780	615	-	-	-	-	-	-	-	-	-	-	-	-	-
		300	5	M	1705	940	510	365	270	185	140	100	70	45	-	-	-	-	-	-	-	-
				L	3110	1789	1035	790	620	505	415	345	290	230	-	-	-	-	-	-	-	-
	KBX-30F	1200	20	M	1785	900	455	325	-	-	-	-	-	-	-	-	-	-	-	-	-	-
				L	3253	1715	945	715	-	-	-	-	-	-	-	-	-	-	-	-	-	-
		600	10	M	1925	977	505	360	265	185	135	95	65	-	-	-	-	-	-	-	-	-
				L	3488	1845	1025	780	615	495	410	340	285	-	-	-	-	-	-	-	-	-
		300	5	M	1913	987	510	365	265	185	140	100	70	45	7	-	-	-	-	-	-	-
				L	3525	1865	1035	790	620	505	415	345	290	230	175	110	67	30	-	-	-	-
	KBX-50F	1200	20	M	9783	-	-	-	-	-	-	-	-	-	-	-	-	-	-	-	-	-
				L	14280	-	-	-	-	-	-	-	-	-	-	-	-	-	-	-	-	-
		600	10	M	10463	5765	3415	2710	2240	1905	1655	1460	1300	-	-	-	-	-	-	-	-	-
				L	15220	8432	5015	3990	3310	2820	2455	2170	1940	-	-	-	-	-	-	-	-	-
		300	5	M	10560	5820	3450	2735	2265	1925	1670	1475	1315	1185	1030	840	707	605	-	-	-	-
				L	15408	8512	5065	4030	3340	2850	2480	2190	1960	1775	1550	1270	1078	930	-	-	-	-
	KBX-50G	1200	20	M	9783	5387	3190	2535	2090	1775	1540	1360	1210	1090	950	-	-	-	-	-	-	-
				L	14280	7885	4690	3730	3090	2635	2290	2025	1810	1635	1425	-	-	-	-	-	-	-
		600	10	M	10463	5765	3415	2710	2240	1905	1655	1460	1300	1175	1020	835	700	600	522	460	-	-
				L	15220	8432	5015	3990	3310	2820	2455	2170	1940	1755	1535	1260	1065	920	805	715	-	-
		300	5	M	10560	5820	3450	2735	2265	1925	1670	1475	1315	1185	1030	840	707	605	527	465	415	370
				L	15408	8512	5065	4030	3340	2850	2480	2190	1960	1775	1550	1270	1078	930	815	720	645	585

★ Speed with stroke of 600mm or less (acceleration/deceleration time: 0.36s)

(mm)

Drive	Shaft	Speed (mm/s)	Lead (mm)	Slider	Load: W(kg)										
					10	20	25	30	40	50	60	70	80	90	100
Ball screw	KBX-60G	1200	20	M	9150	4400	3600	-	-	-	-	-	-	-	-
				L	15050	7350	6050	-	-	-	-	-	-	-	-
		600	10	M	9950	4850	3950	3100	2250	1750	-	-	-	-	-
				L	16400	8050	6650	5250	3850	3050	-	-	-	-	-
Ball screw	KBX-60J	900	20	M	12500	6100	5000	3900	2900	2200	-	-	-	-	-
				L	20500	10100	8350	6600	4900	3800	-	-	-	-	-
		450	10	M	13200	6400	5300	4200	3100	2400	1900	1600	1400	1200	1000
				L	21700	10700	8850	7000	5200	4100	3300	2800	2400	2100	1900

★ KBX-60G: Speed with stroke of 700mm or less (acceleration/deceleration time: 0.36s)
KBX-60J: Speed with stroke of 1000mm or less (acceleration/deceleration time: 0.27s)

[Dynamic allowable moment of load table] KBX-10, KBX-30, KBX-50, KBX-60

Load V [vertical mounting]

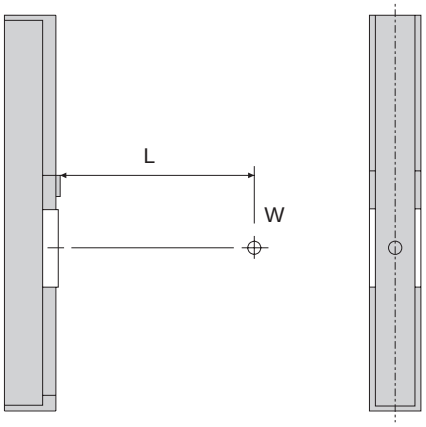

Arm length to the center of gravity of load (L)

(mm)

Drive	Shaft	Speed (mm/s)	Lead (mm)	Slider	Load: W(kg)																	
					3	5	8	10	12	14	16	18	20	22	25	30	35	40	45	50	55	60
Ball screw	KBX-10E	1200	20	S	295	160	-	-	-	-	-	-	-	-	-	-	-	-	-	-	-	-
				M	1325	780	-	-	-	-	-	-	-	-	-	-	-	-	-	-	-	-
		600	10	S	355	190	95	70	50	-	-	-	-	-	-	-	-	-	-	-	-	-
				M	1405	830	510	510	400	330	-	-	-	-	-	-	-	-	-	-	-	-
		300	5	S	390	210	110	75	50	40	30	25	20	15	-	-	-	-	-	-	-	-
				M	1420	835	510	400	330	280	240	210	185	165	-	-	-	-	-	-	-	-
	KBX-30E	1200	20	M	1925	1140	-	-	-	-	-	-	-	-	-	-	-	-	-	-	-	-
				L	3370	2005	-	-	-	-	-	-	-	-	-	-	-	-	-	-	-	-
		600	10	M	2060	1220	750	590	485	-	-	-	-	-	-	-	-	-	-	-	-	-
				L	3605	2150	1330	1055	870	-	-	-	-	-	-	-	-	-	-	-	-	-
		300	5	M	2080	1235	755	595	490	415	360	315	280	250	-	-	-	-	-	-	-	-
				L	3640	2170	1340	1070	880	750	650	575	515	465	-	-	-	-	-	-	-	-
	KBX-30F	1200	20	M	2173	1190	700	550	-	-	-	-	-	-	-	-	-	-	-	-	-	-
				L	3798	2092	1240	985	-	-	-	-	-	-	-	-	-	-	-	-	-	-
		600	10	M	2323	1272	750	590	485	410	355	310	275	-	-	-	-	-	-	-	-	-
				L	4198	2375	1330	1055	870	740	645	570	510	-	-	-	-	-	-	-	-	-
		300	5	M	2345	1285	755	595	490	415	360	315	280	250	215	175	145	120	-	-	-	-
				L	4100	2260	1340	1070	880	750	650	575	515	465	402	330	277	235	-	-	-	-
	KBX-50F	1200	20	M	11173	-	-	-	-	-	-	-	-	-	-	-	-	-	-	-	-	-
				L	16300	-	-	-	-	-	-	-	-	-	-	-	-	-	-	-	-	-
		600	10	M	11963	6625	3955	3155	2620	2240	1955	1730	1555	-	-	-	-	-	-	-	-	-
				L	17423	9657	5775	4610	3835	3280	2865	2540	2280	-	-	-	-	-	-	-	-	-
		300	5	M	12075	6732	3995	3185	2645	2260	1975	1750	1570	1420	1245	1030	877	760	-	-	-	-
				L	17588	9750	5830	4655	3870	3310	2890	2565	2305	2090	1835	1520	1297	1130	-	-	-	-
	KBX-50G	1200	20	M	11193	6197	3700	2950	2450	2095	1825	1620	1450	1315	1150	-	-	-	-	-	-	-
				L	16300	9035	5400	4310	3585	3065	2675	2375	2130	1935	1695	-	-	-	-	-	-	-
		600	10	M	11963	6625	3955	3155	2620	2240	1955	1730	1555	1410	1235	1020	867	755	665	595	-	-
				L	17423	9657	5775	4610	3835	3280	2865	2540	2280	2070	1815	1505	1285	1115	987	885	-	-
		300	5	M	12075	6735	3995	3185	2645	2260	1975	1750	1570	1420	1245	1030	877	760	670	600	540	490
				L	17588	9750	5830	4655	3870	3310	2890	2565	2305	2090	1835	1520	1297	1130	997	895	805	735

★ Speed with stroke of 600mm or less (acceleration/deceleration time: 0.36s)

(mm)

Drive	Shaft	Speed (mm/s)	Lead (mm)	Slider	Load: W(kg)										
					10	20	25	30	40	50	60	70	80	90	100
Ball screw	KBX-60G	1200	20	M	9315	4615	3800	-	-	-	-	-	-	-	-
				L	15265	7565	6250	-	-	-	-	-	-	-	-
		600	10	M	10165	5015	4150	3315	2465	1965	-	-	-	-	-
				L	16615	8265	6850	5465	4065	3215	-	-	-	-	-
Ball screw	KBX-60J	900	20	M	12715	6315	5200	4115	3115	2415	-	-	-	-	-
				L	20715	10315	8550	6815	5115	4015	-	-	-	-	-
		450	10	M	13415	6615	5500	4415	3215	2615	2115	1815	1515	1415	1215
				L	21915	10915	9050	7215	5415	4315	3515	3015	2615	2315	2115

★ KBX-60G: Speed with stroke of 700mm or less (acceleration/deceleration time: 0.36s)
KBX-60J: Speed with stroke of 1000mm or less (acceleration/deceleration time: 0.27s)

Operation mode

[Sequential mode]

Mode in which a program created using commands is executed in the order of steps.

Master(Scanner) unit		KCA-25-M10, KCA-25-M40, KCA-25-M80
Number of program steps		2500 steps
Coordinate table		999 points
Speed setting		10 stages (changeable)
Acceleration/deceleration settings		20 stages (changeable)
Number of counters		99
Number of timers		9
Multitask	Max. number of tasks	4 (all tasks can be used for axis control)
	Max. No. of control axes	4
	Max. No. of control axes per task	4

Sequential mode program example

[Operation]
When general purpose input port 1-3 is "ON" after the axes reach B point via A point from the origin, they move to C point (good product). When it is "OFF", they move to D point (rejected product).

	X	Y
A point coordinates	(100,	0)
B point coordinates	(200,	200)
C point coordinates	(200,	300)
D point coordinates	(300,	200)

[General purpose input signal use example]
Signal for good product: Port 1-3 ON
Signal for rejected product: Port 1-3 OFF
For input signal timing: Use of port 1-8

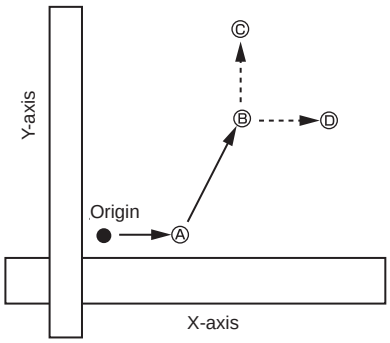

Flowchart

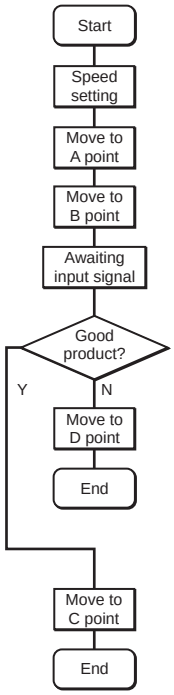

Program examples

Step	Command	Data	Comment
0001	SPD	V = 05	
0002	MOV	a S V = 00 X = 100 POST Y = 0	Ⓐ point
0003	MOV	a S V = 00 X = 200 POST Y = 200	Ⓑ point
0004	IN	PORT [1] 1……	Waiting for input of good or rejected product judgment signal.
0005	JMPI	10 PORT [1] ……1··	When general purpose input port 1-3 is ON, jump to tag No. 10.
0006	MOV	a S V = 00 X = 300 POST Y = 200	Ⓓ point (when rejected product judgment signal has been reached)
0007	END		
0008	TAG	10	
0009	MOV	a S V = 00 X = 200 POST Y = 300	Ⓒ point (when good product judgment signal has been reached)
0010	END		

[Input timing of general purpose input signals]
After the good product or rejected product judgment signal (general purpose input port 1-3) is ON, the timing signal (general purpose input port 1-8) is input.

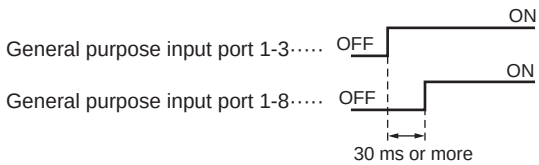

List of commands for sequential mode

Controller: KCA-25-M10, KCA-25-M40, KCA-25-M80
Handy terminal: KCA-TPH-4C

Commands	Details
Movement command	
MOV	Axis travel
MOVP	Axis travel (coordinate table indirect)
MVC	Circular interpolation
MVCP	Circular interpolation (coordinate table indirect)
MVB	Move to preceding position (return to preceding position)
MVE	Escape travel
RSMV	Axis travel via RS232C
HOME	Origin return
Command for parameter setting	
SPD	Speed setting
ACC	Acceleration/deceleration settings
OFS	Offset
OFSP	Offset (coordinate table designation)
PASS	Pass rate setting
Command for I/O port control	
OUT	Output to general purpose port
OUTP	Pulse output to general purpose port
OUTC	Counter value output to general purpose port
OUTS	Specified coordinate output to general purpose port
IOUT	Output to internal port
CANS	Cancel of specified coordinate output to general purpose port
IN	Awaiting input
INPC	Setting of input status of general purpose port to counter
INSP	Awaiting internal port input
Command for timer/counter control	
CWIT	Awaiting counter
TIM	Awaiting time
TIMP	Timer preset
CNT	Counter value preset
CNT+	Addition of counter value
CNT−	Subtraction of counter value
CNTC	Clear counters

Commands	Details
Command for program control	
NOP	Non operation
RET	Return (declaration of ending a subroutine)
STOP	Stop
END	Program end
TAG	Tag (jump destination label)
PSEL	Program selection
Command for servo control	
SVON	Servo ON
SVOF	Servo OFF
Command for matrix operation	
MVM	Matrix travel
LOOP	MVM loop
MINI	Initialization of MVM counter
Command for jump	
JMP	Unconditional jump
JMPI	Jump with input condition
JMPC	Jump with counter condition
JMPT	Jump with timer condition
BRAC	Jump to a counter value tag
Command for subroutine call	
CAL	Unconditional call
CALI	Call with input condition
CALC	Call with counter condition
CALT	Call with timer condition
Command for task control	
TSTR	Task start
TSTO	Task temporary stop
TRSA	Task restart
TCAN	Task forced finish

[External point designation mode]

Mode in which an axis is positioned by a signal output from the PLC or digital switch without using a command from the controller.
Coordinates of a specified point, speed and acceleration/deceleration should be set beforehand in the table of the controller.

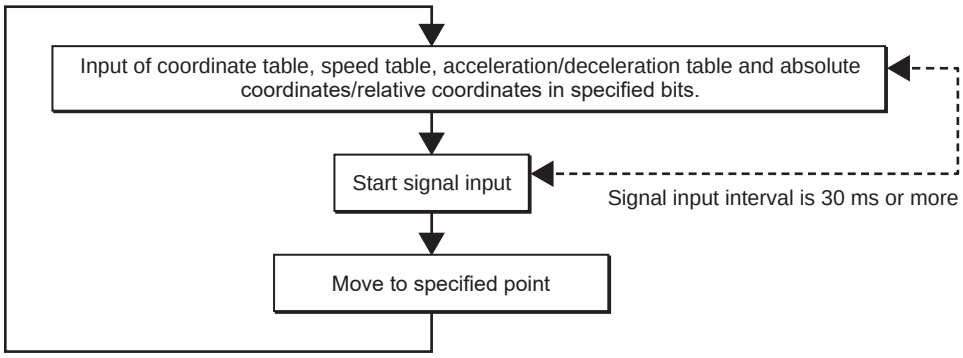

Tables that can be used

Master(Scanner) unit types: KCA-25-M10, KCA-25-M40, KCA-25-M80

	Without extension I/O unit	With extension I/O unit	CC-Link/ with DeviceNet unit
Coordinate table	Max. 256 points (max. 8 bits) (*1)	999 points (10 bits)	
Speed table	1 table (Table No. 1 fixed)	10 tables (4 bits)	
Acceleration/deceleration table	1 table (Table No. 5 fixed)	20 tables (5 bits)	
Coordinate system	Fixed to absolute coordinate system (bit designation is not permitted)	Absolute coordinate system/relative coordinate system (1 bit)	

(*1) With two or more axes. 16 points (4 bits) with one axis.

[Palletizing mode]

Mode in which traveling and loading to pallets can be programmed easily just by specifying the number of workpieces, coordinates of locations, etc., without creating a program by combining commands.
A total of three patterns are provided.

M to 1
Move from pallet to a specified point.

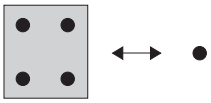

1 to M
Move from a specified point to pallet.

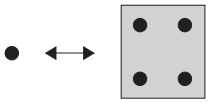

M to M
Move from pallet to pallet.

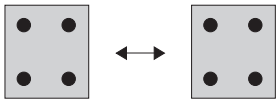

Master(Scanner) unit KCA-25-M10, KCA-25-M40, KCA-25-M80

[Details of system I/O] * For the list of I/O pin numbers, refer to page 169.

[System input]

Pin No.	Setting function / Signal name	◇ Sequential mode ◇ Palletizing mode	◇ External point designation mode	Remarks
28	Origin return	ON: Start of origin return operation	Same as left	Detection of rising edge 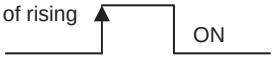 ON
29	Start	ON: Restart from currently stopped step or from temporary stop status	ON: Start of axis travel based on currently specified table information	Detection of rising edge 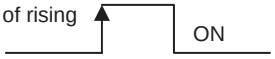 ON
30	Stop	ON: Stop after current step has been executed	Disabled	When this input is ON, origin return and start input are disabled.
31	Reset	ON: Cancel abnormal condition (Effective while program execution is stopped)	ON: Cancel abnormal condition	

[System output]

Pin No.	Setting function / Signal name	◇ Sequential mode ◇ Palletizing mode	◇ External point designation mode	Remarks
11	Operating	ON during program execution and origin return operation	ON during robot operation and origin return	
12	Error	ON in abnormal conditions	Same as left	
13	Positioning complete	ON when robot positioning has completed OFF during robot travel (OFF when robot is paused)	Same as left	
14	Origin return complete	ON when origin return is unnecessary at execution of travel commands. OFF when origin return is necessary.	Same as left	

[Input and output that can be set to general purpose I/O port]

Signal name	* Setting function I/O	◇ Sequential mode ◇ Palletizing mode	◇ External point designation mode
Robot single operation	Input	The single operation mode is operative when this input is on with the start input or start key set on. In this mode, the program stops after axis travel commands and output commands are executed.	Disabled
Restart	Input	Even if the power is turned off or reset while this input is ON, the contents of counter, etc., are not cleared.	Disabled
Escape	Input	When this input is ON during execution of MVE command, an axis slows down and stops, and the system interprets that the relevant step has finished.	Disabled
Pause (temporary stop)	Input	ON: temporary stop (slowdown and stop) To restart, set the start input to ON. To cancel, set the reset to ON.	
Program selection 2^0 Program selection 2^1 Program selection 2^2 Program selection 2^3	Input	Input signal for specifying a program No. (No.1 to No.16) at program selection.	Disabled
Palletizing	Input	ON: palletizing mode, OFF: sequential mode While the external point designation is selected, this input is disabled.	Disabled
Awaiting input	Output	ON when waiting for an input in the program	Disabled
Paused	Output	ON when an axis has slowed down and stopped after recognizing pause input. (OFF when the pause mode is canceled.)	
READY	Output	ON when the handy terminal and RS232C are disabled and no abnormalities are generated	
Servo ON	Input	ON: Servo lock enabled. OFF: Servo lock disabled.	
Battery alarm	Output	ON when the backup power voltage of at least one of the controllers is low and OFF when the backup power voltage of all controllers has been restored. Disabled when the encoder settings are incremental.	
Positioning by task complete	Output	ON when positioning is completed for each task.	
Origin return by task complete	Output	ON when origin return is completed for each task.	
Torque limit 2^0 Torque limit 2^1 Torque limit 2^2	Input	The input signal specified by the torque limit table (Table 8) when the max. torque limit function is in use.	

Master(Scanner) unit KCA-25-M10, KCA-25-M40, KCA-25-M80
[I/O connection example]

NPN I/O

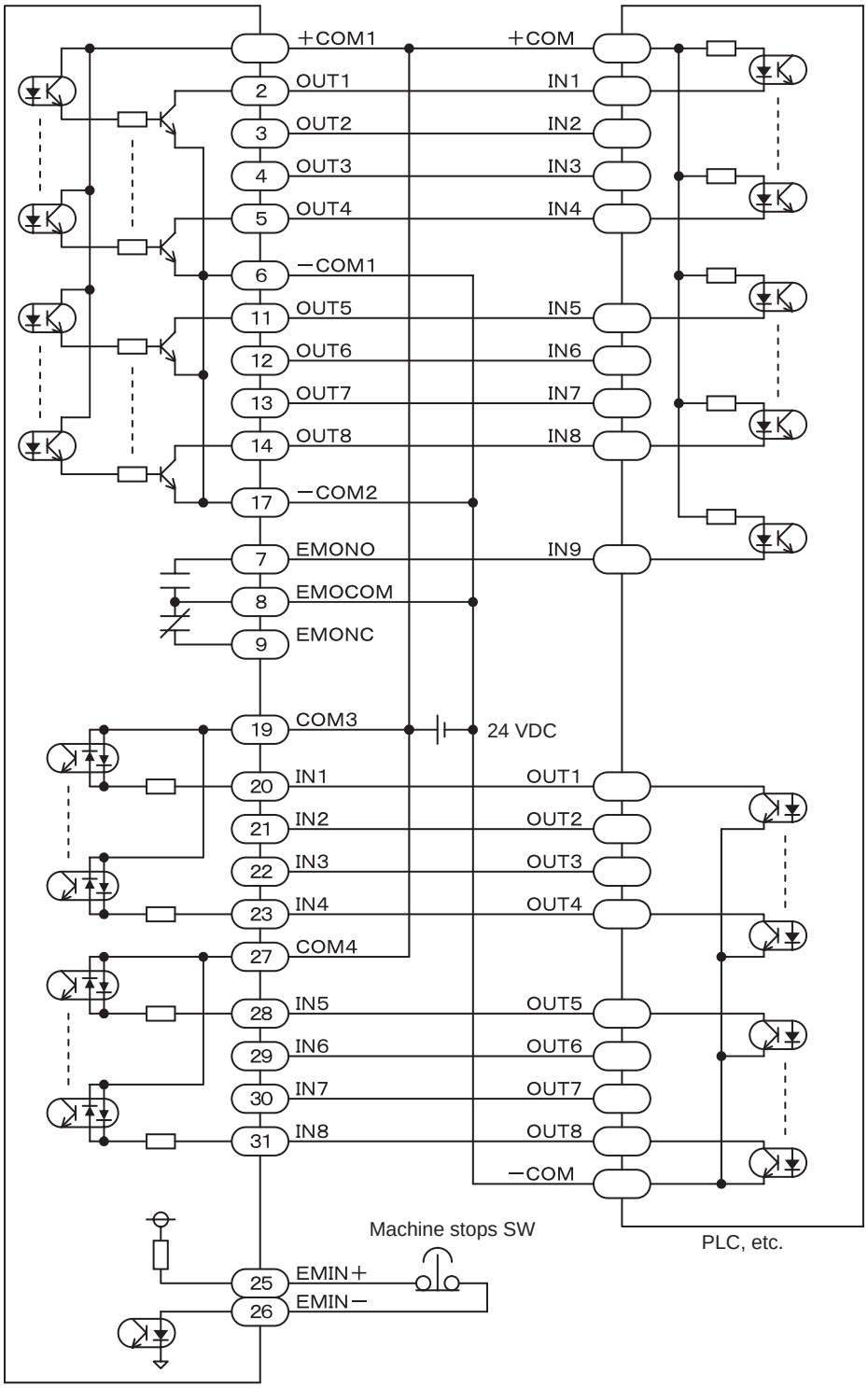

CAUTION

- −COM1 and −COM2 are connected internally.
- COM3 and COM4 are not connected internally.

Master(Scanner) unit KCA-25-M10, KCA-25-M40, KCA-25-M80
[I/O connection example]

PNP I/O

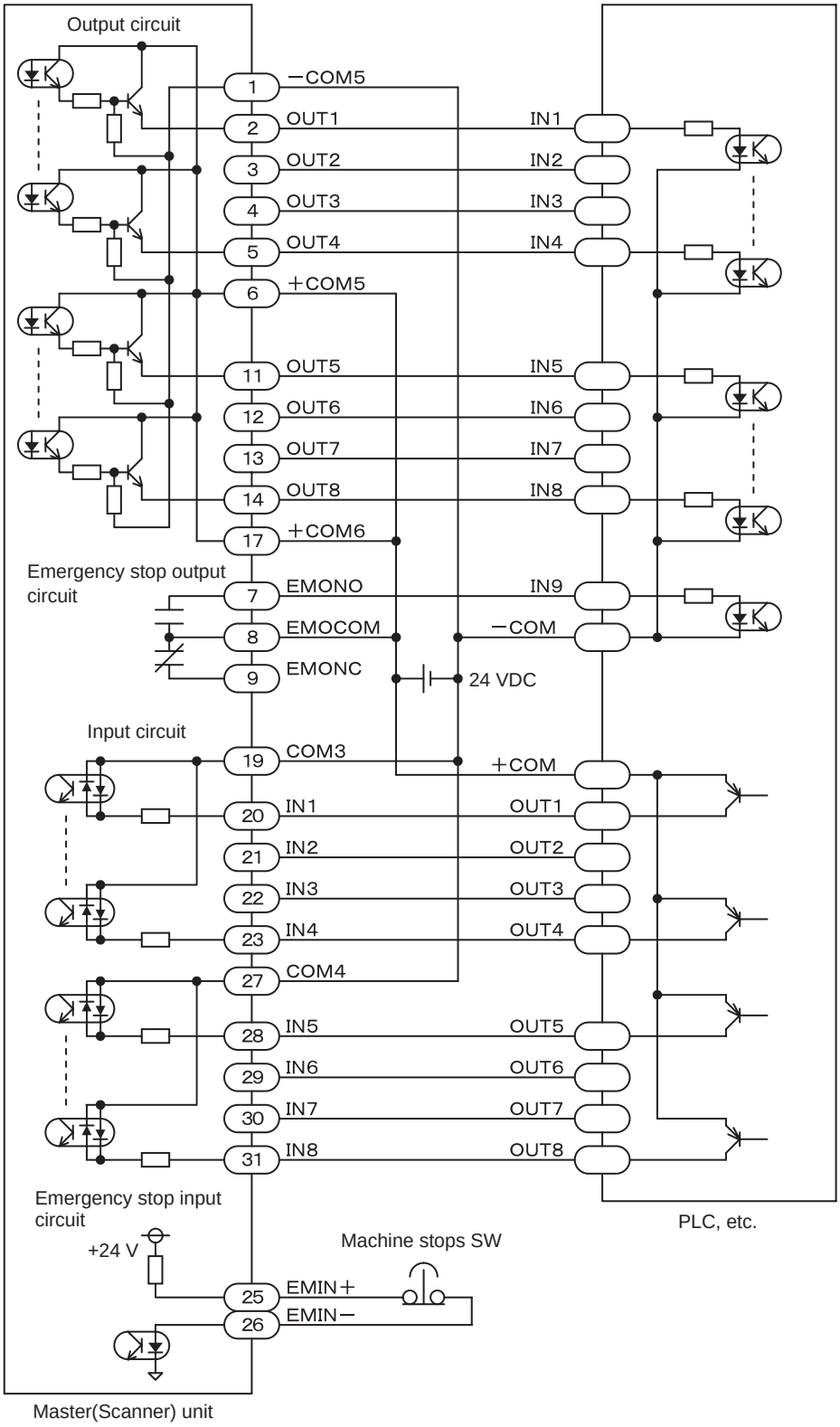

CAUTION
- +COM5 and +COM6 are connected internally.
- COM3 and COM4 are not connected internally.

Master(Scanner) unit KCA-25-M10, KCA-25-M40, KCA-25-M80 [Extension I/O unit connection example]

NPN I/O

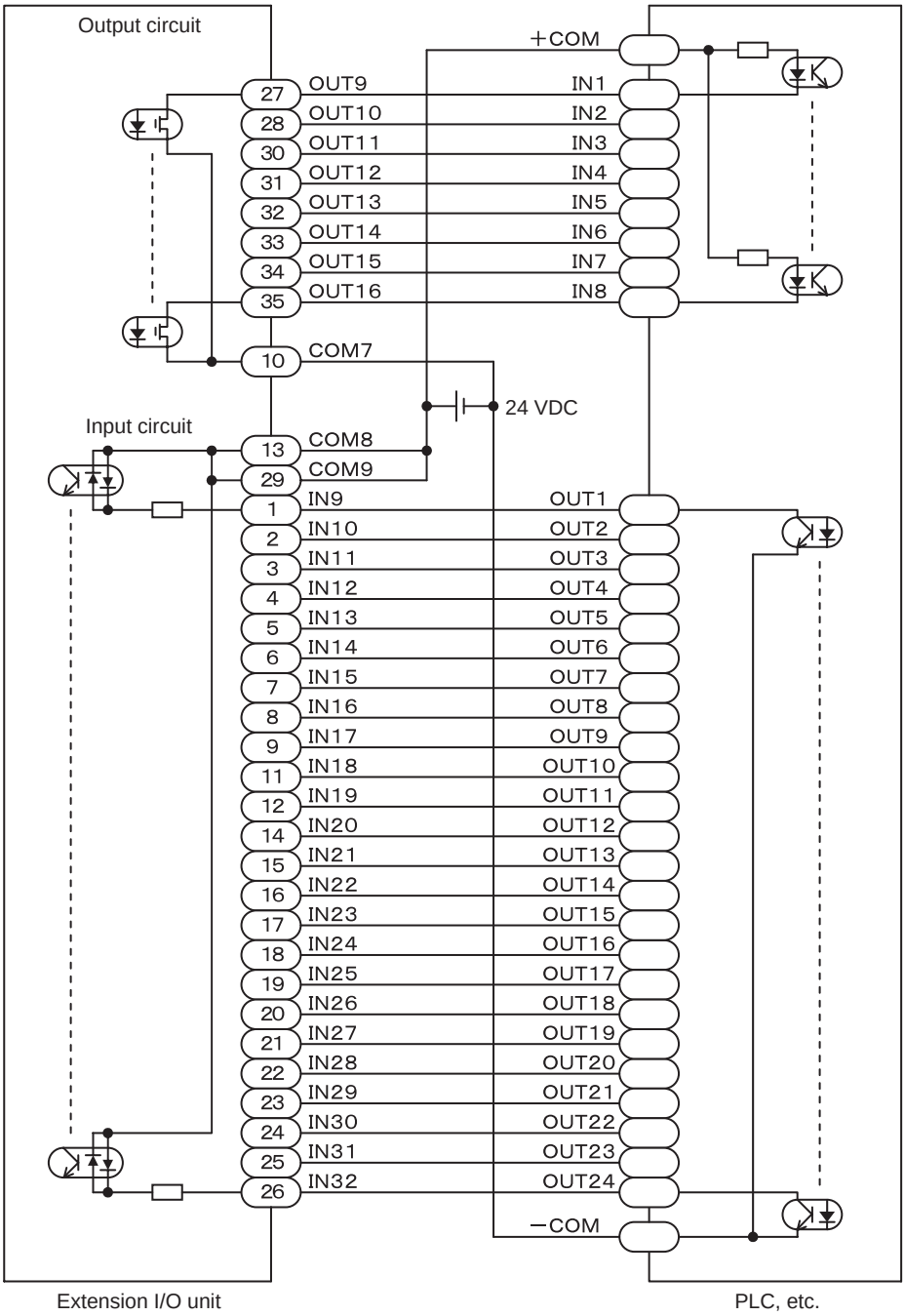

CAUTION

- COM7 is not connected to COM8 and COM9.
- COM8 and COM9 are connected internally.

Master(Scanner) unit KCA-25-M10, KCA-25-M40, KCA-25-M80
[Extension I/O unit connection example]

PNP I/O

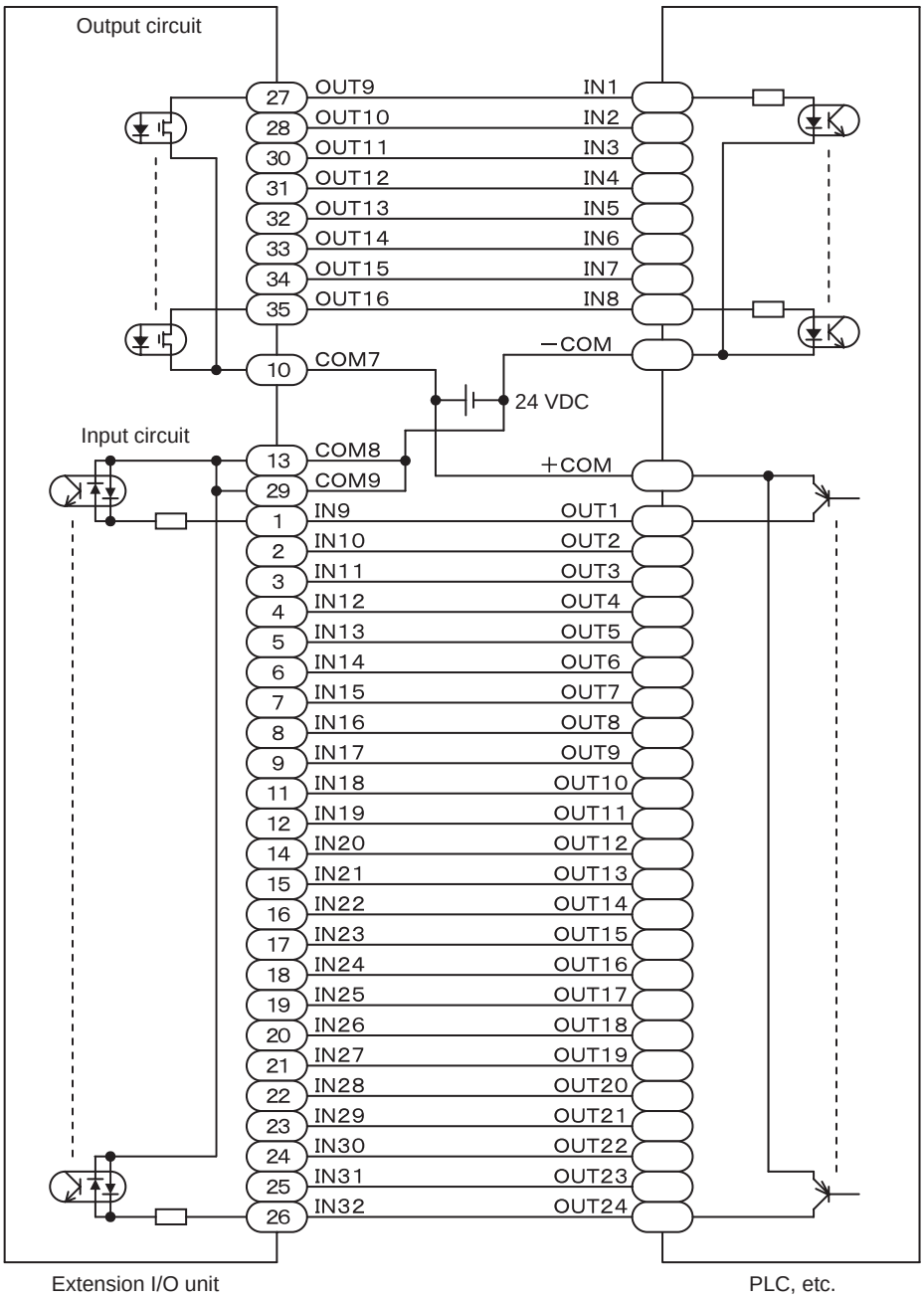

CAUTION

- COM7 is not connected to COM8 and COM9.
- COM8 and COM9 are connected internally.

Master(Scanner) unit KCA-25-M10, KCA-25-M40, KCA-25-M80 [CC-Link dedicated cable connections]

The order of cable connections is not related to the station No.
Always connect terminating resistors with units on both ends of the CC-Link system.
Connect each terminating resistor between DA and DB.
In the CC-Link system, terminating resistors to be connected differ depending on the cables used.

Cable	Terminating resistor
CC-Link dedicated cable	110 Ω 1/2 W (brown, brown, brown)
CC-Link dedicated cable for Ver 1.10	
CC-Link specially dedicated high-performance cable	130 Ω 1/2 W (brown, orange, brown)

This controller is not equipped with terminating resistors.
Cables can be connected to the master(scanner) unit in places other than the ends.
Star connection is not possible.
Connection method is shown below.

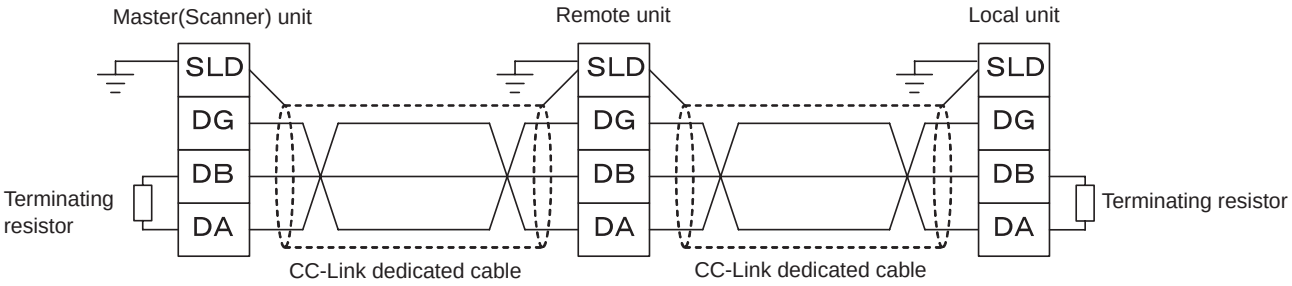

Refer to the master(scanner) station instruction manual and the CC-Link lay manual (issued by the CC-Link Partner Association) for details on cable connections.

* When noise causes communication malfunction, reconfirm the ground installation conditions.
* CC-Link dedicated cable is not supplied.

[System I/O]

(1) System input (CC-Link master(scanner) station → KCA-25-M10-*CC)

Signal name	Remote output	Normal mode	External point designation mode	Remarks
Origin return	RYn0	ON: Start of origin return operation	Origin return	Detection of rising edge ON ON
Start	RYn1	ON: Restart from currently stopped step or from pause status	ON: Start of axis travel based on currently specified table information	
Stop	RYn2	ON: Stop after current step has been executed	Disabled	When this input is ON, origin return and start input are disabled
Reset	RYn3	ON: Cancel abnormal condition (Effective while program execution is stopped)	ON: Cancel abnormal condition	
JOG input	RY(n+4)8 to RY(n+4)F	Jogging of a selected axis by specifying one of the three modes (inching, low-speed travel, high-speed travel) and travel direction.		

(2) System output (KCA-25-M10-*CC → CC-Link master(scanner) station)

Signal name	Remote input	Normal mode	External point designation mode
Operating	RXn0	ON during controller execution and origin return operation	ON during robot operation
Error	RXn1	ON in abnormal conditions	Same as left
Positioning complete	RXn2	ON when robot body positioning has completed OFF during robot body travel (Remains OFF when robot is paused)	Same as left
Origin return complete	RXn3	ON when origin return is complete	Same as left
JOG output	RX(n+4)8 to RX(n+4)F	Displays JOG receptivity and status during operation.	

Master(Scanner) unit KCA-25-M10, KCA-25-M40, KCA-25-M80 [DeviceNet dedicated cable connections]

The order of cable connections is not related to the station No. settings (MAC ID).
Always connect terminating resistors with both ends of the main line. (121 Ω, 1% metal coating, 1/4 W)
Connect each terminating resistor between CANH and CANL.
This controller is not equipped with terminating resistors.

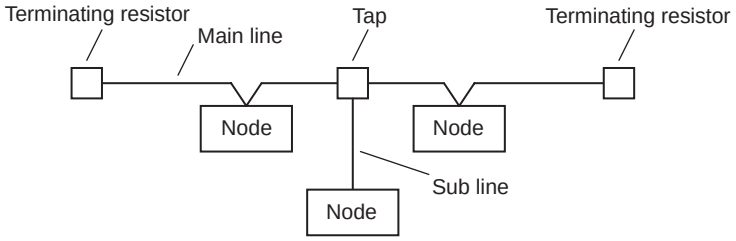

Refer to the master(scanner) station instruction manual or ODVA issued documents for details on cable connections.

[System I/O]

(1) System input (DeviceNet master(scanner) station → KCA-25-M10-*DC)

Signal name	Output device (*1)	Normal mode	External point designation mode	Remarks
Origin return	+0	ON: Start of origin return operation	Origin return	Detection of rising edge ON ON
Start input	+1	ON: Restart from currently stopped step or from pause status	ON: Start of axis travel based on currently specified table information	
Stop input	+2	ON: Stop after current step has been executed	Disabled	When this input is ON, origin return and start input are disabled
Reset input	+3	ON: Cancel abnormal condition (Effective while program execution is stopped)	ON: Cancel abnormal condition	
JOG input	+72 to +79	Jogging of a selected axis by specifying one of the three modes (inching, low-speed travel, high-speed travel) and travel direction.		

(*1) The amount of offset from the lead device. (Unit: bit)

(2) System output (KCA-25-M10-*DC → DeviceNet master(scanner) station)

Signal name	Input device (*1)	Normal mode	External point designation mode
Operation output	+0	ON during controller execution and origin return operation	ON during robot operation
Abnormal output	+1	ON in abnormal conditions	Same as left
Positioning completion output	+2	ON when robot body positioning has completed OFF during robot body travel (Remains OFF when robot is paused)	Same as left
Origin return completion output	+3	ON when origin return is complete	Same as left
JOG output	+72 to +79	Displays JOG receptivity and status during operation.	

(*1) The amount of offset from the lead device. (Unit: bit)

Slave(Adapter) unit KCA-25-S10, KCA-25-S40, KCA-25-S80
[I/O connection example]

NPN I/O

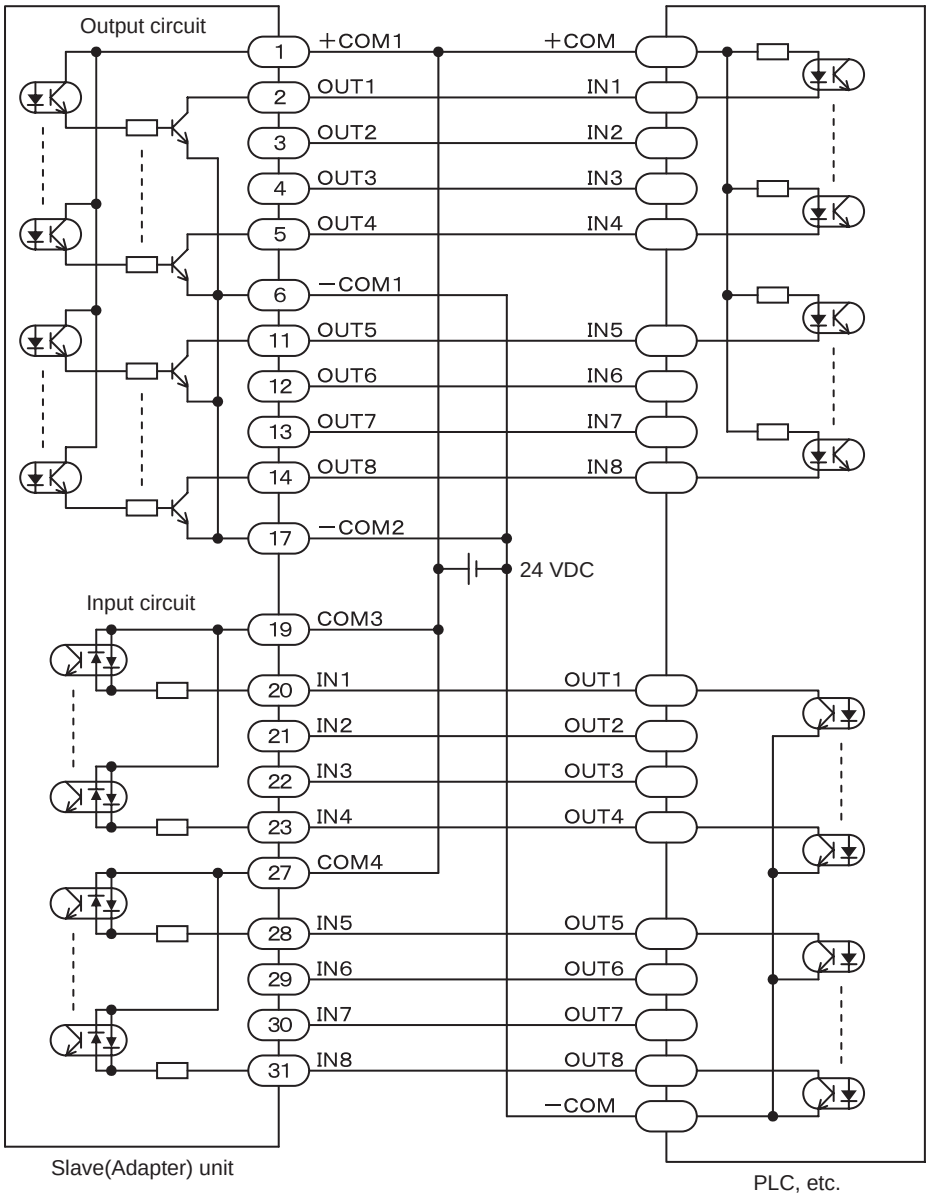

CAUTION

- −COM1 and −COM2 are connected internally.
- COM3 and COM4 are not connected internally.

Slave(Adapter) unit KCA-25-S10, KCA-25-S40, KCA-25-S80
[I/O connection example]

PNP I/O

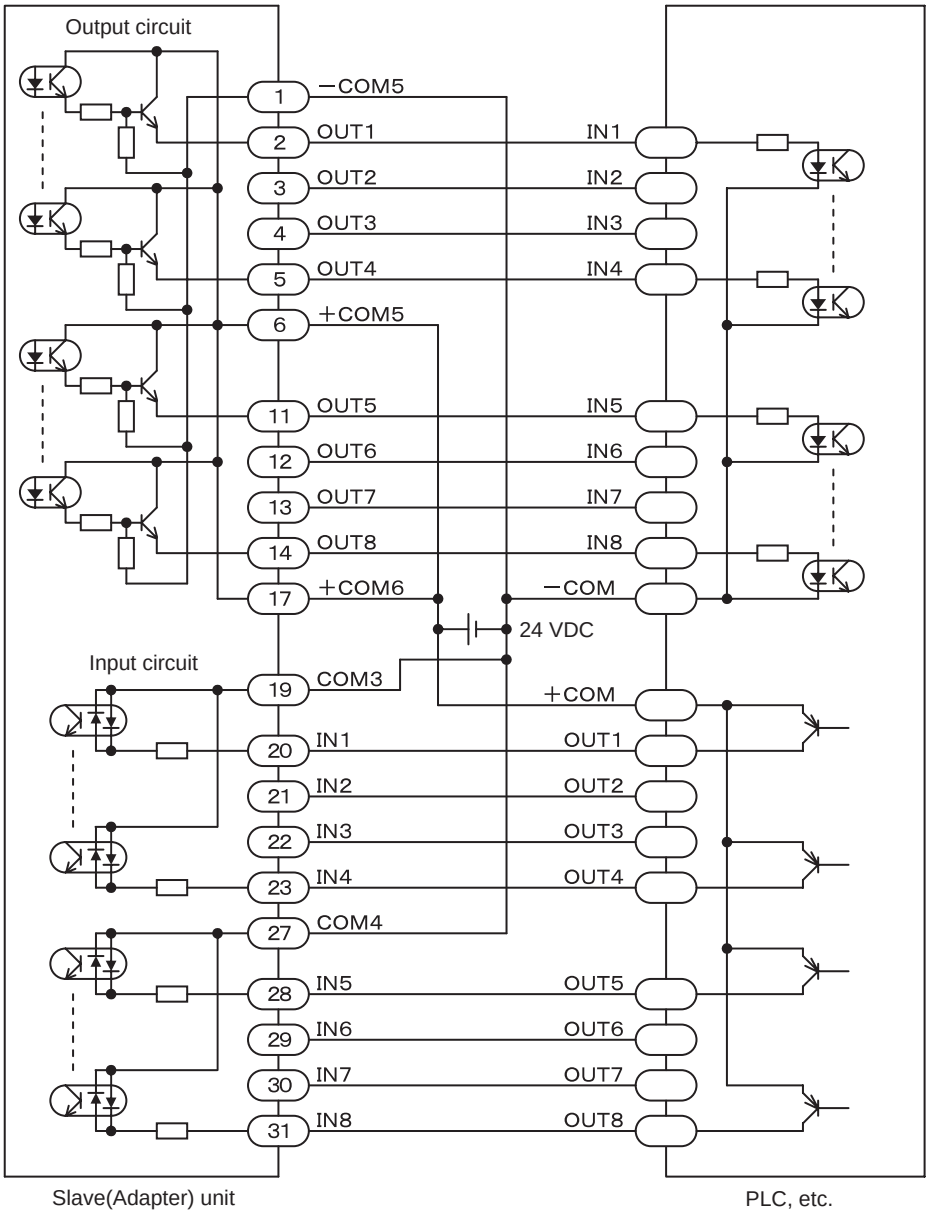

CAUTION

- +COM5 and +COM6 are connected internally.
- COM3 and COM4 are not connected internally.

Tact time calculation method

The tact time of a single actuator is calculated using the method below.
There may be some differences during actual operation, so consider this a guide.
The calculation comes in the two methods: Example calculation 1 (when uniform speed interval is included) and Example calculation 2 (when an axis starts decelerating during acceleration).
Either calculation method is selectable according to the relationship between travel distance, designated speed and designated acceleration/deceleration time.

(1) When "Travel distance (L) > $\dfrac{\text{Designated speed (V)}^2 \times \text{[designated acceleration time (ACC) + designated deceleration time (DEC)]}}{2 \times \text{setting max. speed (Vmax)}}$" ⇒ Example calculation 1

(2) When "Travel distance (L) ≤ $\dfrac{\text{Designated speed (V)}^2 \times \text{[designated acceleration time (ACC) + designated deceleration time (DEC)]}}{2 \times \text{setting max. speed (Vmax)}}$" ⇒ Example calculation 2

★ For the acceleration/deceleration time, refer to the relationship between acceleration/deceleration and load as shown in the next page.
★ For the acceleration/deceleration time and max. speed under max. load capacity, refer to the specifications of each axis.

Example calculation 1

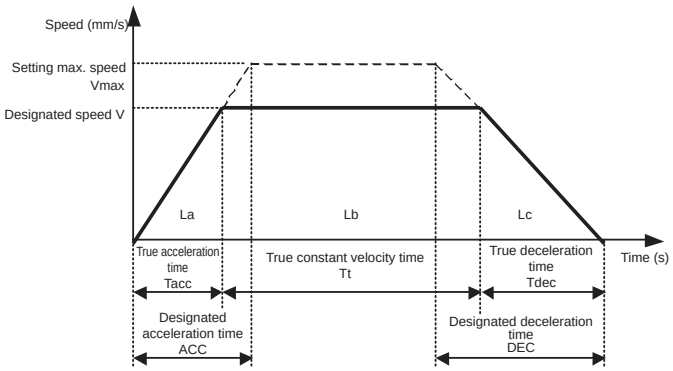

[Operation conditions]
Setting max. speed : Vmax = 800 mm/s
Designated speed : V = 600 mm/s
Designated acceleration time : ACC = 0.2 s
Designated deceleration time : DEC = 0.3 s
Travel distance : L = 400 mm

Tacc = true acceleration time (s)
Tdec = true deceleration time (s)
Tt = true constant velocity time (s)
La = travel distance during acceleration (mm)
Lb = travel distance at constant velocity (mm)
Lc = travel distance during deceleration (mm)
L = travel distance (mm) = La + Lb + Lc

$$Tacc = \frac{V}{Vmax} \times ACC = \frac{600}{800} \times 0.2 = 0.15 \text{ s}$$

$$Tdec = \frac{V}{Vmax} \times DEC = \frac{600}{800} \times 0.3 = 0.225 \text{ s}$$

$$La = \frac{1}{2} \times V \times Tacc = \frac{1}{2} \times 600 \times 0.15 = 45 \text{ mm}$$

$$Lc = \frac{1}{2} \times V \times Tdec = \frac{1}{2} \times 600 \times 0.225 = 67.5 \text{ mm}$$

$$Tt = \frac{L - (La + Lc)}{V} = \frac{400 - (45 + 67.5)}{600} = 0.479 \text{ s}$$

Tact time = true acceleration time + true constant velocity time + true deceleration time
= 0.15 + 0.479 + 0.225
= 0.854 sec.

Example calculation 2

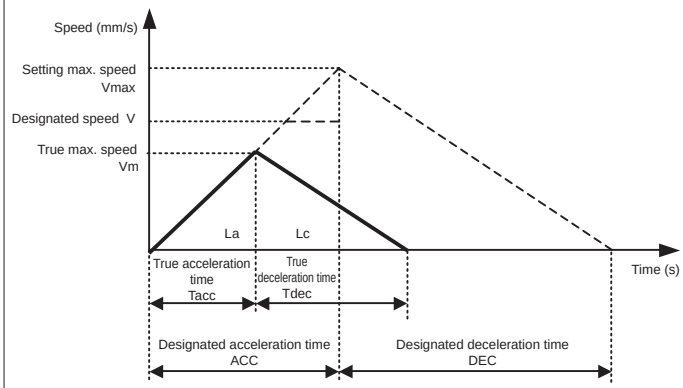

[Operation conditions]
Setting max. speed : Vmax = 800 mm/s
Designated speed : V = 600 mm/s
Designated acceleration time : ACC = 0.2 s
Designated deceleration time : DEC = 0.3 s
Travel distance : L = 100 mm

Tacc = true acceleration time (s)
Tdec = true deceleration time (s)
La = travel distance during acceleration (mm)
Lc = travel distance during deceleration (mm)
Vm = true max. speed (mm/s)
L = travel distance (mm) = La + Lc

$$La = L \times \frac{ACC}{ACC + DEC} = \frac{0.2}{0.2 + 0.3} = 40 \text{ mm}$$

$$Lc = L \times \frac{DEC}{ACC + DEC} = \frac{0.3}{0.2 + 0.3} = 60 \text{ mm}$$

$$Tacc = \sqrt{\frac{2 \times La \times ACC}{Vmax}} = \sqrt{\frac{2 \times 40 \times 0.2}{800}} = 0.141 \text{ s}$$

$$Tdec = \sqrt{\frac{2 \times Lc \times DEC}{Vmax}} = \sqrt{\frac{2 \times 60 \times 0.3}{800}} = 0.212 \text{ s}$$

Tact time = true acceleration time + true deceleration time
= 0.141 + 0.212
= 0.353 sec.

KBX Relationship between acceleration/deceleration and load

Operating conditions

- The intermission time of the travel terminal must be at least 1.0 s.
- Vibration during operation may become an issue depending on the installation conditions (base strength, load eccentricity).
- Load is applied to the top of the slider.
- When the set acceleration/deceleration time is shorter than the standard (stated in the catalog), servo gain (position, speed) must be adjusted. (Operating without adjusting servo gain may cause an overflow error.)
- Servo gain (position, speed) may also need to be changed depending on the stroke.
- The value for vertical installation is the value when using the regenerative discharge unit.
- The times in brackets in the acceleration/deceleration time cells apply to the model with "*1" listed next to the model No.
- The relationship between acceleration/deceleration and load differs depending on the stroke in some models.
  This applies for models with "*2" listed next to the model No. when stroke is 1,000 mm or less.
  This applies for models with "*3" listed next to the model No. when stroke is 1,050 mm or more.

Load capacity (kg)

Drive method	Installation direction	Model No.	Setting speed (mm/s)	Lead (mm)	Acceleration/deceleration time (s) (*1)					
					0.12 (0.09)	0.24 (0.18)	0.36 (0.27)	0.48 (0.36)	0.6 (0.45)	0.72 (0.54)
Ball screw	Horizontal	KBX-10E-**-*20	1200	20	7	11	20	20	20	20
		KBX-10E-**-*10	600	10	20	25	40	40	40	40
		KBX-10E-**-*05	300	5	25	35	80	80	80	80
		KBX-30E-**-*20	1200	20	12	18	30	30	30	30
		KBX-30E-**-*10	600	10	25	35	55	55	55	55
		KBX-30E-**-*05	300	5	25	40	80	80	80	80
		KBX-30F-**-*20	1200	20	25	35	40	40	40	40
		KBX-30F-**-*10	600	10	50	65	80	80	80	80
		KBX-30F-**-*05	300	5	50	70	100	100	100	100
		KBX-50F-**-*20	1200	20	25	40	60	60	60	60
		KBX-50F-**-*10,05	600, 300	10,5	50	75	100	100	100	100
		KBX-50G-**-*20	1200	20	40	70	100	100	100	100
		KBX-50G-**-*10,05	600, 300	10,5	60	100	150	150	150	150
		KBX-60G-**-*20	1200	20	40	70	100	100	100	100
		KBX-60G-**-*10	600	10	60	100	150	150	150	150
		KBX-60J-**-*50 *1	2300	50	10	25	50	50	50	50
		KBX-60J-**-*20 *1	900	20	60	130	200	200	200	200
		KBX-60J-**-*10 *1	450	10	100	180	250	250	250	250
	Vertical	KBX-10E-**-*20B	1200	20	3	4	5	5	5	5
		KBX-10E-**-*10B	600	10	6	9	12	12	12	12
		KBX-10E-**-*05B	300	5	17	20	22	22	22	22
		KBX-30E-**-*20B	1200	20	3	4	5	5	5	5
		KBX-30E-**-*10B	600	10	6	9	12	12	12	12
		KBX-30E-**-*05B	300	5	17	20	22	22	22	22
		KBX-30F-**-*20B	1200	20	6	7	10	10	10	10
		KBX-30F-**-*10B	600	10	14	16	20	20	20	20
		KBX-30F-**-*05B	300	5	30	35	40	40	40	40
		KBX-50F-**-*20B	1200	20	3	3	3	3	3	3
		KBX-50F-**-*10B	600	10	10	15	20	20	20	20
		KBX-50F-**-*05B	300	5	20	30	40	40	40	40
		KBX-50G-**-*20B	1,200	20	20	22	25	25	25	25
		KBX-50G-**-*10B	600	10	30	40	50	50	50	50
		KBX-50G-**-*05B	300	5	40	50	60	60	60	60
		KBX-60G-**-*20B	1200	20	20	22	25	25	25	25
		KBX-60G-**-*10B	600	10	30	40	50	50	50	50
		KBX-60J-**-*20B	900	20	30	40	50	50	50	50
		KBX-60J-**-*10B	450	10	40	70	100	100	100	100

Drive method	Installation direction	Model No.	Setting speed (mm/s)	Lead (mm)	Acceleration/deceleration time (s) (*1)					
					0.1	0.2	0.3	0.4	0.5	0.6
Ball screw	Horizontal	KBX-T5D-ST-M12	800	12	3	4	5	5	5	5
		KBX-T5D-ST-M06	400	6	6	8	10	10	10	10
		KBX-T7D-ST-M12	800	12	4	5	12	12	12	12
		KBX-T7D-ST-M06	400	6	10	15	30	30	30	30
	Vertical	KBX-T5D-ST-M12B	800	12	1	1.2	1.5	1.5	1.5	1.5
		KBX-T5D-ST-M06B	400	6	2	2.5	3	3	3	3
		KBX-T7D-ST-M12B	800	12	1	2	4	4	4	4
		KBX-T7D-ST-M06B	400	6	3	5	8	8	8	8
Belt	Horizontal	KBX-10E-B*-*21	1000	21	5	10	15	15	15	15
		KBX-10F-B*-*21	1000	21	10	15	20	20	20	20
		KBX-10F-B*-*42	2000	42	2	4	6	8	10	10
		KBX-30E-B*-*21	1000	21	5	10	15	15	15	15
		KBX-30F-B*-*21	1000	21	10	20	40	40	40	40
		KBX-30F-B*-*42	2000	42	6	10	12	14	20	20
		KBX-50F-B*-*21	1000	21	10	20	40	40	40	40
		KBX-50G-B*-*42	2000	42	7	10	12	14	20	20
		KBX-50G-BT-L19 *2	1000	19.555	40	70	100	100	100	100
		KBX-50G-BT-L19 *3	1000	19.555	15	30	50	60	80	100
		KBX-60J-BT-*19 *2	1000	19.555	60	130	200	200	200	200
		KBX-60J-BT-*19 *3	1000	19.555	30	60	100	120	150	200

(*1) Acceleration/deceleration time is the time it takes to reach the speed specified in the table.

Product service life

The max. load capacity and allowable moment of load in the catalog are calculated from the service life of the guide and the ball screw.
Common between the slider, table, and rod types.

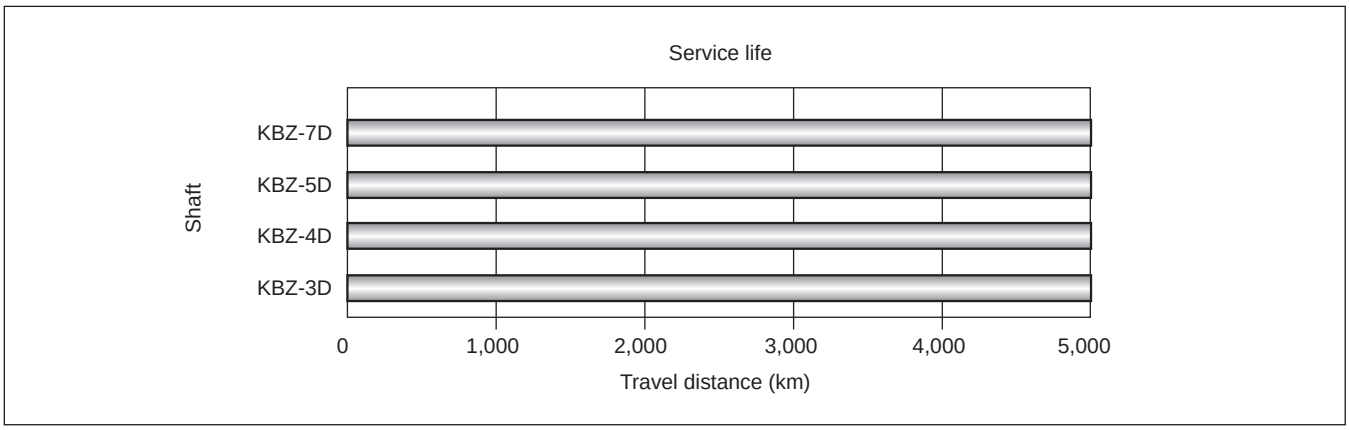

Allowable moment of load

Since the moment caused by a load imposed on the shaft body largely affects the slider bearing unit, the following matters should be considered during use.

* Do not apply load exceeding the max. load capacity.
  This value is determined based on servo motor capacity. It differs with the acceleration/deceleration time.
* Do not exceed the static allowable moment of load.
  This moment is applied when stopped. For inserting work by using a cylinder mounted to the slider, reaction force should be considered.
  Do not apply impact or load.
* Do not exceed the dynamic allowable moment of load.
  This moment is generated during acceleration/deceleration.
  Calculation is required since the value varies with the load, arm length, direction, etc., but refer to the value given in the table below as a rough guide.

1. Static allowable moment of load

MR: rolling moment
MP: pitching moment
MY: yawing moment

● Slider: center of the slider

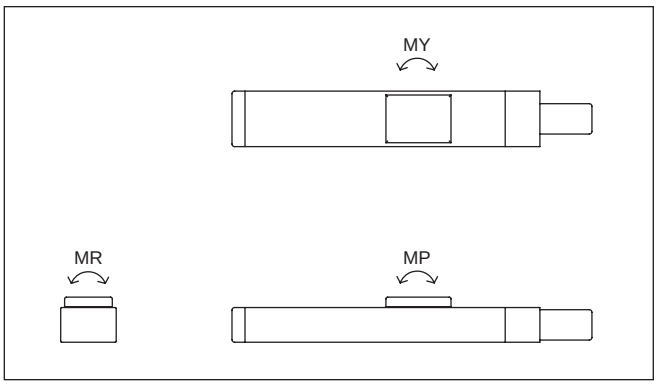

● Table type: center of the front end of the + stroke limit position table

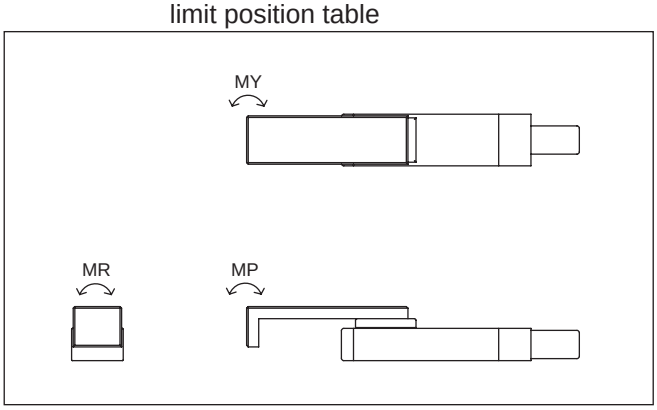

Static allowable moment of load N·m		MR		MP		MY	
Axis		KBZ-5D	KBZ-7D	KBZ-5D	KBZ-7D	KBZ-5D	KBZ-7D
Slider		31	58	12	25.7	12	25.7
Table type	Stroke 50 mm	4.4	11.7	1.9	3.8	1.9	3.8
	Stroke 100 mm	4.4	11.7	1.2	2.3	1.2	2.3
	Stroke 150 mm	-	11.7	-	1.7	-	1.7

2. Dynamic allowable moment of load

Dynamic moment of load of a shaft body largely influences its service life and performance. Acceleration/deceleration time (acceleration) load, arm length, direction, speed, stroke, etc. must be considered based on the dynamic allowable moment of load.
In the following pages, there are tables of dynamic allowable moment of load listing the load and allowable arm length so that the dynamic allowable moment of load can be obtained easily.
Load weight W [kg] and arm length up to the center of gravity of the load L [mm] are shown in each table. (This is not the value for allowable moment of load.)

[Dynamic allowable moment of load table] KBZ-5D, -7D slider

Load weight W [kg] and arm length up to the center of gravity of the load L [mm] are shown in each table.
(This is not the value for allowable moment of load.)

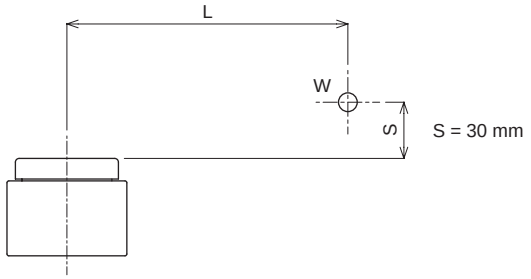

[Horizontal mounting]

	Lead	Speed	W [kg]	0.5	1.0	1.5	2.0	2.5	3.0	3.5	4.0	4.5	5.0	5.5	6.0
KBZ-5D	6	400	L [mm]	950	510	350	260	210	175	145	125	110	95	85	75
	12	800	L [mm]	840	455	310	230	185	150	-	-	-	-	-	-

	Lead	Speed	W [kg]	1.0	2.0	3.0	4.0	5.0	6.0	7.0	8.0	9.0	10.0	11.0	12.0
KBZ-7D	6	400	L [mm]	1100	610	420	310	240	200	160	140	120	105	95	85
	12	800	L [mm]	995	530	355	265	210	175	-	-	-	-	-	-

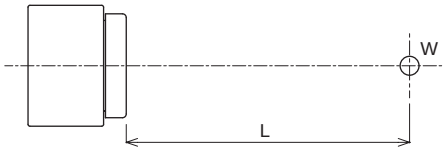

[Horizontal mounting] wall mounting

	Lead	Speed	W [kg]	0.5	1.0	1.5	2.0	2.5	3.0	3.5	4.0	4.5	5.0	5.5	6.0
KBZ-5D	6	400	L [mm]	1290	620	405	295	230	185	155	130	115	100	85	75
	12	800	L [mm]	1230	600	390	285	220	175	-	-	-	-	-	-

	Lead	Speed	W [kg]	1.0	2.0	3.0	4.0	5.0	6.0	7.0	8.0	9.0	10.0	11.0	12.0
KBZ-7D	6	400	L [mm]	1440	705	460	335	260	215	180	150	130	115	100	90
	12	800	L [mm]	1425	695	455	330	260	215	-	-	-	-	-	-

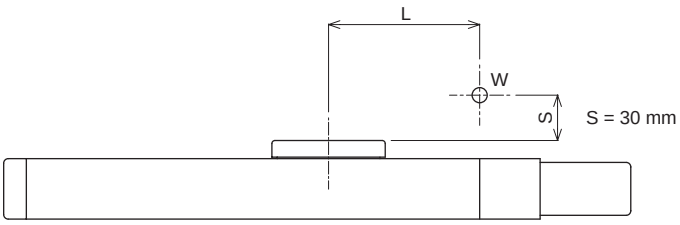

[Horizontal mounting]

	Lead	Speed	W [kg]	0.5	1.0	1.5	2.0	2.5	3.0	3.5	4.0	4.5	5.0	5.5	6.0
KBZ-5D	6	400	L [mm]	650	380	260	200	165	135	115	100	90	80	70	60
	12	800	L [mm]	580	335	235	175	145	120	-	-	-	-	-	-

	Lead	Speed	W [kg]	1.0	2.0	3.0	4.0	5.0	6.0	7.0	8.0	9.0	10.0	11.0	12.0
KBZ-7D	6	400	L [mm]	650	375	265	200	160	135	115	100	85	70	65	55
	12	800	L [mm]	575	330	230	175	140	115	-	-	-	-	-	-

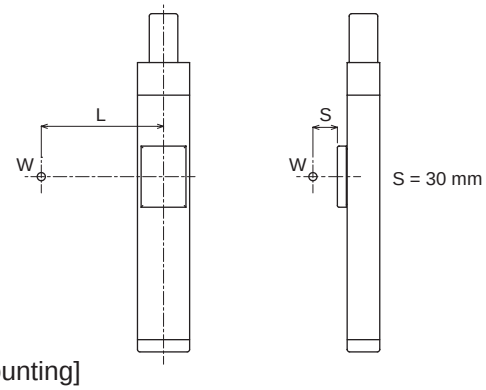

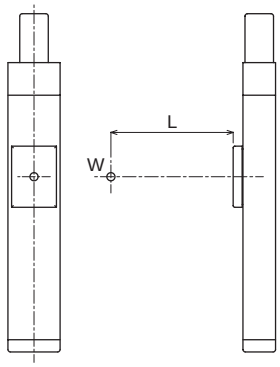

[Vertical mounting]

KBZ-	Lead	Speed	W [kg]	0.5	1.0	1.5	2.0	2.5	3.0
5D	6	400	L [mm]	700	330	200	140	100	75
	12	800	L [mm]	660	305	185	-	-	-

KBZ-	Lead	Speed	W [kg]	1.0	2.0	3.0	4.0
7D	6	400	L [mm]	680	315	195	130
	12	800	L [mm]	600	300	-	-

KBZ-	Lead	Speed	W [kg]	0.5	1.0	1.5	2.0	2.5	3.0
5D	6	400	L [mm]	730	360	230	170	130	105
	12	800	L [mm]	690	330	215	-	-	-

KBZ-	Lead	Speed	W [kg]	1.0	2.0	3.0	4.0
7D	6	400	L [mm]	630	340	220	160
	12	800	L [mm]	630	330	-	-

[Dynamic allowable moment of load table] KBZ-5D, -7D table type

Load weight W [kg] and arm length up to the center of gravity of the load L [mm] are shown in each table.
(This is not the value for allowable moment of load.)

[Horizontal mounting]

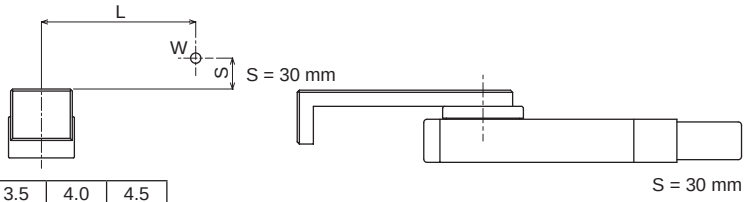

★ Stroke length 100 mm

KBZ-	Lead	Speed	W [kg]	1.0	1.5	2.0	2.5	3.0
5D	6	400	L [mm]	185	60	-	-	-
	12	800	L [mm]	95	5	-	-	-

★ Stroke length 50 mm

KBZ-	Lead	Speed	W [kg]	1.0	1.5	2.0	2.5	3.0	3.5	4.0	4.5
5D	6	400	L [mm]	255	130	60	15	-	-	-	-
	12	800	L [mm]	190	85	25	-	-	-	-	-

★ Stroke length 150 mm

KBZ-	Lead	Speed	W [kg]	1.0	1.5	2.0	2.5	2.9	3.4	3.8
7D	6	400	L [mm]	450	230	130	20	-	-	-
	12	800	L [mm]	370	160	45	-	-	-	-

★ Stroke length 100 mm

KBZ-	Lead	Speed	W [kg]	1.0	1.5	2.0	2.5	2.8	3.3	3.8	4.3	4.8	5.3	5.6
7D	6	400	L [mm]	600	350	210	120	80	25	-	-	-	-	-
	12	800	L [mm]	500	280	150	65	20	-	-	-	-	-	-

★ Stroke length 50 mm

KBZ-	Lead	Speed	W [kg]	1.0	1.5	2.0	2.5	3.0	3.5	4.0	4.5	5.0	5.5	6.0	6.5	7.0	7.5	8.0	8.5	9.0
7D	6	400	L [mm]	700	450	305	210	145	95	55	20	-	-	-	-	-	-	-	-	-
	12	800	L [mm]	540	340	220	140	85	45	15	-	-	-	-	-	-	-	-	-	-

[Horizontal mounting] wall mounting

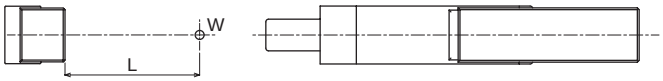

★ Stroke length 100 mm

KBZ-	Lead	Speed	W [kg]	1.0	1.5	2.0	2.5	3.0
5D	6	400	L [mm]	340	130	30	-	-
	12	800	L [mm]	290	80	-	-	-

★ Stroke length 50 mm

KBZ-	Lead	Speed	W [kg]	1.0	1.5	2.0	2.5	3.0	3.5	4.0	4.5
5D	6	400	L [mm]	420	210	100	40	-	-	-	-
	12	800	L [mm]	390	180	70	0	-	-	-	-

★ Stroke length 150 mm

KBZ-	Lead	Speed	W [kg]	1.0	1.5	1.9	2.5	3.0	3.5	3.8
7D	6	400	L [mm]	950	500	310	160	70	-	-
	12	800	L [mm]	920	460	260	-	-	-	-

★ Stroke length 100 mm

KBZ-	Lead	Speed	W [kg]	1.0	1.5	2.0	2.5	2.8	3.5	4.0	4.5	5.0	5.5	5.6
7D	6	400	L [mm]	1060	600	370	230	170	90	40	-	-	-	-
	12	800	L [mm]	1040	570	330	190	120	-	-	-	-	-	-

★ Stroke length 50 mm

KBZ-	Lead	Speed	W [kg]	1.0	1.5	2.0	2.5	3.0	3.5	4.0	4.5	5.0	5.5	6.0	6.5	7.0	7.5	8.0	8.5	9.0
7D	6	400	L [mm]	1170	700	450	310	220	150	100	60	30	-	-	-	-	-	-	-	-
	12	800	L [mm]	1150	670	430	290	190	120	65	20	-	-	-	-	-	-	-	-	-

[Horizontal mounting]

★ Stroke length 100 mm

KBZ-	Lead	Speed	W [kg]	1.0	1.5	2.0	2.5	3.0
5D	6	400	L [mm]	95	30	-15	-40	-65
	12	800	L [mm]	60	5	-	-	-

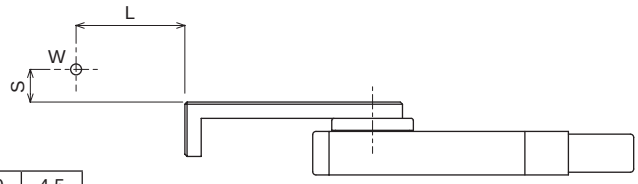

S = 30 mm

★ Stroke length 50 mm

KBZ-	Lead	Speed	W [kg]	1.0	1.5	2.0	2.5	3.0	3.5	4.0	4.5
5D	6	400	L [mm]	155	85	40	10	-10	-30	-45	-60
	12	800	L [mm]	125	60	20	-	-	-	-	-

★ Stroke length 150 mm

KBZ-	Lead	Speed	W [kg]	1.0	1.5	2.0	2.5	3.0	3.5	3.8
7D	6	400	L [mm]	185	100	50	10	-25	-50	-70
	12	800	L [mm]	130	55	15	-	-	-	-

★ Stroke length 100 mm

KBZ-	Lead	Speed	W [kg]	1.0	1.5	2.0	2.5	2.8	3.5	4.0	4.5	5.0	5.5	5.6
7D	6	400	L [mm]	255	165	100	60	35	10	-15	-35	-50	-65	-75
	12	800	L [mm]	200	120	65	25	5	-	-	-	-	-	-

★ Stroke length 50 mm

KBZ-	Lead	Speed	W [kg]	1.0	1.5	2.0	2.5	3.0	3.5	4.0	4.5	5.0	5.5	6.0	6.5	7.0	7.5	8.0	8.5	9.0
7D	6	400	L [mm]	300	230	160	115	80	50	30	10	-5	-20	-30	-40	-50	-60	-65	-70	-75
	12	800	L [mm]	270	180	120	80	50	25	5	-10	-	-	-	-	-	-	-	-	-

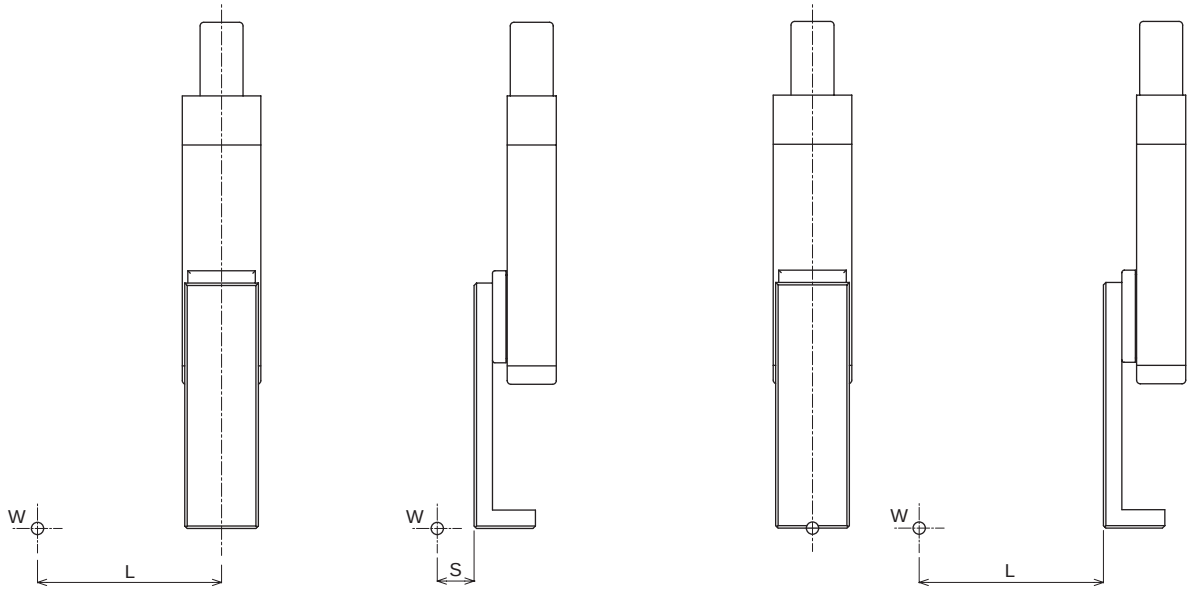

S = 30 mm

[Vertical mounting]

KBZ-	Lead	Speed	W [kg]	1.0	1.5	2.0	2.5	3.0
5D	6	400	L [mm]	240	160	115	75	55
	12	800	L [mm]	270	-	-	-	-

KBZ-	Lead	Speed	W [kg]	1.0	1.5	2.0	2.5	3.0	3.5	4.0
7D	6	400	L [mm]	570	315	245	200	165	135	110
	12	800	L [mm]	430	330	-	-	-	-	-

KBZ-	Lead	Speed	W [kg]	1.0	1.5	2.0	2.5	3.0
5D	6	400	L [mm]	270	190	145	105	85
	12	800	L [mm]	295	-	-	-	-

KBZ-	Lead	Speed	W [kg]	1.0	1.5	2.0	2.5	3.0	3.5	4.0
7D	6	400	L [mm]	440	340	275	195	200	165	140
	12	800	L [mm]	460	360	-	-	-	-	-

Controller KCA-01-M05

[Connection method]

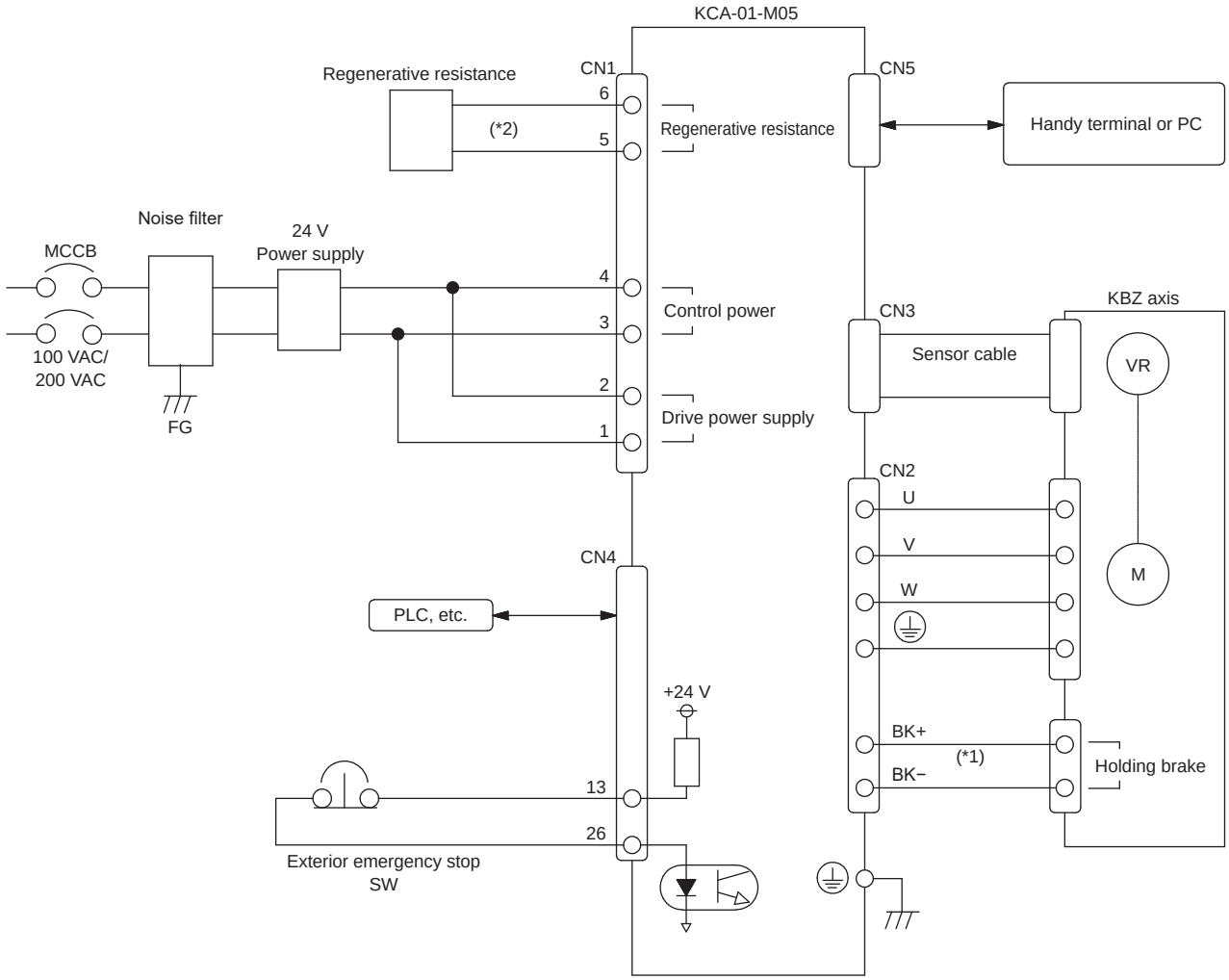

(*1) When using a motor without a holding brake, connection is not required.
(*2) Must be connected when regenerative energy is high.

System I/O details

[System input]

Input No.	Signal name	Descriptions	Remarks
IN1	START	Start input Starts axis operation.	Detected with rising edge.
	+JOG	+JOG input Starts JOG motion in the plus direction.	ON: Moves. OFF: Stops.
IN2	STOP	Stop input Causes forced stop in mid travel operation.	Level detection.
	−JOG	−JOG input Starts JOG motion in the minus direction.	ON: Moves. OFF: Stops.
IN3	SVON	Servo ON input Servo locks the motor.	Servo lock with rising edge. Servo free with lowering edge.
IN4	WRITE	Writing input Writes coordinate values into the point table (T01).	
IN5	ALRST	Error reset input Cancels abnormal conditions.	Detected with rising edge.
IN6	RTSEL	Operating/teaching switch input Switches between operating and teaching mode.	OFF: operation mode. ON: teaching mode.
IN7	PIN1	Directive point No. input Determines each model No. on the point table (T01). Performs origin return when START is turned ON while IN7 to IN10 are all ON.	
IN8	PIN2		
IN9	PIN4		
IN10	PIN8		

[System output]

Input No.	Signal name	Descriptions	Remarks
OUT1	RUN	Operation output A signal that is ON during robot operation. During origin return, JOG motion is also ON.	
OUT2	ERROR	Abnormal output Turns ON when errors occur.	OUT2 selects a function with parameter M13.
	RDY/ERR	READY/Abnormal output Turns ON after control power is turned on and controller initialization is complete. OFF when errors occur.	
OUT3	POSI	Positioning completion output Displays that positioning is complete when the target position is reached. Turns ON after origin return is complete and when position deviation is within the imposition range.	OFF during travel before completion of origin return and with servo free.
OUT4	AREA	Area output The designated output logic signal is output while the axis slider is positioned within the designated coordinates.	This output is disabled before origin return is complete.

During normal operation

OUT5	POUT1	Complete point No. output Outputs the point table numbers designated with IN7 to IN10 after completing travel.	F (=1111) is output when deceleration is stopped with stop input and axis is stopped with emergency stop. 0 (=0000) is output during origin return.
OUT6	POUT2		
OUT7	POUT4		
OUT8	POUT8		

During torque limit operation

OUT5	TQCON	Torque limit operation output ON during torque limit operation.	
OUT6	TQLOAD	Load output Turns ON when output torque exceeds the load output standard value for more than the torque limit set time.	Even after turning ON, it will turn OFF when the output torque goes below the load output standard value.
OUT7	TQLIM	Limit output Turns ON when torque limit continues for more than the torque limit set time.	Even after turning ON, it will turn OFF when the output torque goes below the torque limit value.
OUT8	TQLOCK	Locked ON when locking of movable parts is detected.	

[I/O signal connection example]

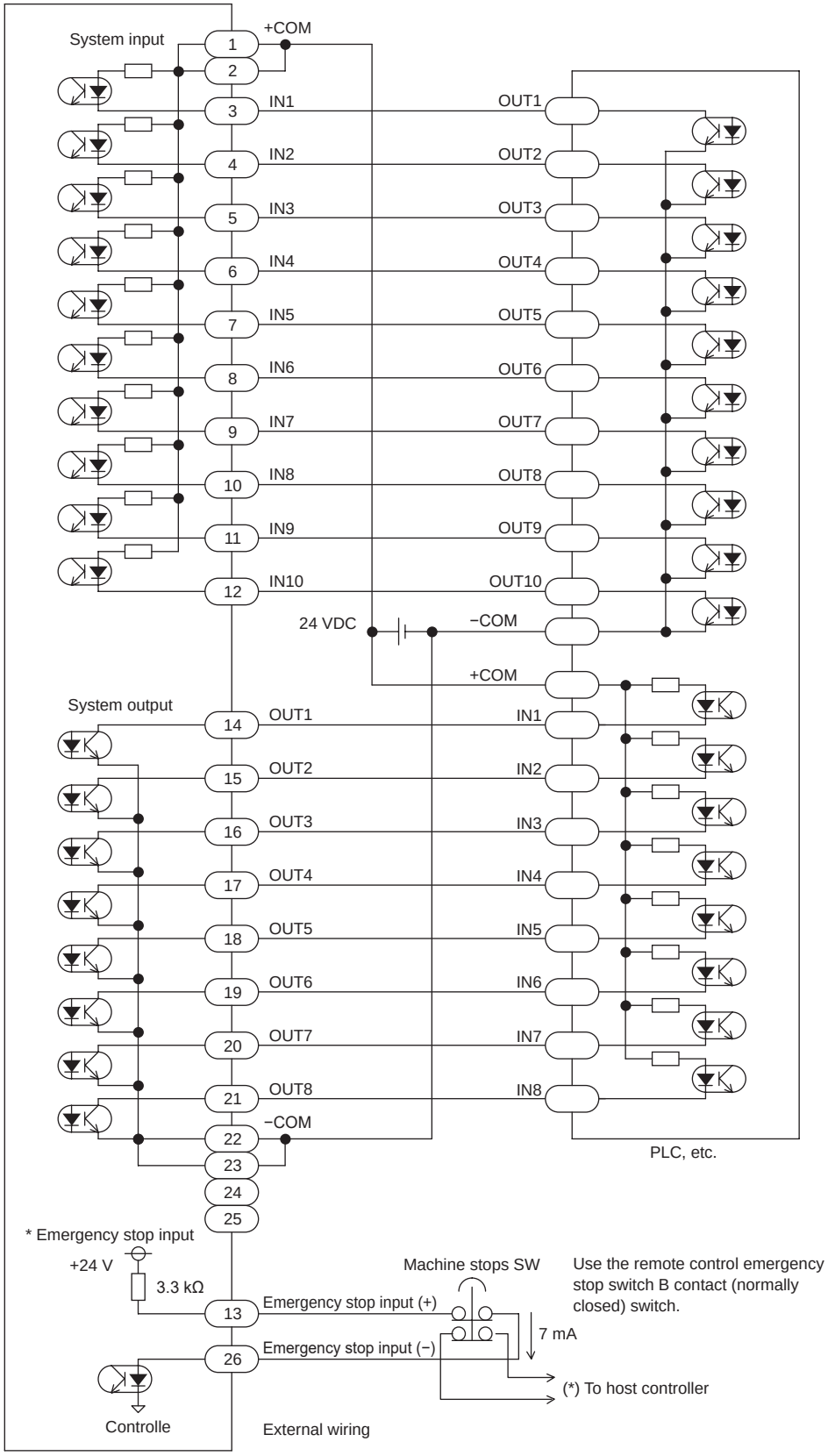

* [Emergency stop input]

Input for emergency stop of the controller. If this circuit is not connected, the controller will be emergency stopped.

(*) This controller has no emergency stop output, so in order to confirm emergency stop input with the host controller, use 2B contact emergency stop switch and connect the contacts of one side to the host controller.

Tact time calculation method

The tact time of a single actuator is calculated using the method below.
There may be some differences during actual operation, so consider this a guide.
The calculation comes in the two methods: Example calculation 1 (when uniform speed interval is included) and Example calculation 2 (when an axis starts decelerating during acceleration).
Either calculation method is selectable according to the relationship between travel distance, designated speed and designated acceleration/deceleration time.

(1) When "Travel distance (L) > $\dfrac{\text{Designated speed (V)}^2 \times \text{[designated acceleration time (ACC) + designated deceleration time (DEC)]}}{2 \times \text{setting max. speed (Vmax)}}$" ⇒ Example calculation 1

(2) When "Travel distance (L) ≤ $\dfrac{\text{Designated speed (V)}^2 \times \text{[designated acceleration time (ACC) + designated deceleration time (DEC)]}}{2 \times \text{setting max. speed (Vmax)}}$" ⇒ Example calculation 2

★ For the acceleration/deceleration time, refer to the relationship between acceleration/deceleration and load as shown in the next page.
★ For the acceleration/deceleration time and max. speed under max. load capacity, refer to the specifications of each axis.

Example calculation 1

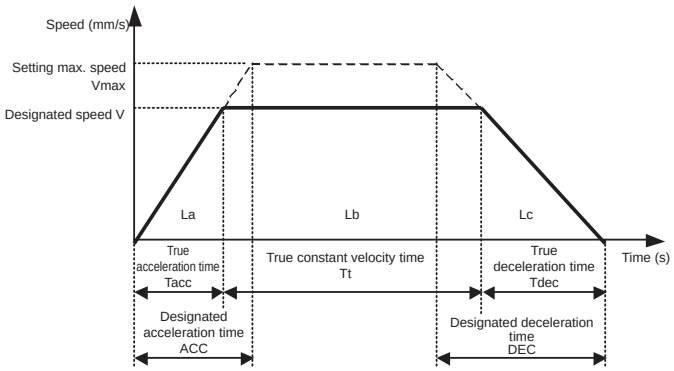

[Operation conditions]
Setting max. speed : Vmax = 800 mm/s
Designated speed : V = 600 mm/s
Designated acceleration time : ACC = 0.2 s
Designated deceleration time : DEC = 0.3 s
Travel distance : L = 400 mm

Tacc = true acceleration time (s)
Tdec = true deceleration time (s)
Tt = true constant velocity time (s)
La = travel distance during acceleration (mm)
Lb = travel distance at constant velocity (mm)
Lc = travel distance during deceleration (mm)
L = travel distance (mm) = La + Lb + Lc

$$Tacc = \frac{V}{Vmax} \times ACC = \frac{600}{800} \times 0.2 = 0.15 \text{ s}$$

$$Tdec = \frac{V}{Vmax} \times DEC = \frac{600}{800} \times 0.3 = 0.225 \text{ s}$$

$$La = \frac{1}{2} \times V \times Tacc = \frac{1}{2} \times 600 \times 0.15 = 45 \text{ mm}$$

$$Lc = \frac{1}{2} \times V \times Tdec = \frac{1}{2} \times 600 \times 0.225 = 67.5 \text{ mm}$$

$$Tt = \frac{L - (La + Lc)}{V} = \frac{400 - (45 + 67.5)}{600} = 0.479 \text{ s}$$

Tact time = true acceleration time + true constant velocity time + true deceleration time
= 0.15 + 0.479 + 0.225
= 0.854 sec.

Example calculation 2

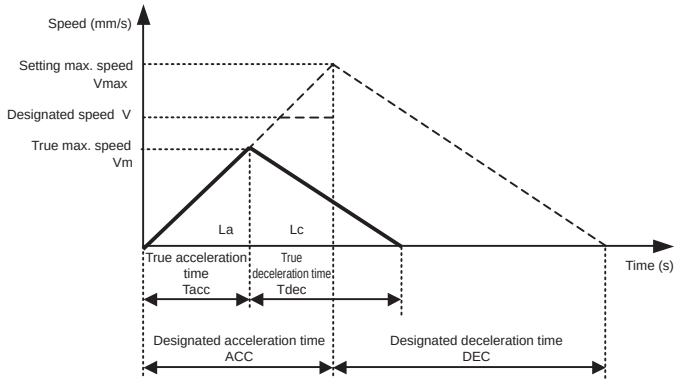

[Operation conditions]
Setting max. speed : Vmax = 800 mm/s
Designated speed : V = 600 mm/s
Designated acceleration time : ACC = 0.2 s
Designated deceleration time : DEC = 0.3 s
Travel distance : L = 100 mm

Tacc = true acceleration time (s)
Tdec = true deceleration time (s)
La = travel distance during acceleration (mm)
Lc = travel distance during deceleration (mm)
Vm = true max. speed (mm/s)
L = travel distance (mm) = La + Lc

$$La = L \times \frac{ACC}{ACC + DEC} = \frac{0.2}{0.2 + 0.3} = 40 \text{ mm}$$

$$Lc = L \times \frac{DEC}{ACC + DEC} = \frac{0.3}{0.2 + 0.3} = 60 \text{ mm}$$

$$Tacc = \sqrt{\frac{2 \times La \times ACC}{Vmax}} = \sqrt{\frac{2 \times 40 \times 0.2}{800}} = 0.141 \text{ s}$$

$$Tdec = \sqrt{\frac{2 \times Lc \times DEC}{Vmax}} = \sqrt{\frac{2 \times 60 \times 0.3}{800}} = 0.212 \text{ s}$$

Tact time = true acceleration time + true deceleration time
= 0.141 + 0.212
= 0.353 sec.

Relationship between acceleration/deceleration and load

Horizontal specifications

Load capacity (kg)

Type	Model No.	Setting speed (mm/s)	Lead (mm)	Acceleration/deceleration time (sec)					
				0.05	0.1	0.15	0.2	0.3	0.4
Slider	KBZ-5D	800	12	-	1.5	2.2	3	3	3
		400	6	3	6	6	6	6	6
	KBZ-7D	800	12	-	3	4.5	6	6	6
		400	6	6	12	12	12	12	12
Table	KBZ-5D 50 mm	800	12	-	1.2	1.8	2.5	2.5	2.5
		400	6	2.2	4.5	4.5	4.5	4.5	4.5
	KBZ-5D 100 mm	800	12	-	0.7	1.1	1.5	1.5	1.5
		400	6	1.5	3	3	3	3	3
	KBZ-7D 50 mm	800	12	-	2.2	3.3	4.5	4.5	4.5
		400	6	4.5	9	9	9	9	9
	KBZ-7D 100 mm	800	12	-	1.4	2.1	2.8	2.8	2.8
		400	6	2.8	5.6	5.6	5.6	5.6	5.6
	KBZ-7D 150 mm	800	12	-	0.9	1.4	1.9	1.9	1.9
		400	6	1.9	3.8	3.8	3.8	3.8	3.8
Rod	KBZ-3D	600	12	-	2	3	3	3	3
	KBZ-4D	600	12	-	3.4	5.2	5.2	5.2	5.2

Vertical specifications

Load capacity (kg)

Type	Model No.	Setting speed (mm/s)	Lead (mm)	Acceleration/deceleration time (sec)					
				0.05	0.1	0.15	0.2	0.3	0.4
Slider	KBZ-5D	800	12	-	0.7	1.3	1.5	1.5	1.5
		400	6	1.5	3	3	3	3	3
	KBZ-7D	800	12	-	1	1.8	2	2	2
		400	6	2	4	4	4	4	4
Table	KBZ-5D	800	12	-	0.5	0.9	1	1	1
		400	6	1.2	2.5	2.5	2.5	2.5	2.5
	KBZ-7D	800	12	-	0.7	1.3	1.5	1.5	1.5
		400	6	1.7	3.5	3.5	3.5	3.5	3.5
Rod	KBZ-3D	600	12	-	1	1.5	1.5	1.5	1.5
	KBZ-4D	600	12	-	1.4	2.2	2.2	2.2	2.2

Relationship between axis thrust and torque limit value

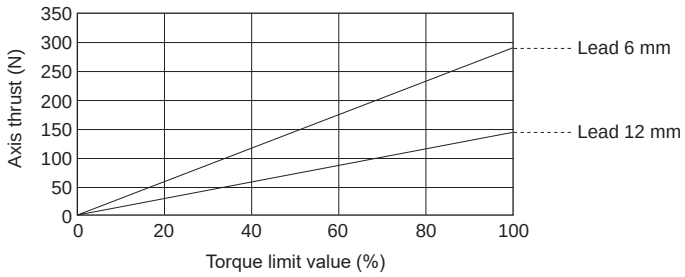

CAUTION Accuracy is not guaranteed. This is only a guideline.
The smaller the torque limit value, the greater the error from sliding resistance.
If the motor continues to produce an output exceeding the rated torque (approx. 33.0%), overload error may occur.

Catalog basic terminology

■ Definitions of Terminology ■

[1st axis / 2nd axis]: When forming an orthogonal axis configuration, an axis which is mounted to the user's equipment is called the "1st axis", and the axis mounted to the 1st axis with a bracket is called the "2nd axis".

[Straight shaft]: An axis whose ball screw and servo motor shaft centers are placed along a straight line.

[Motor Right wrap axis / Left wrap axis / Down wrap axis]: An axis whose servo motor is wrapped, which is coupled with a ball screw via a timing belt. When the motor is located on the right side when seen from the end block side of the shaft body with the slider of the shaft body facing up, this axis is called the "motor right wrap axis". When it is located on the left side and bottom side, the axis is called the "motor left wrap axis" and "motor down wrap axis", respectively.

[Long slider]: Used for the 2nd traveling axis or for an axis on which large moment of load is exerted.

[Medium slider]: Used for the 1st axis of an orthogonal axis configuration or as the standard axis of a single axis configuration.

[Short slider]: Used for a single axis with relatively small moment of load or for the 2nd axis and 3rd axis of an orthogonal axis configuration.

[Work area]: The location of the work area is defined by the side when viewed from the end block side of the 1st axis in an orthogonal axis configuration. (Work area/right side or left side)

[2nd axis slider motor side]: When the 2nd axis slider is seen from the end block side of the 1st axis in an orthogonal axis configuration, and it is located on the rear side of the axis. (When the slider is located on the front side (standard), it is called the "2nd axis slider end side".)

[Axis traveling]: Generally, the frame of the shaft body (axis) is fixed and the slider moves. For the axis traveling, the slider is secured and the frame of the axis moves.
A hand or other tooling is mounted to the end block at the end of the frame.

[Table type]: When in a single or 2-axis orthogonal axis configuration, the slider surface is horizontal and faces up to allow the work from the upper side.

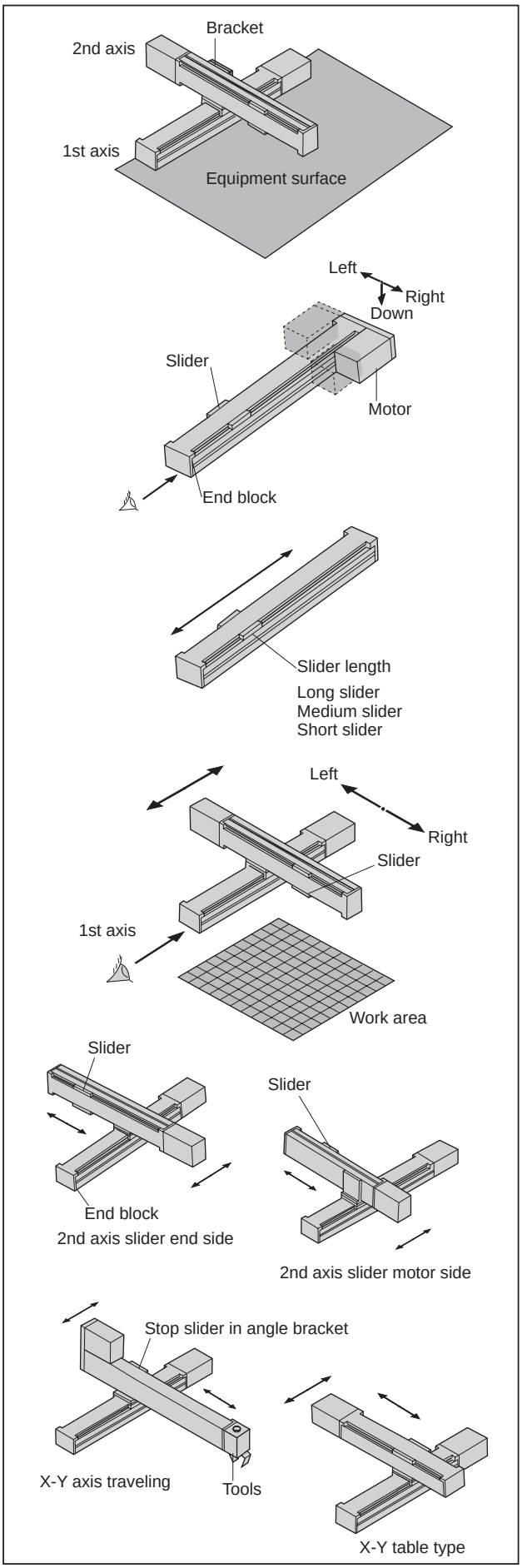

Catalog basic terminology

Terms used in this catalog are described below.

Axis related terminology

[Slider]
The part of the shaft body which moves in a straight line. A hand or other tooling is assembled to the slider.
When a bracket for axis combination is mounted on the slider, a 2-axis system can be configured.
This is also called the "saddle" in some countries.

[Drive method]
Components for power conversion, such as ball screw and timing belt, which are used to drive the movable part of the shaft body.

[Max. speed]
The maximum speed (mm/s) which the axis can attain under specified conditions (load weight, etc.).

[Max. load capacity]
Maximum load capacity (kg) under specified conditions (acceleration/deceleration time, speed, rigidity, service life, etc.).

[Allowable moment of load]
Allowable force (moment) in N·m (kg·m) which acts on the movable part (slider) of the axis. It comes in two types: static and dynamic.

[Position repeatability]
Repeatability of positioning operations obtained under the same conditions using the same direction. The difference between the maximum and minimum values of the result is calculated, then the "±" sign is attached to half of the difference.

[Resolution]
Minimum travel distance of an axis, which can be set during actuator teaching.

[Acceleration/deceleration time (ta)]
The time (seconds) spent until the movable part of the axis accelerates and reaches its set speed, or the time (seconds) spent until it decelerates from its set speed and stops.
This factor is used as a condition for determining the max. load capacity and tact time.
Normally, this value can be specified in a program.

[Lead]
The distance proceeding one rotation of the ball screw.
Displayed as ball screw conversion lead with belt type.

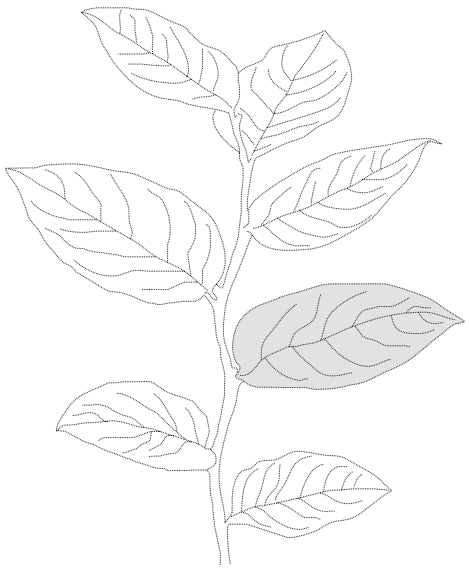

Controller related terminology

[Sequential mode]
Mode in which a program is executed in the order of steps.

[Palletizing mode]
A mode in which traveling and loading operations (palletizing) can be executed easily by specifying points to move, the number of points, etc. The following motions are available:
a. From a given point to another point on a matrix (1 to M)
b. From a point on a matrix to a given point (M to 1)
c. From a point on a matrix to another point on another matrix (M to M)

[External point designation mode]
A mode in which only positioning operations are executed by specifying a PLC connected to inputs and digital switches, without using normal controller commands. Coordinates, speed and acceleration of specified points should be set in the table registered in the controller beforehand.

[Continuous mode]
A mode in which each step of a program is executed continuously in either the sequential or palletizing mode when the start button on the handy terminal is pressed. (Normally used mode)

[Step mode]
A mode in which each single step of a program is executed and stopped in either the sequential or palletizing mode every time the start button on the handy terminal is pressed. (Program check mode)

[Single operation mode]
A mode in which a program is executed and stopped after an axis travel or I/O command is executed in either the sequential or palletizing mode when the start button on the handy terminal is pressed or the start input is given. (Test run mode, pre-operation check mode)

[Remote teaching]
A method of teaching the actuator to move to a desired position by pressing traveling keys on the handy terminal (remote operation) in the servo ON condition.

[Direct teaching]
A method of teaching the robot arm to move to a desired position by directly moving it to that position by the operator's hand with the actuator in the servo OFF condition.

[MDI (manual data input)]
A method of directly entering desired coordinates through the keyboard (numerical input) according to the display shown on the handy terminal.

Precautions for selecting and using orthogonal actuators
- Position accuracy is determined as the specification value of position repeatability.
  Position repeatability is the value for one direction positioning when the ambient temperature and actuator body temperature are constant.
  Note that error may occur with position repeatability of ± bi-direction positioning and absolute position accuracy.
- Position repeatability is the specification value when using a single axis.
  Position accuracy for combinations is determined as the specification value of position repeatability for each individual axis.

Safety Precautions

Always read this section before use.

When designing equipment using electric actuators, the manufacturer is obligated to ensure that the safety of the mechanism and the electrically controlled system are secured.
It is important to select, use, handle and maintain CKD products appropriately to ensure their safe usage.
Observe warnings and precautions to ensure device safety.
Check that device safety is ensured and a safe device is manufactured.

WARNING

1 This product is designed and manufactured as a general industrial machine part.
It must be handled by an operator having sufficient knowledge and experience in handling.

2 Use the product within specifications range.

This product must be used within its stated specifications. It must not be modified or machined additionally.
This product is intended for use as a device or part for general-purpose industrial machinery. It is not intended for use outdoors (except for outdoor type) or for use under the following conditions or environment.
(Note that this product can be used under the following conditions only when CKD is consulted prior to use and the customer consents to CKD product specifications. The customer must provide safety measures to avoid risks in the event of problems.)

❶ Use for special applications which require the safety, including nuclear energy, railways, aircrafts, marine vessels, vehicles, medicinal devices, devices or applications coming into contact with beverages or foodstuffs, amusement devices, emergency operations (cutoff circuits, opening etc.) circuits, press machines, brake circuits, or safety devices or applications.
❷ Use for applications where life or assets could be adversely affected and special safety measures are required.

3 Observe organization standards and regulations, etc. related to the safety of device design.

4 Never remove devices before confirming safety.

❶ Inspect and service on the machine and devices after confirming safety of the entire system related to this product.
❷ Note that there may be hot or charged sections even after operation is stopped.
❸ When inspecting or maintaining device, be sure to shut down the power supply of the equipment and the relevant power supply, using caution to avoid electric shock.

5 Observe instruction manual and precautions attached the product surely to prevent accidents.

❶ The product could operate unexpectedly during teaching operation or trial operation. Be especially careful not to touch the actuator. If operating the product from a position where the shaft body cannot be seen, be sure to first confirm that the safety is secured even if the actuator moves.

6 Observe precautions to prevent electric shock.

❶ Do not touch the heat sink, cement friction, or motor inside the controller.
These will heat up, and could cause burns. Wait an appropriate amount of time prior to performing inspections or other tasks.
A high voltage is applied until the electrical load stored in the internal capacitors is discharged after the power is turned OFF.
Do not touch for around three minutes after the power OFF.
❷ Make sure to turn the switch on the controller power supply source OFF, before maintenances and inspections.
There is a danger of high voltage electric shocks.
❸ Do not attach or remove connector, while the power is on. Otherwise, this may cause malfunction, failure, or electric shock.

7 Install an overcurrent protector.

The wiring to the driver should be in accordance with JIS B 9960-1:2019 (IEC 60204-1:2016) Safety of Machinery - Electrical Equipment of Machines - Part 1: General Requirements. Install an overcurrent protector (a circuit breaker or circuit protector for wiring) on the main power, control power, and I/O power.

(Reference: JIS B 9960-1 7.2.1 General description)
If there is a possibility the circuit current may exceed the rated value of the component or the allowable current of the conductor, an overcurrent protection must be provided. The details of the ratings or set values to be selected shall be provided in 7.2.10.

8 Observe precautions below to prevent accidents.

■ The precautions are ranked as "DANGER", "WARNING" and "CAUTION" in this section.

DANGER: When a dangerous situation may occur if handling is mistaken leading to fatal or serious injuries, and when there is a high degree of emergency to a warning.

WARNING: When a dangerous situation may occur if handling is mistaken leading to fatal or serious injuries.

CAUTION: When a dangerous situation may occur if handling is mistaken leading to minor injuries or physical damage.

Note that some items described as "CAUTION" may lead to serious results depending on the situation.
Every item provides important information and must be observed.

Warranty

1 Warranty period

The product specified herein is warranted for one (1) year from the date of delivery to the location specified by the customer.

2 Warranty coverage

If the product specified herein fails for reasons attributable to CKD within the warranty period specified above, CKD will promptly provide a replacement for the faulty product or a part thereof or repair the faulty product at one of CKD's facilities free of charge.
However, following failures are excluded from this warranty:
1) Failure caused by handling or use of the product under conditions and in environments not conforming to those stated in the catalog, the Specifications, or the Instruction Manual.
2) Failure caused by use of the product exceeding its durability (cycles, distance, time, etc.) or caused by consumable parts.
3) Failure not caused by the product.
4) Failure caused by use not intended for the product.
5) Failure caused by modifications/alterations or repairs not carried out by CKD.
6) Failure caused by reasons unforeseen at the level of technology available at the time of delivery.
7) Failure caused by acts of nature and disasters beyond control of CKD.
The warranty stated herein covers only the delivered product itself. Any loss or damage induced by failure of the delivered product is excluded from this warranty.
Note: For details on the durability and consumable parts, contact your nearest CKD sales office.

3 Compatibility confirmation

The customer is responsible for confirming the compatibility of CKD products with the customer's systems, machines and equipment.

4 Range of service

The delivered product price does not include engineer dispatch service fees. Separate fees will be charged in the following cases.
(1) Instruction of installation and adjustment, and presence on test operation
(2) Maintenance and inspection, adjustment, and repair
(3) Technical instructions and technical education (operation, program, wiring method, safety education, etc.)

Precautions for export

Products and related technologies in this catalog
Those of the products and related technologies in this catalog which are subject to US Export Administration Regulations
(EAR) are marked on the product page as "Product subject to the EAR (EAR99) or (EAR99 and 3A991)".
For export or provision of products or related technologies subject to EAR regulations, we request that the US Export Administration Regulations (EAR) be observed appropriately.

Safety precautions for the electric actuator

Warning and Cautions

Always read this section before starting use.
Refer here for the detailed precautions of each series.

This device fulfills the industrial robot specifications provided in Article 36, Item 31 of the Industrial Safety and Health Regulations. Necessary information can be found in the sections on selection, installation, use, periodic inspection, and education in the Technical Guidelines for Safety Standards During Industrial Robot Use, based on Article 28 of the Industrial Safety and Health Act. Carefully read this information before use and be sure to observe it. Also be sure to carefully read the instruction manual before use.

DANGER — Design/selection

1. Do not operate in flammable or explosive environments.

WARNING — Design/selection

1. Use this product in accordance with the specifications range.
2. Install a protective cover in case of possible danger to the operator.
   - If the electric actuator's movable portions pose possible danger to the operator, be sure that the actuator has a structure preventing the operator from entering its operation range or touching the movable portions directly.
   - Do not get close to the robot if you wear a medical device such as pacemaker. Strong magnets used in the robot may cause misoperation of pacemakers and other devices.
3. Take possibility of power source failure into consideration.
   - In case of a failure in the power source, take countermeasures without causing trouble or damage to the operator or equipment.
4. Take the operational status into consideration in emergency stop.
   - Design the structure so that damage from electric actuator operation does not occur to the operator, machine, or equipment during emergency stop, or when the machine stops due to safety devices operating in the event of power failure or other abnormal system conditions.
5. Take the operational status into consideration if the machine is reactivated after emergency stop or abnormal stop.
   - The machine must be designed so that reactivation causes no damage to the operator or equipment.
     If the electric actuator must be reset to the start position, be sure to provide the machine with a safe control device.
6. Install this product in a place that avoids rain, water, or direct sunlight.
7. Do not operate in corrosive environments.
   - Environments such as these may lead to damage or misoperation.
8. Do not operate in places where vibration and impact are common.
9. Do not operate in places with high levels of dust or where it is likely to come in contact with water and oil drops.
10. Do not apply a load to the product that is greater than or equal to the allowable load listed in the materials for selection.

CAUTION — Design/selection

1. Do not hit the trolley table against the stroke end.
2. Specify the maintenance conditions in the equipment instruction manual.
   - Product functions may deteriorate significantly due to usage, working environment, or maintenance. This may result in failure to ensure safety. With correct maintenance, the product functions can be used to the fullest.
3. Read the instruction manual carefully to perform installation and adjustment properly.
4. The product is manufactured in conformity with the related standards. Do not attempt to modify the product.

CAUTION — During Use & maintenance

1. Read the instruction manual carefully before use.
2. In the case of any abnormalities, stop use immediately and contact the CKD sales office nearest you.

CAUTION — Exporting

1. Regarding exports
   - ❶ When incorporated into equipment, be sure to adhere to the standards of that equipment.

MEMO

[KBX Series] Component List per Unit

Single axis (For details, see the pages for each unit and fill in this sheet)

Guide No.	Unit name	Type	Part No.
1	Shaft body	KBX- □□□□-□□□□□□□□-□□	
2	Controller cable	KBX-10-CC-M □□	
3	Controller (Master(Scanner) unit) Option	KCA-25-M □0-□□□C	
4	I/O cable	KCA-10-IC-A □□	
5	Regenerative discharge unit	KCA-ABSU-□000	
6	Handy terminal	KCA-TPH-4C	
7	PC software	KCA-SF-98D	
8	Communication cable (RS-232C)	KCA-PCBL-31	

[Notes on filling this sheet]
* Fill in the necessary numbers and letters in □, together with the required quantities.
* Packing charge, transportation fee, and excise tax shall be quoted separately.
* This component list may not be adequate depending on the user's requirements.

[KBX Series] Component List per Unit

2-axis, 3-axis, and 4-axis (For details, see the pages for each unit and fill in this sheet)

	Guide No. / Unit name	Type	Part No.
1	Shaft body (1st axis)	KBX- □□□□□-□□□□□-□□ □□□□□-□□□□□	
	Shaft body (2nd axis)	KBX- □□□□□-□□□□□-□□ □□□□□-□□□□□	
	Shaft body (3rd axis)	KBX- □□□□□-□□□□□-□□ □□□□□-□□□□□	
	Shaft body (4th axis) R-axis	KBX-00D- □□□□□-□□	
2	Axis combination bracket	KBX □□□□□ -BK- □□□□□□	
		KBX □□□□□ -BK- □□□□□□	
3	Controller cable	KBX-10-CC-M □□□□	
		KBX-10-CC-M □□□□	
		KBX-10-CC-M □□□□	
		KBX-10-CC-M □□□□	
4	CN box	KBA-10-BX- □□□□□□	
		KBA-10-BX- □□□□□□	
		KBA-10-BX- □□□□□□	
5	Flexible tube Flexible duct	KBA-10- □□□□□-□□ □□□□□	
		KBA-10- □□□□□-□□ □□□□□	
		KBA-10- □□□□□-□□ □□□□□	
6	Tube tray Flexible tray	KBA-10-TT □ □□□□□	
7	Cable grip	KBA-10-CG-M2 □	
8	Sleeve cone	KBA-10-SC-A02	
9	Controller (master/scanner)	KCA-25-M □ 0- □□□□□ C	
10	Controller (slave/adapter)	KCA-25-S □ 0- □ XX	
11	Link cable	KCA-10-LC-A □□□□□	
12	I/O cable	KCA-10-IC-A □□□□□	
13	Regenerative discharge unit	KCA-ABSU- □ 000	
14	Handy terminal	KCA-TPH-4C	

[Notes on filling this sheet]

* Fill in the necessary numbers and letters in □, together with the required quantities.
* Packing charge, transportation fee, and excise tax shall be quoted separately.
* This component list may not be adequate depending on the user's requirements.

[KBZ Series] Component List per Unit

Single axis (For details, see the pages for each unit and fill in this sheet)

Guide No.	Unit name	[Single axis]	Part No.	[2-axis, 3-axis]
1	Shaft body	KBZ - □ D - ST - □ □□□ □ - □□		* Contact your nearest CKD office for details.
2	Controller cable	KBZ - CC - M □□		
3	Controller	KCA - 01 - □ 05		
Option 4	Regenerative discharge unit	KCA - CAR - UN50		
Option 5	Regenerative discharge resistance	KCA - CAR - 0500		
Option 6	Handy terminal	KCA - TPH - 4C		
Option 7	PC software	KCA - SF - 98D		
Option 8	Communication cable (RS-232C)	KCA - PCBL - 31		
Option 9	I/O cable	KCA - 01 - IC - A □□		
Option 10	Cable grip	KBA - 10 - CG - M22 * With motor cover KBZ-□ D-ST- □ □□□ □-□□-M		
Option 11	Resolver ABS backup battery	KCA - 10 - EB - 05		

MEMO

Related products

Electric actuator EBS-M/G, EBR-M/G Series

Catalog No. CC-1422A

■ Slider EBS-M/G Series
High speed transport

■ Rod with built-in guide EBR-M/G Series
For press fitting and hoisting

■ Controller ECR Series
Connected to any actuator"One controller"

■ Easily manage controller ECG Series
Simple inventory management, simple design, simple configuration "New controller"

Electric actuator FLSH/FLCR/FGRC Series

Catalog No. CC-1444A

■ 2-finger Gripper FLSH Series
For soft handling of various workpieces

■ Table FLCR Series
For short-stroke workpiece transport and positioning

■ Rotary FGRC Series
For indexing operation and workpiece inversion

■ Controller ECR Series
"One controller" that connects to any actuator

■ Controller ECG Series
Simple inventory management, simple design, simple configuration "New controller"

Electric Actuator Motorless General Catalog

Catalog No. CB-055A

Wide-ranging lineup of motorless electric actuators

■ Slider

For high speed transport	EBS-L Series
For high load transport	ETS/ECS Series
For long stroke transport	ETV/ECV Series
For fast tact transport	EKS-L Series

■ Rod

For press fitting and hoisting	EBR-L Series

■ ABSODEX
AX1000/2000/4000TS, TH
AX6000MU Series
AX7000XS Series

●The Direct Drive Actuator is designed to be user-friendlyFrom palm-sized to large torques. Conveyance, positioning, and simple construction of various devices

■ τ DISC Series

●The Direct Drive Servo Motor boasting high performance.
A diverse lineup to meet various requirements such as high precision, high speed and speed stability. Achieves one level higher performance.

NIKKI DENSO

Electric shuttle mover ESM Series

Catalog No. CC-1259A

■ Two-dimensional transport system with one motor

●2D transport can be performed with one motor, for efficient use of space
●Long stroke high speed transport up to 20 m, impossible with a single-axis electric actuator, is available
●Multipoint positioning, soft start and stop as desired
●Mount a servo motor you're familiar with

WORLD-NETWORK

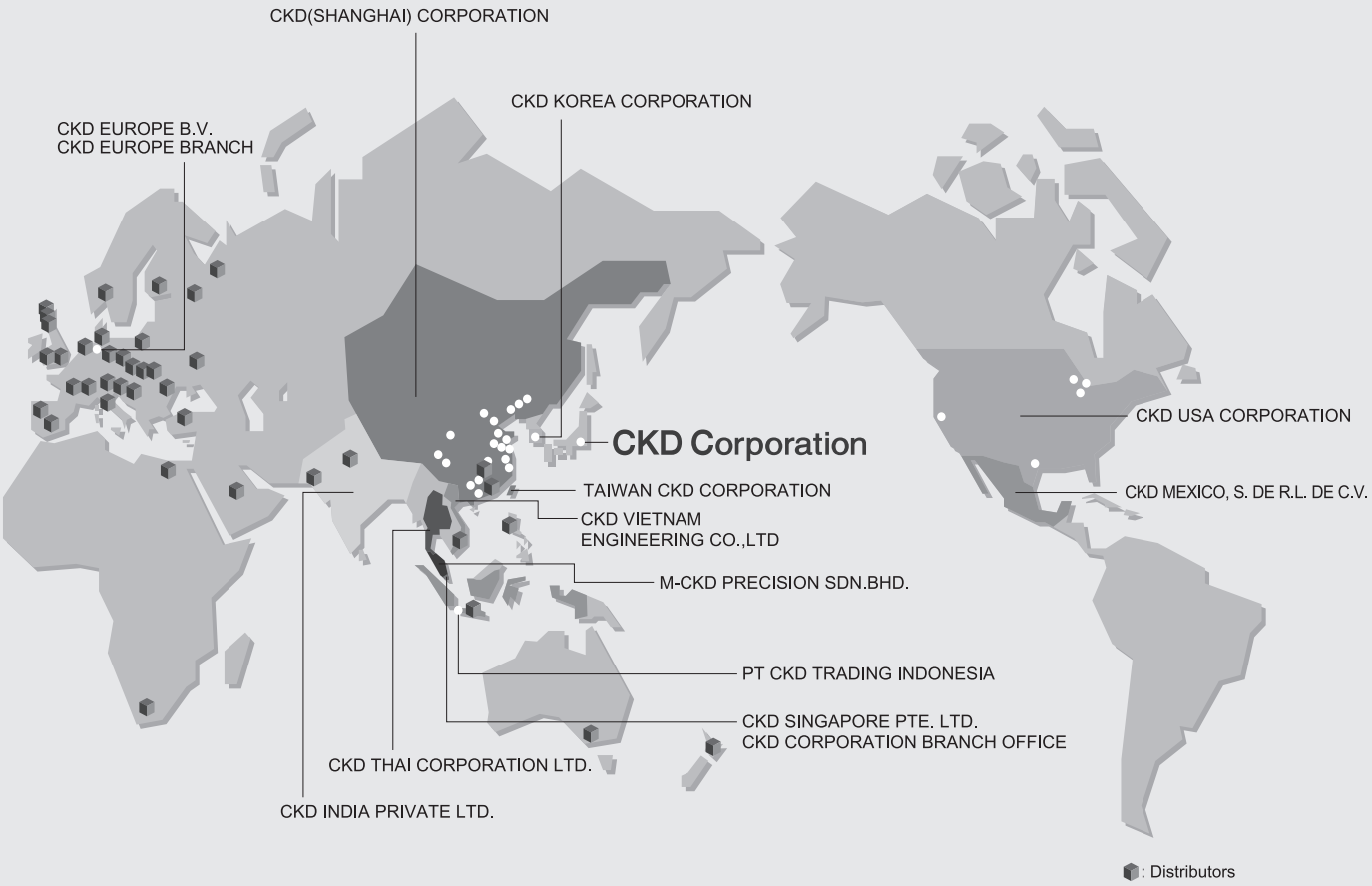

CKD Corporation

Website https://www.ckd.co.jp/en/

□ 2-250 Ouji, Komaki City, Aichi 485-8551, Japan
□ PHONE +81-568-74-1338 FAX +81-568-77-3461

ASIA

喜開理(上海)機器有限公司
CKD(SHANGHAI)CORPORATION
- ●営業部/上海浦西事務所(SALES HEADQUARTERS / SHANGHAI PUXI OFFICE)
  Room 601, 6th Floor, Yuanzhongkeyan Building, No. 1905 Hongmei Road, Xinhui District, Shanghai 200233, China
  PHONE +86-21-61911888 FAX +86-21-60905356
- 上海浦東事務所(SHANGHAI PUDONG OFFICE)
- 寧波事務所(NINGBO OFFICE)
- 杭州事務所(HANGZHOU OFFICE)
- 無錫事務所(WUXI OFFICE)
- 昆山事務所(KUNSHAN OFFICE)
- 蘇州事務所(SUZHOU OFFICE)
- 南京事務所(NANJING OFFICE)
- 合肥事務所(HEFEI OFFICE)
- 成都事務所(CHENGDU OFFICE)
- 武漢事務所(WUHAN OFFICE)
- 鄭州事務所(ZHENGZHOU OFFICE)
- 長沙事務所(CHANGSHA OFFICE)
- 重慶事務所(CHONGQING OFFICE)
- 西安事務所(XIAN OFFICE)
- 広州事務所(GUANGZHOU OFFICE)
- 中山事務所(ZHONGSHAN OFFICE)
- 深圳西事務所(WEST SHENZHEN OFFICE)
- 深圳東事務所(EAST SHENZHEN OFFICE)
- 東莞事務所(DONGGUAN OFFICE)
- 厦門事務所(XIAMEN OFFICE)
- 福州事務所(FUZHOU OFFICE)
- 瀋陽事務所(SHENYANG OFFICE)
- 大連事務所(DALIAN OFFICE)
- 長春事務所(CHANGCHUN OFFICE)
- 北京事務所(BEIJING OFFICE)
- 天津事務所(TIANJIN OFFICE)
- 青島事務所(QINGDAO OFFICE)
- 潍坊事務所(WEIFANG OFFICE)
- 済南事務所(JINAN OFFICE)
- 烟台事務所(YANTAI OFFICE)

CKD INDIA PRIVATE LTD.
- ●HEADQUARTERS
  Unit No. 607, 6th Floor, Welldone Tech Park, Sector 48, Sohna Road, Gurgaon-122018, Haryana, India
  PHONE +91-124-418-8212
- BANGALORE OFFICE
- PUNE OFFICE

PT CKD TRADING INDONESIA
- ●HEAD OFFICE
  Menara Bidakara 2, 18th Floor, Jl. Jend. Gatot Subroto Kav. 71-73, Pancoran, Jakarta 12870, Indonesia
  PHONE +62-21-2938-6601 FAX +62-21-2906-9470
- MEDAN OFFICE
- BEKASI OFFICE
- KARAWANG OFFICE
- SEMARANG OFFICE
- SURABAYA OFFICE

CKD KOREA CORPORATION
- ●HEADQUARTERS
  (3rd Floor), 44, Sinsu-ro, Mapo-gu, Seoul 04088, Korea
  PHONE +82-2-783-5201～5203 FAX +82-2-783-5204
- 水原営業所(SUWON OFFICE)
- 天安営業所(CHEONAN OFFICE)
- 蔚山営業所(ULSAN OFFICE)

M-CKD PRECISION SDN.BHD.
- ●HEAD OFFICE
  Lot No.6,Jalan Modal 23/2, Seksyen 23, Kawasan MIEL, Fasa 8, 40300 Shah Alam,Selangor Darul Ehsan, Malaysia
  PHONE +60-3-5541-1468 FAX +60-3-5541-1533
- JOHOR BAHRU BRANCH OFFICE
- PENANG BRANCH OFFICE

CKD SINGAPORE PTE. LTD.
No.33 Tannery Lane #04-01 Hoesteel Industrial Building, Singapore 347789, Singapore
PHONE +65-67442623 FAX +65-67442486

CKD CORPORATION BRANCH OFFICE
No.33 Tannery Lane #04-01 Hoesteel Industrial Building, Singapore 347789, Singapore
PHONE +65-67447260 FAX +65-68421022

CKD THAI CORPORATION LTD.
- ●HEADQUARTERS
  19th Floor, Smooth Life Tower, 44 North Sathorn Road, Silom, Bangrak, Bangkok 10500, Thailand
  PHONE +66-2-267-6300 FAX +66-2-267-6304-5
- NAVANAKORN OFFICE
- EASTERN SEABOARD OFFICE
- LAMPHUN OFFICE
- KORAT OFFICE
- AMATANAKORN OFFICE
- PRACHINBURI OFFICE
- SARABURI OFFICE

台湾喜開理股份有限公司
TAIWAN CKD CORPORATION
- ●HEADQUARTERS
  16F-3, No. 7, Sec. 3, New Taipei Blvd., Xinzhuang Dist., New Taipei City 242, Taiwan
  PHONE +886-2-8522-8198 FAX +886-2-8522-8128
- 新竹営業所(HSINCHU OFFICE)
- 台中営業所(TAICHUNG OFFICE)
- 台南営業所(TAINAN OFFICE)
- 高雄営業所(KAOHSIUNG OFFICE)

CKD VIETNAM ENGINEERING CO.,LTD.
- ●HEADQUARTERS
  18th Floor, CMC Tower, Duy Tan Street, Cau Giay District, Hanoi, Vietnam
  PHONE +84-24-3795-7631 FAX +84-24-3795-7637
- HO CHI MINH OFFICE

EUROPE

CKD EUROPE B.V.
- ●HEADQUARTERS
  Beechavenue 125A, 1119 RB Schiphol-Rijk, the Netherlands
  PHONE +31-23-554-1490
- CKD EUROPE GERMANY OFFICE
- CKD EUROPE UK
- CKD EUROPE CZECH O.Z.

CKD CORPORATION EUROPE BRANCH
Beechavenue 125A, 1119 RB Schiphol-Rijk, the Netherlands
PHONE +31-23-554-1490

NORTH AMERICA & LATIN AMERICA

CKD MEXICO, S. DE R.L. DE C.V.
Cerrada la Noria No. 200 Int. A-01, Querétaro Park II, Parque Industrial Querétaro, Santa Rosa Jáuregui, Querétaro, C.P. 76220, México
PHONE +52-442-161-0624

CKD USA CORPORATION
- ●HEADQUARTERS
  1605 Penny Lane, Schaumburg, IL 60173, USA
  PHONE +1-847-648-4400 FAX +1-847-565-4923
- LEXINGTON OFFICE
- SAN ANTONIO OFFICE
- SAN JOSE OFFICE/ TECHNICAL CENTER
- DETROIT OFFICE
- BOSTON OFFICE

The goods and/or their replicas, the technology and/or software found in this catalog are subject to complementary export regulations by Foreign Exchange and Foreign Trade Law of Japan.
If the goods and/or their replicas, the technology and/or software found in this catalog are to be exported from Japan, Japanese laws require the exporter makes sure that they will never be used for the development and/or manufacture of weapons for mass destruction.

●Specifications are subject to change without notice.

2022.12