Electric Actuator EJSG Series
Slider Type

CONTENTS

Product Introduction		2
■ Slider Type	EJSG	9
■ Slider Type Dust-proof Specification	EJSG-G	47
■ Slider Type Low Dust Emission Specification	EJSG-C	67
⚠ Precautions for Use		96
Model Selection Checklist		98

For safe use in various environments and processes

We have prepared five lineups that pursue Ease of Use and High Rigidity

Line-up		Size 04	Size 05	Size 08	Catalog Page
Actuator	EJSG	●	●	●	9
	Dust-proof EJSG-G	●	●	●	47
	Low dust specification EJSG-C	●	●	●	67
	Compatible with rechargeable battery manufacturing processes EJSG-P4	●	●	●	CC-1569AA
	Supports food manufacturing processes EJSG-FP1	●	●	●	CC-1569AA
Applicable controller	ECMG	●	●	●	535
	ECG-A	●	●	●	565

Compact, high-rigidity body

High rigidity | Space saving | Reduced design | Reduced parts | Reduced man-hours

The guide that supports the load uses an outer rail. The wide guide integrated with the body achieves both high rigidity and space saving.

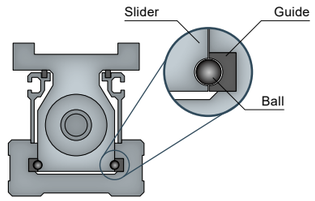

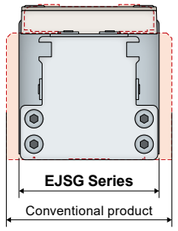

		Conventional Product	EJSG-05
Body Width		64 mm	54 mm
Static Allowable Moment	MP	25.7 N·m	103 N·m
	MY	25.7 N·m	103 N·m
	MR	58 N·m	144 N·m

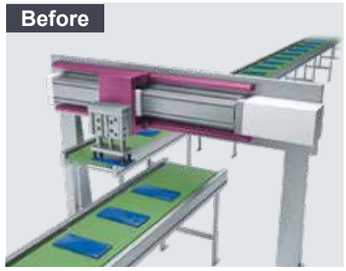

Use of an additional guide to reduce moment

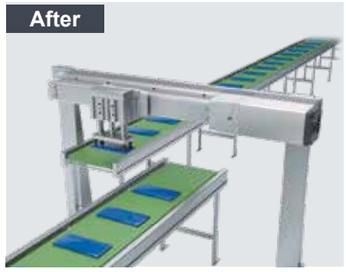

The high-rigidity body supports the moment, so the number of additional guides can be reduced

Battery-less Absolute Encoder

Easy maintenance | Reduced parts

Equipped with an absolute encoder that retains current position information. Because it is a battery-less specification, battery replacement maintenance is not required.

* Option for all series

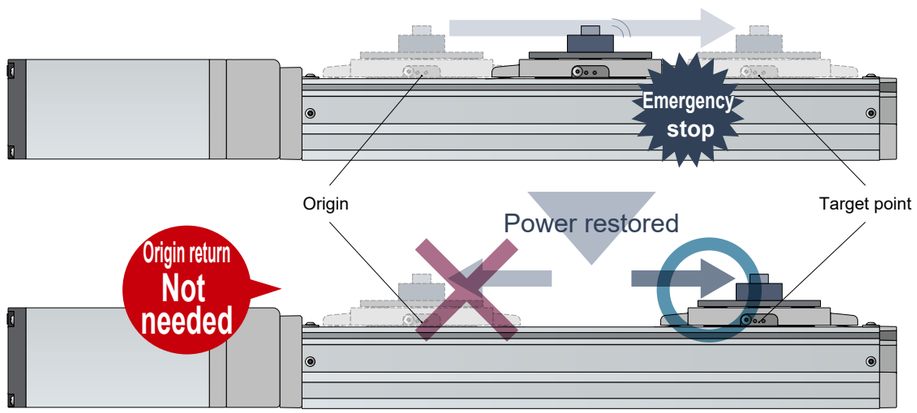

Mounting holes provided on top and bottom surfaces

Reduced man-hours

The structure allows for direct installation from both the top and bottom surfaces without disassembling the product. Especially when installing from the top surface, work time can be significantly reduced.

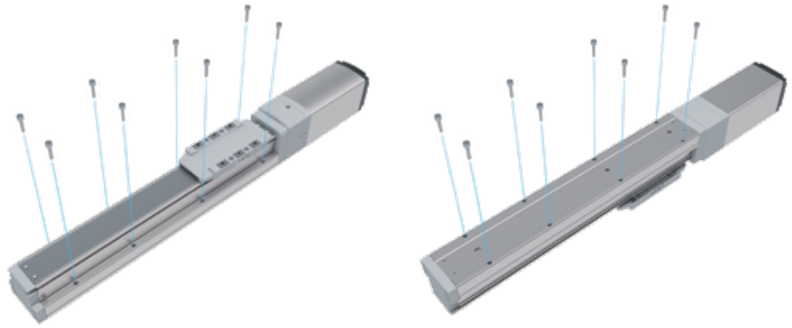

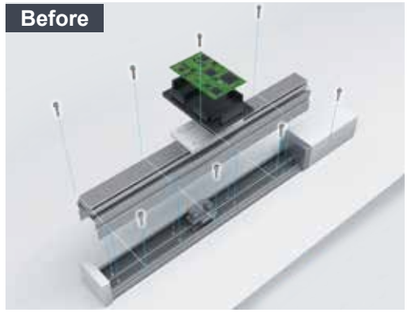

Disassemble main body for top mounting

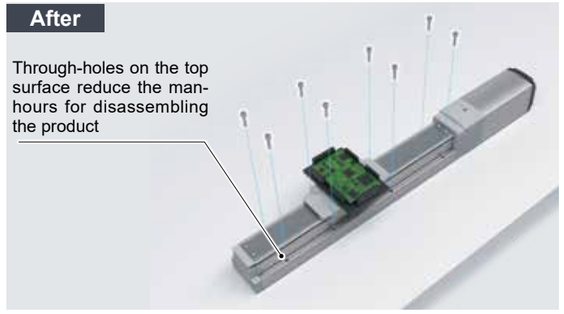

Top mounting without disassembling main body

Equipped with external grease fitting port

Easy maintenance
Reduced man-hours

Equipped with grease fitting ports on both sides for direct greasing from the outside. Maintenance of the guide and ball screw is possible by greasing from one location without disassembling the main body.

Remove jig, disassemble main body, and apply grease

Direct greasing from the outside

Motor unit is replaceable

Easy maintenance

The motor unit can be replaced. Maintenance is easy.

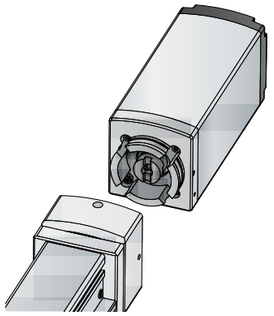

Supports custom-made actuators

High versatility

Please consult with us if you have issues with the dimensions of the actuator section, etc.

* This is a special order product.

Intermediate stroke *Every 10 mm

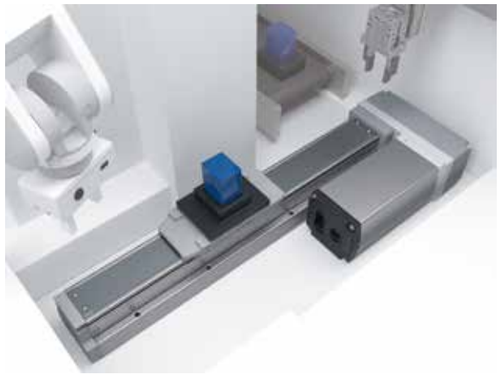

For use in limited spaces

Change of machined hole position

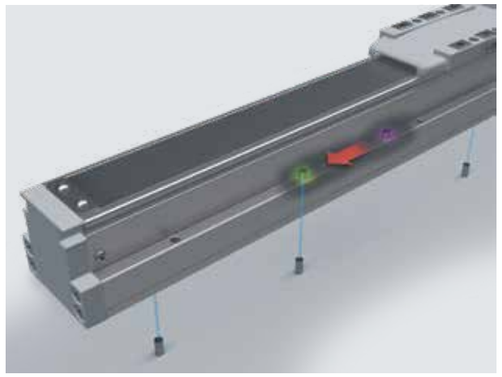

When you want to change the positioning pin hole position

Change of grease

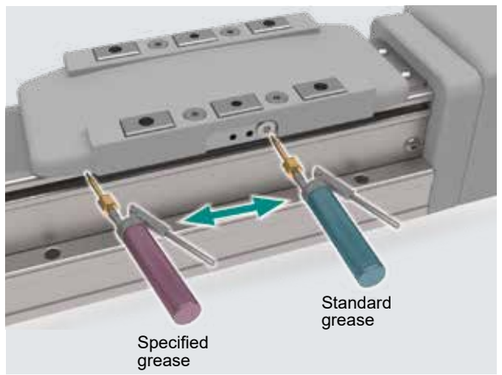

When you want to change to a specified grease

* There are restrictions on the types of grease that can be changed.

Change of fitting position

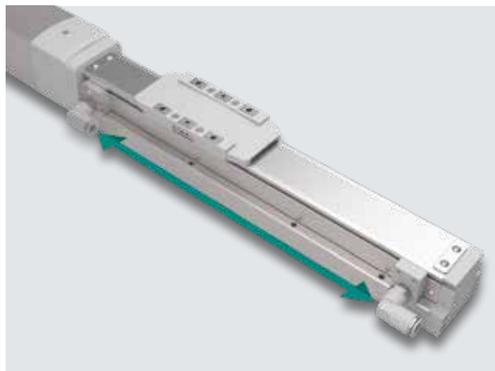

When you want to change the fitting position

Long-life electric actuator in dusty environments

EJSG-G Series (Dust-proof Specification)

Dusty environments

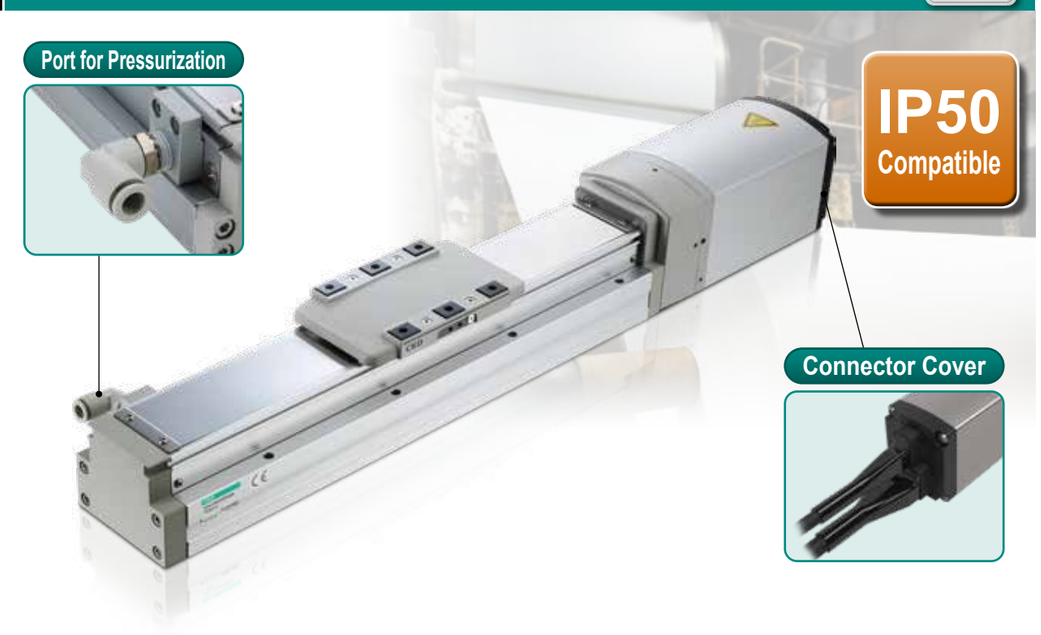

Long service life

Improved durability in dusty environments

Complies with protection structure IP50. Durability in dusty environments has been significantly improved compared to the standard product.

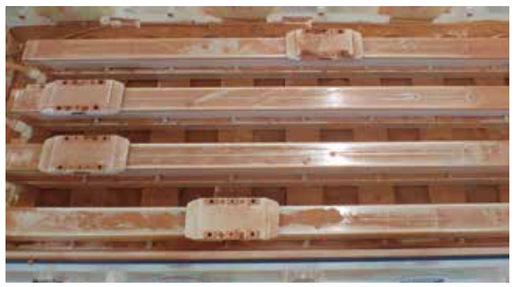

Travel test in a dusty environment

2x Standard Products

Travel Distance

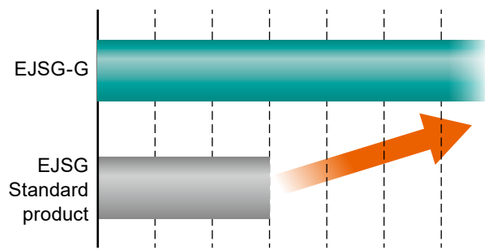

[Test Conditions]

Item		Content
Test Sample	Model No.	EJSG-05E100600NBN-VCN00-G
	Speed	400 mm/s
	Acceleration/ Deceleration	0.6 G
	Purge Flow Rate	40 NL/min
Environment	Dust Material	Kanto loam (7 types)
	Dust Diameter	75 μm
	Amount of Airborne Dust	2 kg/m³

Optimal electric actuator for clean environments

EJSG-C Series (Low Dust Emission Specification)

Low dust environments

Optimal electric actuator for rechargeable battery production processes

EJSG-P4 Series

Rechargeable battery manufacturing
Material restrictions
Dry environment DEW POINT -70°C

Optimal electric actuator for food production processes

EJSG-FP1 Series

Food manufacturing

FP Food Process™

EJSG

Slider Type

Electric Actuator with Motor Specification

CONTENTS

Product Introduction 2
System Table 10
●Specifications, Model No. Notation, External Dimension Drawings
· EJSG-04-□ 16
· EJSG-05-□ 26
· EJSG-08-□ 36
●Model Selection 87
●Technical Data 87
⚠Precautions for Use 96
Model Selection Check Sheet 98

EJSG Series

System Table

Controller	Actuator Model No.		Motor Size	Motor Mounting Direction	Body Width (mm)	Screw Lead (mm)	Max. Payload (kg) Horizontal	Max. Payload (kg) Vertical	Max. Pushing Force (N)	Stroke (mm) and Max. Speed (mm/s) 50 mm	100	150	200	250	300	350	400	450	500	550	600	650	700	750	800	850	900	950	1,000	1050	1100	Page
ECMG Series		EJSG-04E06	□35	Straight	44	6	20.0	9.2	155	450 mm/s									400	340	290	250	220	190	170							16
		EJSG-04E12				12	15.0	3.3	77	900									800	680	580	500	440	390	340							
		EJSG-04R/D/L06		Reverse Parallel		6	20.0	9.2	155	375										340	290	250	220	190	170							20
		EJSG-04R/D/L12				12	15.0	3.3	77	600											580	500	440	390	340							
		EJSG-05E05	□42	Straight	54	5	40.0	14.2	220	375									360	300	260	225	200	175	150							26
		EJSG-05E10				10	27.5	7.1	110	750									720	615	525	455	400	355	315							
		EJSG-05E20				20	18.3	2.5	55	1120											1050	910	800	710	630							
		EJSG-05R/D/L05		Reverse Parallel		5	40.0	10.0	220	350										300	260	225	220	175	150							30
		EJSG-05R/D/L10				10	27.5	3.3	110	635										615	525	455	400	355	315							
		EJSG-05R/D/L20				20	18.3	0.8	55	1120											1050	910	800	710	630							
		EJSG-08E05	□56	Straight	82	5	80.0	43.3	965	230														220	200	175	160	145	130	120	110	36
		EJSG-08E10				10	70.0	28.3	482	430															400	355	320	290	260	240	220	
		EJSG-08E20				20	30.0	3.3	241	800																710	640	580	530	480	440	
		EJSG-08R/D/L05		Reverse Parallel		5	80.0	33.3	965	200																175	160	145	130	120	110	40
		EJSG-08R/D/L10				10	70.0	21.7	482	430															400	355	320	290	260	240	220	
		EJSG-08R/D/L20				20	30.0	3.3	241	800																710	640	580	530	480	440	

* This data is for an acceleration of 0.3 G.
* For wall mounting, the payload is the same as for horizontal installation.

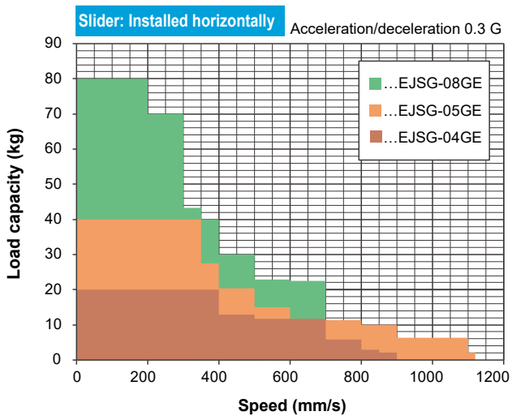

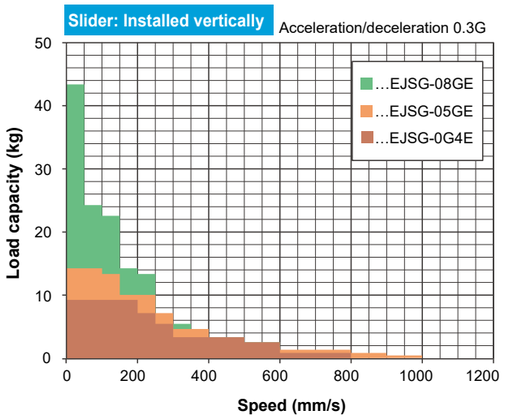

EJSG Series

System Table

Controller	Actuator Model No.		Motor Size	Motor Mounting Direction	Body Width (mm)	Screw Lead (mm)	Max. Payload (kg) Horizontal	Max. Payload (kg) Vertical	Max. Pushing Force (N)	Stroke (mm) and Max. Speed (mm/s)	Page
ECG Series		EJSG-04E06	□35	Straight	44	6	20.0	9.2	155	320 mm/s; 290; 250; 220; 190; 170	16
		EJSG-04E12				12	15.0	3.3	77	500; 440; 390; 340	
		EJSG-04R/D/L06		Reverse Parallel		6	20.0	9.2	155	250; 220; 190; 170	20
		EJSG-04R/D/L12				12	11.7	3.3	77	400; 390; 340	
		EJSG-05E05	□42	Straight	54	5	40.0	14.0	220	290; 260; 225; 200; 175; 150	26
		EJSG-05E10				10	27.5	7.0	110	500; 455; 400; 355; 315	
		EJSG-05E20				20	18.3	2.5	55	850; 800; 710; 630	
		EJSG-05R/D/L05		Reverse Parallel		5	40.0	10.0	220	250; 225; 200; 175; 150	30
		EJSG-05R/D/L10				10	27.5	3.3	110	400; 355; 315	
		EJSG-05R/D/L20				20	18.3	0.8	55	700; 630	
		EJSG-08E05	□56	Straight	82	5	80.0	43.3	965	150; 145; 130; 120; 110	36
		EJSG-08E10				10	70.0	28.3	482	250; 240; 220	
		EJSG-08E20				20	30.0	3.3	241	500; 480; 440	
		EJSG-08R/D/L05		Reverse Parallel		5	80.0	33.3	965	125; 120; 110	40
		EJSG-08R/D/L10				10	70.0	18.3	482	250; 240; 220	
		EJSG-08R/D/L20				20	30.0	3.3	241	400	

Stroke (mm) and Max. Speed (mm/s): 50 mm, 100, 150, 200, 250, 300, 350, 400, 450, 500, 550, 600, 650, 700, 750, 800, 850, 900, 950, 1,000, 1050, 1100

* This data is for an acceleration of 0.3 G.
* For wall mounting, the payload is the same as for horizontal installation.

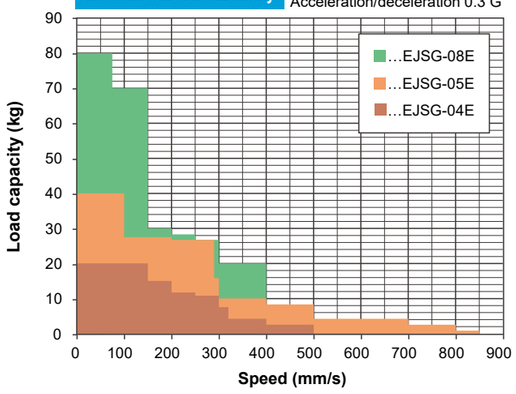

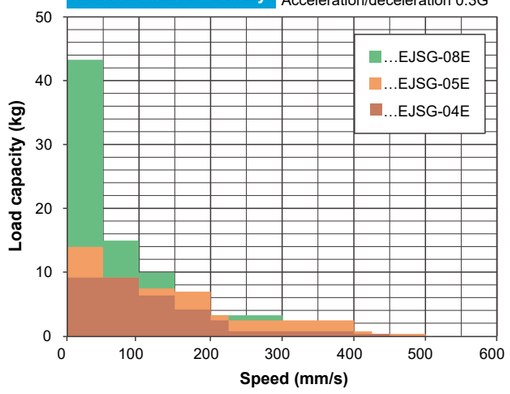

Model No. Configuration

Slider Type

EJSG - 05 E 10 0100 N B N - C S03

❶ ❷ ❸ ❹ ❺ ❻ ❼

Applicable Controller
ECMG Series
ECG Series

❶Body Size	
04	Body width 44 mm
05	Body width 54 mm
08	Body width 82 mm

❷Motor Mounting Direction	
E	Inline Mount
R	Right Side Return Mount
D	Bottom Side Return Mount
L	Left-Side Reverse Parallel Mount

❸Screw Lead	
05	5 mm
06	6 mm
10	10 mm
12	12 mm
20	20 mm

❹Stroke	
0050 to 1100	50 mm (every 50 mm) 1100 mm

❺Brake	
N	None
B	Yes

❻Encoder	
B	Battery-less Absolute Encoder
C	Incremental Encoder

❼Relay Cable	
N00	None
S01	Fixed cable 1 m
S03	Fixed cable 3 m
S05	Fixed cable 5 m
S10	Fixed cable 10 m
R01	Flexible cable 1 m
R03	Flexible cable 3 m
R05	Flexible cable 3 m
R10	Flexible cable 3 m

Dust-proof Specification (G Series)

EJSG - 05 E 10 0100 N B N - V C S03 - G

❶ ❷ ❸ ❹ ❺ ❻ ❽ ❼

Applicable Controller
ECMG Series
ECG Series

❽Fitting	
V	Yes

Dust-proof Specification

Low Dust Emission Specification (C Series)

EJSG - 05 E 10 0100 N B N - V C S03 - C

❶ ❷ ❸ ❹ ❺ ❻ ❽ ❼

Applicable Controller
ECMG Series
ECG Series

❽Fitting	
V	Yes

Low Dust Emission Specification

MEMO

Slider Type
EJSG
EBS

Electric Actuator Slider Type

EJSG-04E

Inline Motor Mount Type

□35 Stepping Motor

For compatible detailed model numbers, please see our website.

Model No. Notation Method

EJSG - 04 E 06 0300 N B N - C S03

❶ ❷ ❸ ❹ ❺ ❻ ❼

Applicable Controller *1
ECMG
ECG

❶Body Size	
04	Body width 44 mm

❷Motor Mounting Direction	
E	Inline Mount

❸Screw Lead	
06	6 mm
12	12 mm

❹Stroke	
0050 to 0800	50 mm (every 50 mm) 800 mm

❺Brake *2	
N	None
B	Yes

❻Encoder	
B	Battery-less Absolute Encoder
C	Incremental Encoder

❼Relay Cable*3	
N00	None
S01	Fixed cable 1 m
S03	Fixed cable 3 m
S05	Fixed cable 5 m
S10	Fixed cable 10 m
R01	Flexible cable 1 m
R03	Flexible cable 3 m
R05	Flexible cable 3 m
R10	Flexible cable 3 m

*1 Select the controller from P. 529.
*2 Select "Yes" for vertical use.
*3 For the external dimension drawing of the relay cable, please refer to P. 576.

EAR-subject item (product incorporating EAR99)

Specifications

Connected Controller		ECMG		ECG	
Motor		□35 Stepping Motor			
Encoder Type		Battery-less Absolute Encoder/Incremental Encoder			
Drive Method		Ball screw ø10			
Stroke mm		50 to 800			
Screw lead mm		6	12	6	12
Max. Payload kg *1	Horizontal	20.0	15.0	20.0	15.0
	Vertical	9.2	3.3	9.2	3.3
Operating Speed Range *2 mm/s		7 to 450	15 to 900	7 to 320	15 to 500
Max. Acceleration/ Deceleration G	Horizontal	1.0		0.7	
	Vertical	0.5		0.3	
Max. Pushing Force N		155	77	155	77
Pushing Operation Speed Range mm/s		5 to 20		5 to 20	
Repeatability mm		±0.01			
Lost Motion mm		0.1 or less			
Static Allowable Moment N·m		MP: 62 MY: 62 MR: 92			
Motor Power Supply Voltage		24 VDC ±10%			
Brake	Type, Power Supply Voltage	Non-excitation operating type, 24 VDC ±10%			
	Power Consumption W	6.1			
	Holding Force N	140	70	140	70
Insulation Resistance		10 MΩ, 500 VDC			
Dielectric Strength		500 VAC for 1 minute			
Operating Ambient Temperature, Humidity		10°C to 40°C (no freezing) 35 to 80% RH (no condensation)			
Storage Ambient Temperature, Humidity		-10°C to 50°C (no freezing) 35 to 80% RH (no condensation)			
Atmosphere		No corrosive gas, explosive gas, or dust			
Protection Structure		IP20			

*1 Payload varies depending on acceleration/deceleration and speed. For details, see P. 17.
*2 Maximum speed may decrease depending on conditions.

Stroke and Max. Speed

Connected Controller ECMG (mm/s)

Screw Lead (mm)	Stroke (mm) 50 to 450	500	550	600	650	700	750	800
6	450	400	340	290	250	220	190	170
12	900	800	680	580	500	440	390	340

Connected Controller ECG (mm/s)

Screw Lead (mm)	Stroke (mm) 50 to 550	600	650	700	750	800
6	320	290	250	220	190	170
12	500			440	390	340

Speed and Payload

[Horizontal Installation]

Connected Controller ECMG (kg)

Speed (mm/s)	Acceleration/Deceleration (G) 0.3		0.5		0.7		1.0	
	Screw Lead (mm) 6	12	6	12	6	12	6	12
7	20.0		20.0		20.0		16.7	
15	20.0	15.0	20.0	15.0	20.0	14.2	16.7	5.4
100	20.0	15.0	20.0	15.0	20.0	14.2	16.7	5.4
150	20.0	15.0	20.0	10.0	18.3	8.3	15.0	5.4
200	20.0	15.0	20.0	10.0	15.0	8.3	14.2	5.4
300	20.0	15.0	20.0	10.0	15.0	8.3	12.1	5.4
350	20.0	15.0	20.0	10.0	13.3	8.3	12.1	5.4
400	20.0	15.0	20.0	10.0	13.3	8.3	9.2	5.4
450	11.7	12.9	11.7	10.0	11.7	8.3	8.3	5.4
500		12.9		10.0		8.3		5.4
600		11.7		9.2		7.5		5.4
700		11.7		8.3		5.8		5.4
800		5.8		5.8		5.8		2.5
850		2.9		2.5		2.5		1.7
900		2.1		1.7		1.7		0.8

[Connected Controller: ECG] (kg)

Speed (mm/s)	Acceleration/Deceleration (G) 0.3		0.7	
	Screw Lead (mm) 6	12	6	12
7	20.0		20.0	
15	20.0	15.0	20.0	15.0
50	20.0	15.0	20.0	15.0
100	20.0	15.0	20.0	15.0
150	20.0	15.0	12.5	10.8
200	15.0	15.0	12.5	10.8
250	11.7	10.8	11.7	8.3
300	7.5	10.8	7.5	8.3
320	7.5	4.2	7.5	4.2
400		4.2		4.2
500		2.5		2.5

[Vertical Installation]

Connected Controller: ECMG (kg)

Speed (mm/s)	Acceleration/Deceleration (G) 0.3		0.5	
	Screw Lead (mm) 6	12	6	12
7	9.2		9.2	
15	9.2	3.3	9.2	3.3
200	9.2	3.3	9.2	3.3
250	7.1	3.3	6.7	3.3
300	5.4	3.3	4.2	3.3
350	2.5	3.3	1.7	3.3
400	1.7	3.3		3.3
500		3.3		3.3
600		2.5		2.5
800		0.8		0.8

Connected Controller ECG] (kg)

Speed (mm/s)	Acceleration/ Deceleration (G) 0.3	
	Screw Lead (mm) 6	12
7	9.2	
15	9.2	3.3
50	9.2	3.3
100	9.2	3.3
150	6.7	3.3
200	4.2	3.3
225	1.7	2.5
250	1.7	2.5
275	0.4	2.5
300		2.5
350		0.8
400		0.8
450		0.4

Pushing Force

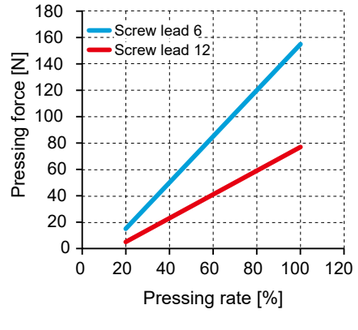

* The pushing force above is a reference value. It may vary depending on conditions such as pushing speed.

EJSG-04E

External Dimension Drawing Inline Motor Mount

● EJSG-04E

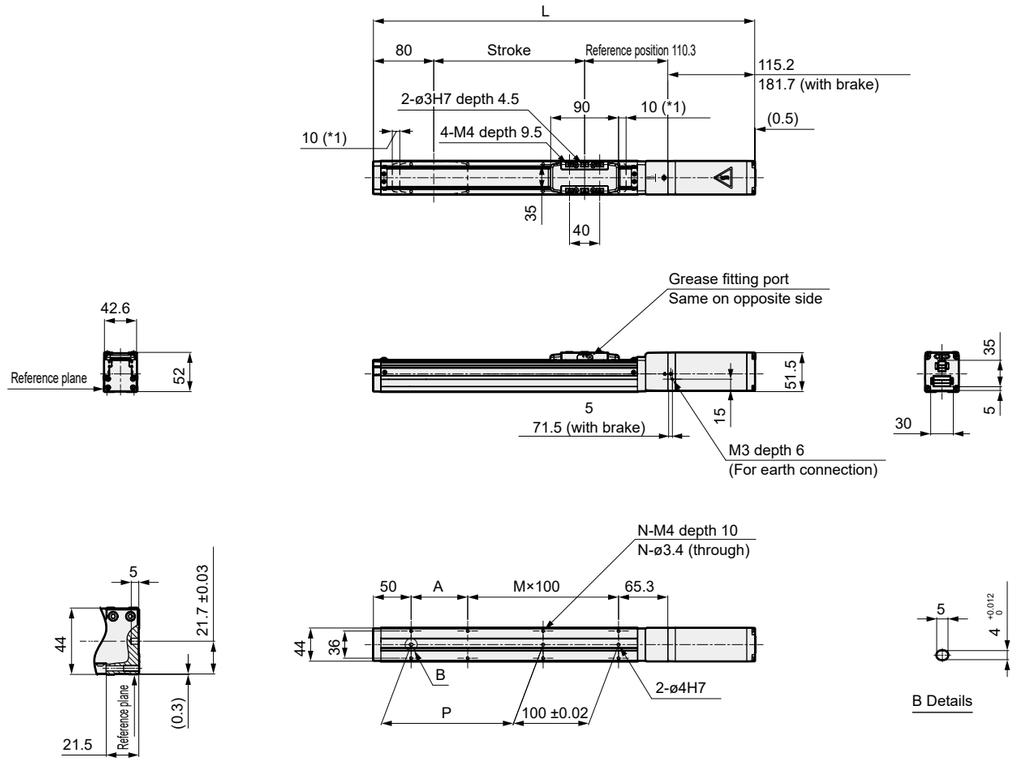

*1: Operating range to the mechanical stopper

Stroke Code		0050	0100	0150	0200	0250	0300	0350	0400	0450	0500	0550	0600	0650	0700	0750	0800
Stroke (mm)		50	100	150	200	250	300	350	400	450	500	550	600	650	700	750	800
L	Without Brake	355.5	405.5	455.5	505.5	555.5	605.5	655.5	705.5	755.5	805.5	855.5	905.5	955.5	1005.5	1055.5	1105.5
	With Brake	422	472	522	572	622	672	722	772	822	872	922	972	1022	1072	1122	1172
A		25	75	25	75	25	75	25	75	25	75	25	75	25	75	25	75
M		1	1	2	2	3	3	4	4	5	5	6	6	7	7	8	8
N		6	6	8	8	10	10	12	12	14	14	16	16	18	18	20	20
P		25	75	125	175	225	275	325	375	425	475	525	575	625	675	725	775
Weight (kg)	Without Brake	1.6	1.7	1.8	1.9	2.0	2.2	2.3	2.4	2.5	2.6	2.8	2.9	3.0	3.1	3.2	3.4
	With Brake	2.0	2.1	2.2	2.3	2.5	2.6	2.7	2.8	2.9	3.1	3.2	3.3	3.4	3.5	3.7	3.8

MEMO

Slider Type
EJSG
EBS
Ending

Electric Actuator Slider Type

EJSG-04□

Reverse Parallel Motor Mount Type

□35 Stepping Motor

For compatible detailed model numbers, please see our website.

Model No. Notation Method

EJSG - 04 R 06 0300 N B N - C S03

❶ ❷ ❸ ❹ ❺ ❻ ❼

Applicable Controller *1
ECMG
ECG

❶Body Size	
04	Body width 44 mm

❷Motor Mounting Direction *2	
R	Right Side Return Mount
D	Bottom Side Return Mount
L	Left-Side Reverse Parallel Mount

❸Screw Lead	
06	6 mm
12	12 mm

❹Stroke *2	
0050 to 0800	50 mm (every 50 mm) 800 mm

❺Brake *3	
N	None
B	Yes

❻Encoder	
B	Battery-less Absolute Encoder
C	Incremental Encoder

❼Relay Cable *4	
N00	None
S01	Fixed cable 1 m
S03	Fixed cable 3 m
S05	Fixed cable 5 m
S10	Fixed cable 10 m
R01	Flexible cable 1 m
R03	Flexible cable 3 m
R05	Flexible cable 3 m
R10	Flexible cable 3 m

*1 Select the controller from P. 529.
*2 When "D" is selected for the motor mounting direction, the stroke can be selected from "0250 (250 mm)" to "0800 (800 mm)".
*3 Select "Yes" for vertical use.
*4 For the external dimension drawing of the relay cable, please refer to P. 576.

EAR-subject item (product incorporating EAR99)

Specifications

Connected Controller		ECMG		ECG	
Motor		□35 Stepping Motor			
Encoder Type		Battery-less Absolute Encoder/Incremental Encoder			
Drive Method		Ball screw ø10			
Stroke mm		50 to 500			
Screw lead mm		6	12	6	12
Max. Payload kg *1	Horizontal	20.0	15.0	20.0	11.7
	Vertical	9.2	3.3	9.2	3.3
Operating Speed Range *2 mm/s		7 to 375	15 to 600	7 to 250	15 to 400
Max. Acceleration/Deceleration G	Horizontal	1.0		0.7	
	Vertical	0.5		0.3	
Max. Pushing Force N		155	77	155	77
Pushing Operation Speed Range mm/s		5 to 20		5 to 20	
Repeatability mm		±0.01			
Lost Motion mm		0.1 or less			
Static Allowable Moment N·m		MP: 62 MY: 62 MR: 92			
Motor Power Supply Voltage		24 VDC ±10%			
Brake	Type, Power Supply Voltage	Non-excitation operating type, 24 VDC ±10%			
	Power Consumption W	6.1			
	Holding Force N	140	70	140	70
Insulation Resistance		10 MΩ, 500 VDC			
Dielectric Strength		500 VAC for 1 minute			
Operating Ambient Temperature, Humidity		10°C to 40°C (no freezing) 35 to 80% RH (no condensation)			
Storage Ambient Temperature, Humidity		-10°C to 50°C (no freezing) 35 to 80% RH (no condensation)			
Atmosphere		No corrosive gas, explosive gas, or dust			
Protection Structure		IP20			

*1 Payload varies depending on acceleration/deceleration and speed. For details, see P. 21.
*2 Maximum speed may decrease depending on conditions.

Stroke and Max. Speed

Connected Controller ECMG (mm/s)

Screw Lead (mm)	Stroke (mm) 50 to 500	550	600	650	700	750	800
6	375	340	290	250	220	190	170
12	600		580	500	440	390	340

Connected Controller ECG (mm/s)

Screw Lead (mm)	Stroke (mm) 50 to 650	700	750	800
6	250	220	190	170
12	400		390	340

Speed and Payload

[Horizontal Installation]

Connected Controller: ECMG (kg)

Speed (mm/s)	Acceleration/Deceleration (G) 0.3		0.5		0.7		1.0	
	Screw lead (mm) 6	12	6	12	6	12	6	12
7	20.0		20.0		20.0		16.7	
15	20.0	15.0	20.0	15.0	20.0	14.2	16.7	5.4
100	20.0	15.0	20.0	15.0	20.0	14.2	16.7	5.4
150	20.0	15.0	20.0	10.0	18.3	8.3	15.0	5.4
200	20.0	15.0	20.0	10.0	15.0	8.3	14.2	5.4
250	20.0	15.0	20.0	10.0	15.0	8.3	12.1	5.4
300	20.0	15.0	20.0	10.0	15.0	8.3	11.7	5.4
350	20.0	15.0	20.0	10.0	13.3	8.3	11.3	5.4
375	15.8	15.0	15.8	10.0	13.3	8.3	9.2	5.4
400		15.0		10.0		8.3		5.4
450		11.7		10.0		8.3		5.4
500		0.8		0.8		0.8		

Connected Controller ECG (kg)

Speed (mm/s)	Acceleration/Deceleration (G) 0.3		0.7	
	Screw Lead (mm) 6	12	6	12
7	20.0		20.0	
15	20.0	11.7	20.0	10.0
50	20.0	11.7	20.0	10.0
100	20.0	11.7	20.0	10.0
150	13.3	11.7	11.7	10.0
200	13.3	11.7	10.0	10.0
250	10.0	8.3	8.3	8.3
300		8.3		8.3
400		3.3		3.3

[Vertical Installation]

[Connected Controller: ECMG (kg)

Speed (mm/s)	Acceleration/Deceleration (G) 0.3		0.5	
	Screw Lead (mm) 6	12	6	12
7	9.2		9.2	
15	9.2	3.3	9.2	3.3
150	9.2	3.3	9.2	3.3
200	8.3	3.3	8.3	3.3
250	5.8	3.3	5.8	3.3
300	4.6	3.3	4.2	3.3
350	2.5	3.3	1.7	3.3
375	0.8	3.3		3.3
450		2.1		2.1
500		0.8		0.8

Connected Controller: ECG (kg)

Speed (mm/s)	Acceleration/Deceleration (G) 0.3	
	Screw Lead (mm) 6	12
7	9.2	
15	9.2	3.3
50	9.2	3.3
100	6.7	3.3
150	3.3	3.3
200	2.5	3.3
225	0.8	1.7
300		1.7
350		0.8

Pushing Force

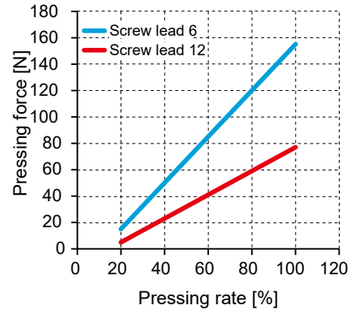

* The pushing force above is a reference value. It may vary depending on conditions such as pushing speed.

External Dimension Drawing Motor Right Side Return Mount

● EJSG-04R

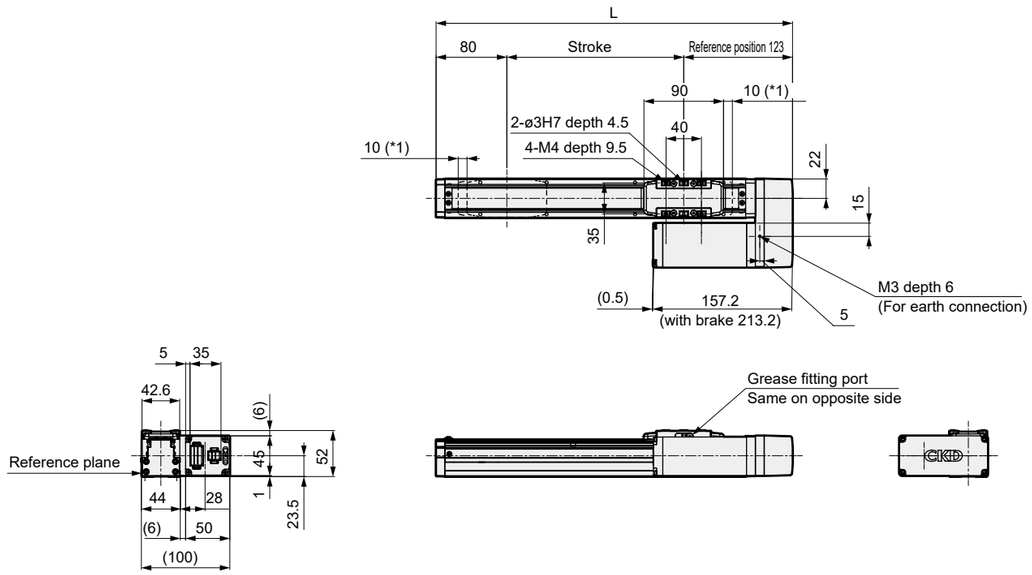

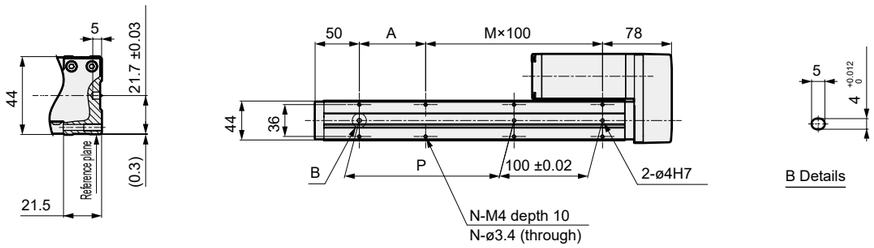

*1: Operating range to the mechanical stopper

Stroke Code		0050	0100	0150	0200	0250	0300	0350	0400	0450	0500	0550	0600	0650	0700	0750	0800
Stroke (mm)		50	100	150	200	250	300	350	400	450	500	550	600	650	700	750	800
L		253	303	353	403	453	503	553	603	653	703	753	803	853	903	953	1003
A		25	75	25	75	25	75	25	75	25	75	25	75	25	75	25	75
M		1	1	2	2	3	3	4	4	5	5	6	6	7	7	8	8
N		6	6	8	8	10	10	12	12	14	14	16	16	18	18	20	20
P		25	75	125	175	225	275	325	375	425	475	525	575	625	675	725	775
Weight (kg)	Without Brake	1.7	1.8	1.9	2.0	2.2	2.3	2.4	2.5	2.6	2.8	2.9	3.0	3.1	3.2	3.4	3.5
	With Brake	2.1	2.2	2.3	2.4	2.6	2.7	2.8	2.9	3.0	3.2	3.3	3.4	3.5	3.6	3.8	3.9

External Dimension Drawing Bottom-Mounted Reverse Parallel Motor Mount

● EJSG-04D

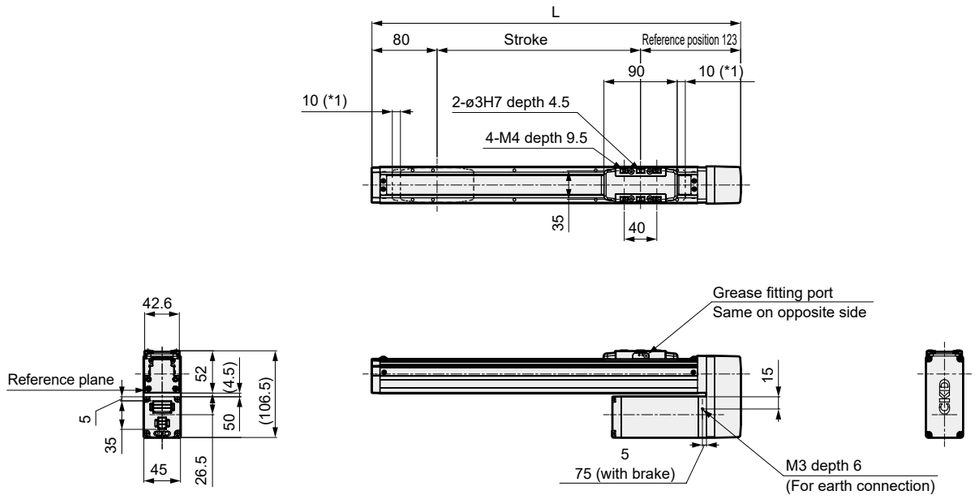

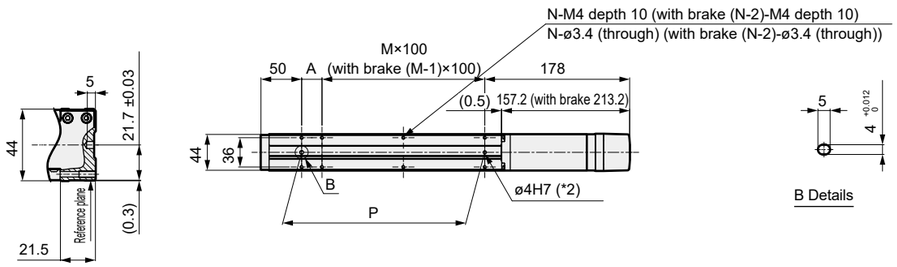

*1: Operating range to the mechanical stopper
*2: When with brake, ø4H7 is hidden by the motor part and cannot be used.

Stroke Code		0250	0300	0350	0400	0450	0500	0550	0600	0650	0700	0750	0800
Stroke (mm)		250	300	350	400	450	500	550	600	650	700	750	800
L		453	503	553	603	653	703	753	803	853	903	953	1003
A		25	75	25	75	25	75	25	75	25	75	25	75
M		2	2	3	3	4	4	6	6	7	7	8	8
N		8	8	10	10	12	12	16	16	18	18	20	20
P		225	275	325	375	425	475	525	575	625	675	725	775
Weight (kg)	Without Brake	2.2	2.3	2.4	2.5	2.6	2.8	2.9	3.0	3.1	3.2	3.4	3.5
	With Brake	2.6	2.7	2.8	2.9	3.0	3.2	3.3	3.4	3.5	3.6	3.8	3.9

External Dimension Drawing Left-Side Reverse Parallel Motor Mount

● EJSG-04L

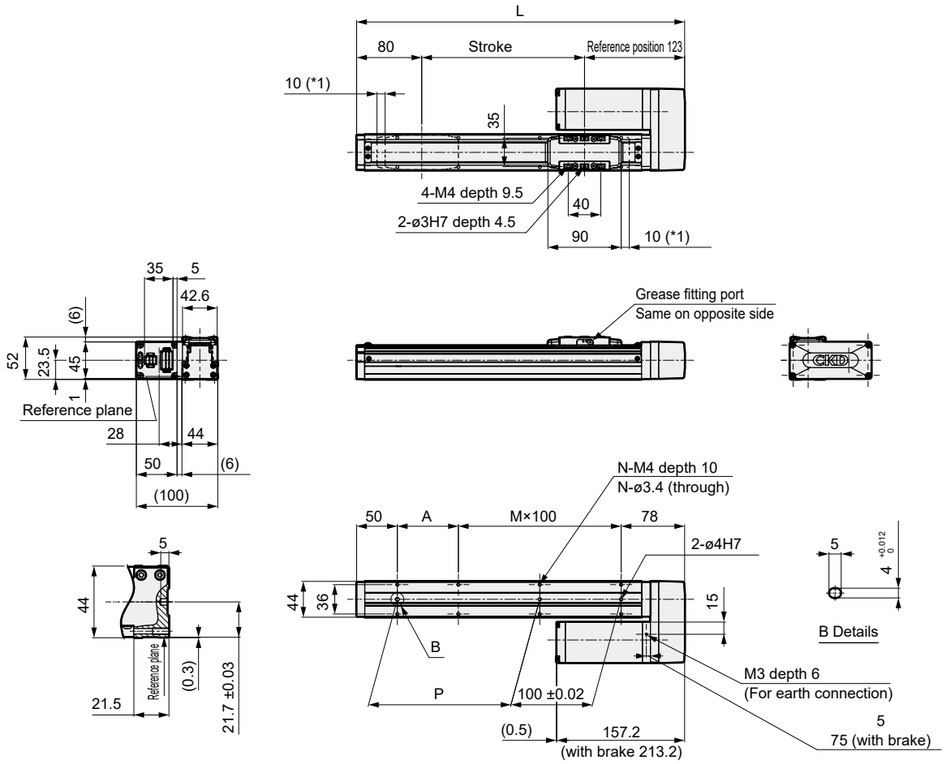

*1: Operating range to the mechanical stopper

Stroke Code		0050	0100	0150	0200	0250	0300	0350	0400	0450	0500	0550	0600	0650	0700	0750	0800
Stroke (mm)		50	100	150	200	250	300	350	400	450	500	550	600	650	700	750	800
L		253	303	353	403	453	503	553	603	653	703	753	803	853	903	953	1003
A		25	75	25	75	25	75	25	75	25	75	25	75	25	75	25	75
M		1	1	2	2	3	3	4	4	5	5	6	6	7	7	8	8
N		6	6	8	8	10	10	12	12	14	14	16	16	18	18	20	20
P		25	75	125	175	225	275	325	375	425	475	525	575	625	675	725	775
Weight (kg)	Without Brake	1.7	1.8	1.9	2.0	2.2	2.3	2.4	2.5	2.6	2.8	2.9	3.0	3.1	3.2	3.4	3.5
	With Brake	2.1	2.2	2.3	2.4	2.6	2.7	2.8	2.9	3.0	3.2	3.3	3.4	3.5	3.6	3.8	3.9

MEMO

Electric Actuator Slider Type

EJSG-05E

Inline Motor Mount Type

□42 Stepping Motor

For compatible detailed model numbers, please see our website.

Model No. Notation Method

EJSG - 05 E 05 0300 N B N - C S03

❶ ❷ ❸ ❹ ❺ ❻ ❼

Applicable Controller *1
ECMG
ECG

❶Body Size	
05	Body width 54 mm

❷Motor Mounting Direction	
E	Inline Mount

❸Screw Lead	
05	5 mm
10	10 mm
20	20 mm

❹Stroke	
0050 to 0800	50 mm (every 50 mm) 800 mm

❺Brake *2	
N	None
B	Yes

❻Encoder	
B	Battery-less Absolute Encoder
C	Incremental Encoder

❼Relay Cable *3	
N00	None
S01	Fixed cable 1 m
S03	Fixed cable 3 m
S05	Fixed cable 5 m
S10	Fixed cable 10 m
R01	Flexible cable 1 m
R03	Flexible cable 3 m
R05	Flexible cable 3 m
R10	Flexible cable 3 m

*1 Select the controller from P. 529.
*2 Select "Yes" for vertical use.
*3 For the external dimension drawing of the relay cable, please refer to P. 576.

EAR-subject item (product incorporating EAR99)

Specifications

Connected Controller		ECMG			ECG		
Motor		□42 Stepping Motor					
Encoder Type		Battery-less Absolute Encoder/Incremental Encoder					
Drive Method		Ball screw ø12					
Stroke mm		50 to 800					
Screw lead mm		5	10	20	5	10	20
Max. Payload kg *1	Horizontal	40.0	27.5	18.3	40.0	27.5	18.3
	Vertical	14.2	7.1	2.5	14.0	7.0	2.5
Operating Speed Range *3 mm/s		6 to 375	12 to 750	25 to 1120	6 to 290	12 to 500	25 to 850
Max. Acceleration/ Deceleration G	Horizontal	1.0			0.7		
	Vertical	0.5			0.3		
Max. Pushing Force N		220	110	55	220	110	55
Pushing Operation Speed Range mm/s		5 to 20			5 to 20		
Repeatability mm		±0.01					
Lost Motion mm		0.1 or less					
Static Allowable Moment N·m		MP: 103 MY: 103 MR: 144					
Motor Power Supply Voltage		24 VDC ±10%					
Brake	Type, Power Supply Voltage	Non-excitation operating type, 24 VDC ±10%					
	Power Consumption W	6.1					
	Holding Force N	168	84	42	168	84	42
Insulation Resistance		10 MΩ, 500 VDC					
Dielectric Strength		500 VAC for 1 minute					
Operating Ambient Temperature, Humidity		10°C to 40°C (no freezing) 35 to 80% RH (no condensation)					
Storage Ambient Temperature, Humidity		-10°C to 50°C (no freezing) 35 to 80% RH (no condensation)					
Atmosphere		No corrosive gas, explosive gas, or dust					
Protection Structure		IP20					

*1 Payload varies depending on acceleration/deceleration and speed. For details, see P. 27.
*2 Maximum speed may decrease depending on conditions.

Stroke and Max. Speed

Connected Controller ECMG (mm/s)

Screw Lead (mm)	Stroke (mm)							
	50 to 450	500	550	600	650	700	750	800
5	375	360	300	260	225	200	175	150
10	750	720	615	525	455	400	355	315
20	1120			1050	910	800	710	630

Connected Controller ECG (mm/s)

Screw Lead (mm)	Stroke (mm)					
	50 to 550	600	650	700	750	800
5	290	260	225	200	175	150
10	500		455	400	355	315
20	850			800	710	630

Speed and Payload

[Horizontal Installation]

[Connected Controller: ECMG (kg)

Speed (mm/s)	Acceleration/Deceleration (G) 0.3			0.5			0.7			1.0		
	Screw lead (mm) 5	10	20	5	10	20	5	10	20	5	10	20
6	40.0			40.0			40.0			40.0		
12	40.0	27.5		40.0	25.0		40.0	23.3		40.0	22.9	
25	40.0	27.5	18.3	40.0	25.0	11.7	40.0	23.3	10.0	40.0	22.9	8.3
100	40.0	27.5	18.3	40.0	25.0	11.7	40.0	23.3	10.0	40.0	22.9	8.3
200	40.0	27.5	18.3	40.0	25.0	11.7	40.0	18.3	10.0	30.4	14.2	6.7
250	40.0	27.5	15.0	40.0	25.0	11.7	33.3	18.3	8.3	20.4	12.9	6.3
300	40.0	27.5	15.0	40.0	25.0	11.7	24.2	18.3	8.3	13.8	12.9	6.3
350	40.0	27.5	15.0	35.8	25.0	11.7	24.2	18.3	8.3	9.2	12.9	6.3
375	20.0	27.5	15.0	20.0	25.0	11.7	20.0	18.3	8.3	7.9	12.9	6.3
400		27.5	15.0		25.0	11.7		18.3	8.3		12.9	6.3
500		20.4	13.3		20.4	10.0		18.3	8.3		10.8	6.3
600		15.0	13.3		15.0	10.0		15.0	8.3		6.3	6.3
700		6.7	11.3		6.7	8.3		6.7	6.7		3.3	5.0
750		2.9	11.3		2.9	7.5		2.9	6.7		2.9	4.2
800			11.3			7.5			6.7			4.2
900			10.0			7.5			6.7			4.2
1,000			6.3			6.3			5.0			2.9
1100			6.3			4.2			2.5			1.7
1120			2.1			2.1			2.1			1.7

[Connected Controller: ECG (kg)

Speed (mm/s)	Acceleration/Deceleration (G) 0.3			0.7		
	Screw lead (mm) 5	10	20	5	10	20
6	40.0			40.0		
12	40.0	27.5		40.0	27.5	
25	40.0	27.5	18.3	40.0	27.5	8.3
50	40.0	27.5	18.3	40.0	27.5	8.3
100	40.0	27.5	18.3	40.0	27.5	8.3
150	26.7	27.5	10.0	26.7	27.5	6.7
200	26.7	27.5	10.0	26.7	27.5	6.7
250	26.7	15.8	10.0	26.7	12.5	6.7
290	26.7	15.8	10.0	15.8	12.5	6.7
300		15.8	10.0		12.5	6.7
400		10.0	8.3		9.2	5.0
500		5.8	8.3		2.5	5.0
700			4.2			2.5
800			2.5			1.7
850			0.8			0.4

[Vertical Installation]

[Connected Controller: ECMG (kg)

Speed (mm/s)	Acceleration/Deceleration (G) 0.3			0.5		
	Screw Lead (mm) 5	10	20	5	10	20
6	14.2			14.2		
12	14.2	7.1		14.2	7.1	
25	14.2	7.1	2.5	14.2	7.1	2.5
100	14.2	7.1	2.5	14.2	7.1	2.5
150	13.3	7.1	2.5	13.3	7.1	2.5
250	10.0	7.1	2.5	10.0	7.1	2.5
300	6.3	7.1	2.5	6.3	7.1	2.5
350	2.9	4.6	2.5	2.9	3.8	2.5
375	1.3	4.6	2.5	1.3	3.8	2.5
400		4.6	2.5		3.8	2.5
500		2.5	1.3		1.7	1.3
600		1.7	1.3		0.8	1.3
650		0.8	1.3			1.3
800			1.3			1.3
900			0.8			0.8
1,000			0.4			

Connected Controller: ECG (kg)

Speed (mm/s)	Acceleration/ Deceleration (G) 0.3		
	Screw lead (mm) 5	10	20
6	14.0		
12	14.0	7.0	
25	14.0	7.0	2.5
50	14.0	7.0	2.5
100	9.2	7.0	2.5
150	7.5	7.0	2.5
200	4.2	7.0	2.5
210	3.3	2.5	2.5
225	3.3	2.5	2.5
250	2.1	2.5	2.5
300		2.5	2.5
325		2.1	2.5
350		2.1	2.5
400		1.3	2.5
425		0.8	0.4
500			0.4

Pushing Force

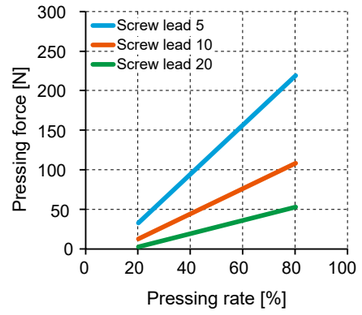

* The pushing force above is a reference value. It may vary depending on conditions such as pushing speed.

EJSG-05E

External Dimension Drawing Inline Motor Mount

● EJSG-05E

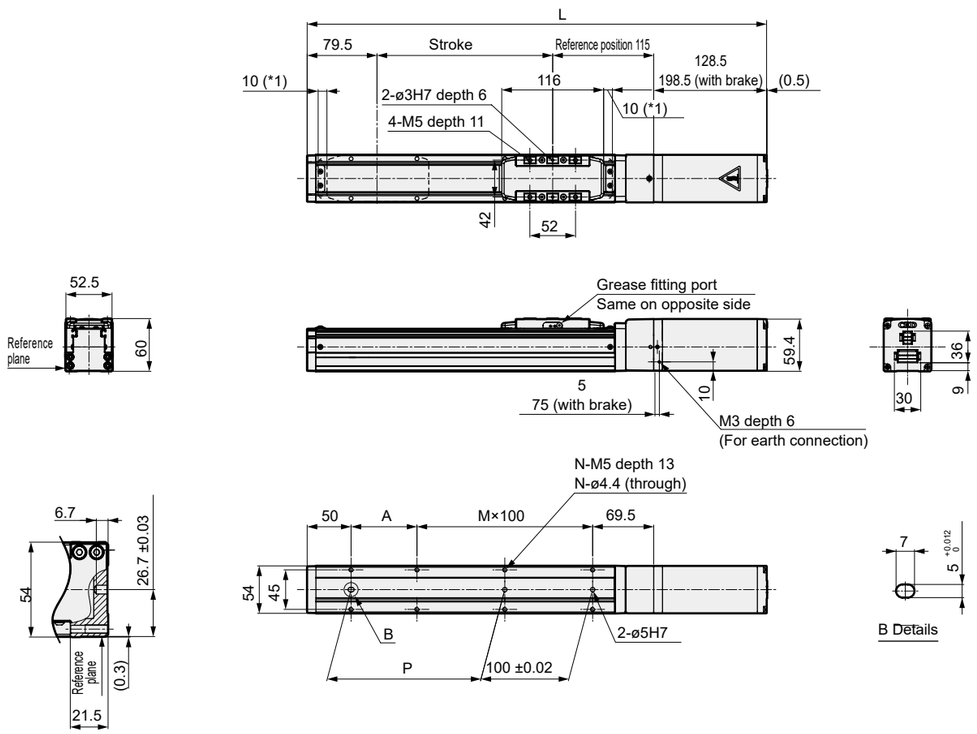

*1: Operating range to the mechanical stopper

Stroke Code		0050	0100	0150	0200	0250	0300	0350	0400	0450	0500	0550	0600	0650	0700	0750	0800
Stroke (mm)		50	100	150	200	250	300	350	400	450	500	550	600	650	700	750	800
L	Without Brake	373	423	473	523	573	623	673	723	773	823	873	923	973	1023	1073	1123
	With Brake	443	493	543	593	643	693	743	793	843	893	943	993	1043	1093	1143	1193
A		25	75	25	75	25	75	25	75	25	75	25	75	25	75	25	75
M		1	1	2	2	3	3	4	4	5	5	6	6	7	7	8	8
N		6	6	8	8	10	10	12	12	14	14	16	16	18	18	20	20
P		25	75	125	175	225	275	325	375	425	475	525	575	625	675	725	775
Weight (kg)	Without Brake	2.4	2.6	2.7	2.8	3.0	3.1	3.3	3.4	3.5	3.7	3.8	4.0	4.1	4.2	4.4	4.5
	With Brake	3.2	3.3	3.5	3.6	3.7	3.9	4.0	4.2	4.3	4.4	4.6	4.7	4.9	5.0	5.1	5.3

MEMO

Slider Type
EJSG
EBS
Ending

Electric Actuator Slider Type

EJSG-05□

Reverse Parallel Motor Mount Type

□42 Stepping Motor

For compatible detailed model numbers, please see our website.

Model No. Notation Method

EJSG - 05 R 05 0300 N B N - C S03

❶ ❷ ❸ ❹ ❺ ❻ ❼

Applicable Controller *1
ECMG
ECG

❶Body Size	
05	Body width 54 mm

❷Motor Mounting Direction *2	
R	Right Side Return Mount
D	Bottom Side Return Mount
L	Left-Side Reverse Parallel Mount

❸Screw Lead	
05	5 mm
10	10 mm
20	20 mm

❹Stroke *2	
0050 to 0800	50 mm (every 50 mm) 800 mm

❺Brake *3	
N	None
B	Yes

❻Encoder	
B	Battery-less Absolute Encoder
C	Incremental Encoder

❼Relay Cable *4	
N00	None
S01	Fixed cable 1 m
S03	Fixed cable 3 m
S05	Fixed cable 5 m
S10	Fixed cable 10 m
R01	Flexible cable 1 m
R03	Flexible cable 3 m
R05	Flexible cable 3 m
R10	Flexible cable 3 m

*1 Select the controller from P. 529.
*2 When "D" is selected for the motor mounting direction, the stroke can be selected from "0250 (250 mm)" to "0800 (800 mm)".
*3 Select "Yes" for vertical use.
*4 For the external dimension drawing of the relay cable, please refer to P. 576.

EAR-subject item (product incorporating EAR99)

Specifications

Connected Controller		ECMG			ECG		
Motor		□42 Stepping Motor					
Encoder Type		Battery-less Absolute Encoder/Incremental Encoder					
Drive Method		Ball screw ø12					
Stroke mm		50 to 800					
Screw lead mm		5	10	20	5	10	20
Max. Payload kg *1	Horizontal	40.0	27.5	18.3	40.0	27.5	18.3
	Vertical	10.0	3.3	0.8	10.0	3.3	0.8
Operating Speed Range *2 mm/s		6 to 325	12 to 635	25 to 1120	6 to 250	12 to 400	25 to 700
Max. Acceleration/ Deceleration G	Horizontal	1.0			0.7		
	Vertical	0.5			0.3		
Max. Pushing Force N		220	110	55	220	110	55
Pushing Operation Speed Range mm/s		5 to 20					
Repeatability mm		±0.01					
Lost Motion mm		0.1 or less					
Static Allowable Moment N·m		MP: 103 MY: 103 MR: 144					
Motor Power Supply Voltage		24 VDC ±10%					
Brake	Type, Power Supply Voltage	Non-excitation operating type, 24 VDC ±10%					
	Power Consumption W	6.1					
	Holding Force N	168	84	42	168	84	42
Insulation Resistance		10 MΩ, 500 VDC					
Dielectric Strength		500 VAC for 1 minute					
Operating Ambient Temperature, Humidity		10°C to 40°C (no freezing) 35 to 80% RH (no condensation)					
Storage Ambient Temperature, Humidity		-10°C to 50°C (no freezing) 35 to 80% RH (no condensation)					
Atmosphere		No corrosive gas, explosive gas, or dust					
Protection Structure		IP20					

*1 Payload varies depending on acceleration/deceleration and speed. For details, see P. 31.
*2 Maximum speed may decrease depending on conditions.

Stroke and Max. Speed

[Connected Controller ECMG] (mm/s)

Screw Lead (mm)	Stroke (mm)						
	50 to 450	550	600	650	700	750	800
5	350	300	260	225	200	175	150
10	635	615	525	455	400	355	315
20	1120		1050	910	800	710	630

[Connected Controller ECG] (mm/s)

Screw Lead (mm)	Stroke (mm)				
	50 to 600	650	700	750	800
5	250	225	200	175	150
10	400			355	315
20	700				630

Speed and Payload

[Horizontal Installation]

[Connected Controller: ECMG] (kg)

Speed (mm/s)	Acceleration/Deceleration (G) 0.3			0.5			0.7			1.0		
	Screw lead (mm) 5	10	20	5	10	20	5	10	20	5	10	20
6	40.0			40.0			40.0			40.0		
12	40.0	27.5		40.0	25.0		40.0	23.3		40.0	22.9	
25	40.0	27.5	18.3	40.0	25.0	11.7	40.0	23.3	10.0	40.0	22.9	8.3
100	40.0	27.5	18.3	40.0	25.0	11.7	40.0	23.3	10.0	40.0	22.9	8.3
150	40.0	27.5	15.0	40.0	20.0	11.7	40.0	18.3	10.0	23.3	14.2	6.7
200	40.0	27.5	15.0	40.0	20.0	11.7	32.5	18.3	10.0	18.3	14.2	6.7
250	40.0	27.5	15.0	40.0	20.0	11.7	25.8	18.3	8.3	13.3	12.9	6.3
300	19.2	27.5	15.0	19.2	20.0	11.7	19.2	18.3	8.3		12.9	6.3
325	19.2	27.5	15.0	19.2	20.0	11.7	16.7	18.3	8.3		12.9	6.3
400		27.5	15.0		20.0	11.7		18.3	8.3		12.9	6.3
500		20.4	13.3		17.5	10.0		15.0	8.3		10.8	6.3
600		15.0	13.3		13.3	10.0		13.3	8.3		6.3	6.3
635		4.6	11.3		4.6	8.3		4.6	6.7		3.3	5.0
700			11.3			8.3			6.7			5.0
800			11.3			7.5			6.7			4.2
900			10.0			7.5			6.7			4.2
1,000			6.3			6.3			5.0			2.5
1100			6.3			4.2			2.5			1.7
1120			1.3			1.3			1.3			

[Connected Controller: ECG] (kg)

Speed (mm/s)	Acceleration/Deceleration (G) 0.3			0.7		
	Screw lead (mm) 5	10	20	5	10	20
6	40.0			40.0		
12	40.0	27.5		40.0	27.5	
25	40.0	27.5	18.3	40.0	27.5	7.5
50	40.0	27.5	18.3	40.0	27.5	7.5
100	40.0	27.5	18.3	40.0	27.5	7.5
150	26.7	23.3	10.0	26.7	20.0	5.0
200	26.7	23.3	10.0	26.7	20.0	5.0
250	8.3	11.7	10.0	8.3	11.7	5.0
300		11.7	10.0		11.7	5.0
400		3.3	6.7		3.3	4.2
500			6.7			4.2
700			3.3			1.7

[Vertical Installation]

[Connected Controller: ECMG] (kg)

Speed (mm/s)	Acceleration/Deceleration (G) 0.3			0.5		
	Screw Lead (mm) 5	10	20	5	10	20
6	10.0			10.0		
12	10.0	3.3		10.0	3.3	
25	10.0	3.3	0.8	10.0	3.3	0.8
200	10.0	3.3	0.8	10.0	3.3	0.8
250	7.5	3.3	0.8	5.8	3.3	0.8
300	3.8	3.3	0.8	1.7	3.3	0.8
325	0.8	3.3	0.8		2.9	0.8
400		3.3	0.8		2.9	0.8
500		2.5	0.8		1.7	0.8
600		0.8	0.8		0.8	0.8
900			0.8			0.8

[Connected Controller: ECG] (kg)

Speed (mm/s)	Acceleration/ Deceleration (G) 0.3
	Screw lead (mm) 5	10	20
6	10.0		
12	10.0	3.3	
25	10.0	3.3	0.8
50	10.0	3.3	0.8
100	8.3	3.3	0.8
150	6.7	2.1	0.8
200	2.5	2.1	0.8
210	0.8	1.3	0.8
300		1.3	0.8
325		0.4	0.8
400			0.8
500			0.4

Pushing Force

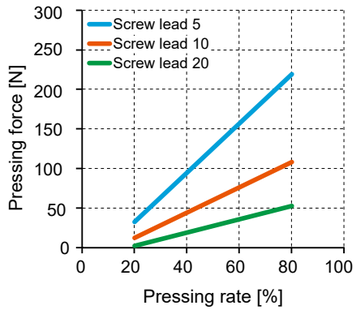

* The pushing force above is a reference value. It may vary depending on conditions such as pushing speed.

External Dimension Drawing Motor Right Side Return Mount

● EJSG-05R

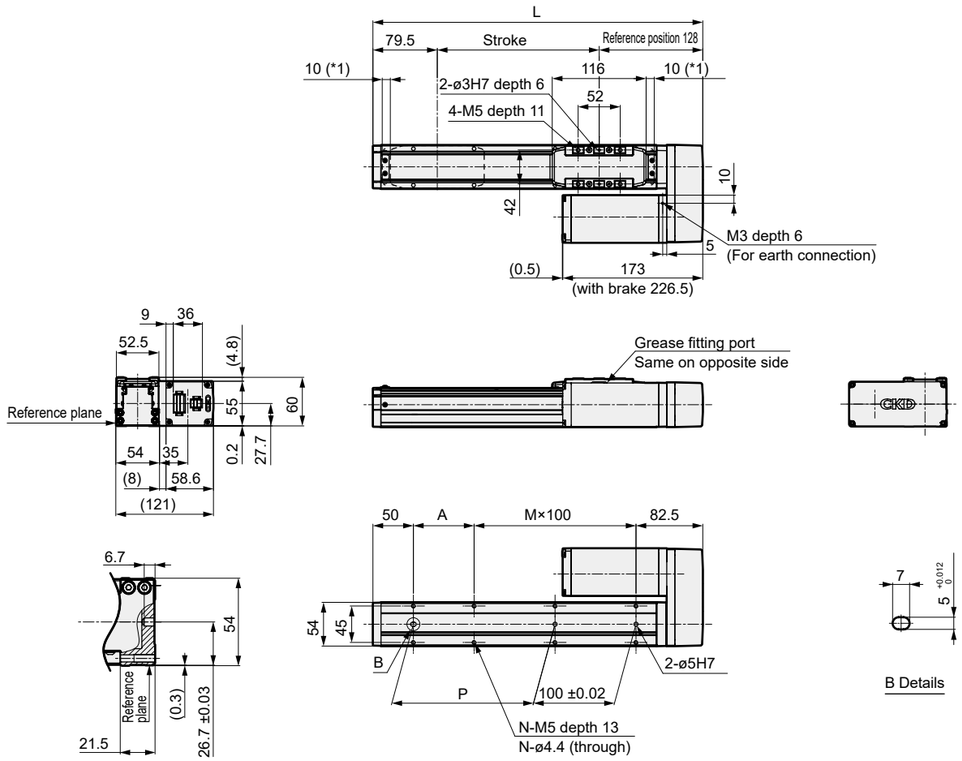

*1: Operating range to the mechanical stopper

Stroke Code		0050	0100	0150	0200	0250	0300	0350	0400	0450	0500	0550	0600	0650	0700	0750	0800
Stroke (mm)		50	100	150	200	250	300	350	400	450	500	550	600	650	700	750	800
L		257.5	307.5	357.5	407.5	457.5	507.5	557.5	607.5	657.5	707.5	757.5	807.5	857.5	907.5	957.5	1007.5
A		25	75	25	75	25	75	25	75	25	75	25	75	25	75	25	75
M		1	1	2	2	3	3	4	4	5	5	6	6	7	7	8	8
N		6	6	8	8	10	10	12	12	14	14	16	16	18	18	20	20
P		25	75	125	175	225	275	325	375	425	475	525	575	625	675	725	775
Weight (kg)	Without Brake	2.6	2.7	2.8	3.0	3.1	3.3	3.4	3.5	3.7	3.8	3.9	4.1	4.2	4.4	4.5	4.6
	With Brake	3.3	3.5	3.6	3.7	3.9	4.0	4.2	4.3	4.4	4.6	4.7	4.9	5.0	5.1	5.3	5.4

External Dimension Drawing Bottom-Mounted Reverse Parallel Motor Mount

● EJSG-05D

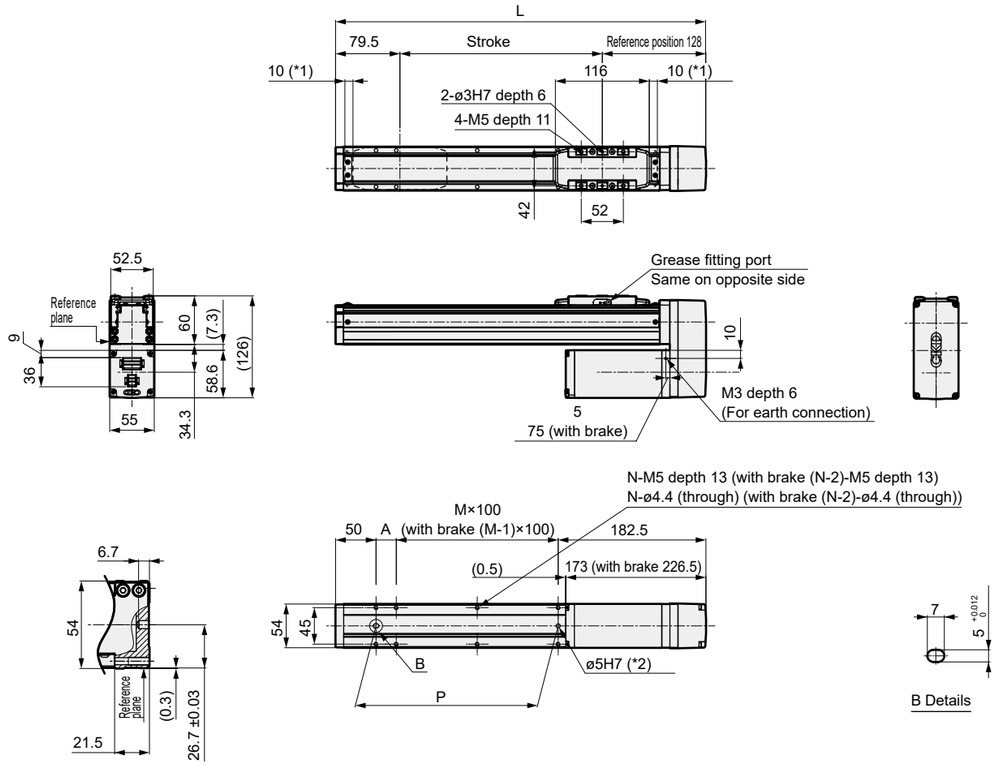

*1: Operating range to the mechanical stopper
*2: When with brake, ø5H7 is hidden by the motor part and cannot be used.

Stroke Code		0250	0300	0350	0400	0450	0500	0550	0600	0650	0700	0750	0800
Stroke (mm)		250	300	350	400	450	500	550	600	650	700	750	800
L		457.5	507.5	557.5	607.5	657.5	707.5	757.5	807.5	857.5	907.5	957.5	1007.5
A		25	75	25	75	25	75	25	75	25	75	25	75
M		2	2	3	3	4	4	5	5	6	6	7	7
N		8	8	10	10	12	12	14	14	16	16	18	18
P		225	275	325	375	425	475	525	575	625	675	725	775
Weight (kg)	Without Brake	3.1	3.3	3.4	3.5	3.7	3.8	3.9	4.1	4.2	4.4	4.5	4.6
	With Brake	3.9	4.0	4.2	4.3	4.4	4.6	4.7	4.9	5.0	5.1	5.3	5.4

External Dimension Drawing Left-Side Reverse Parallel Motor Mount

● EJSG-05L

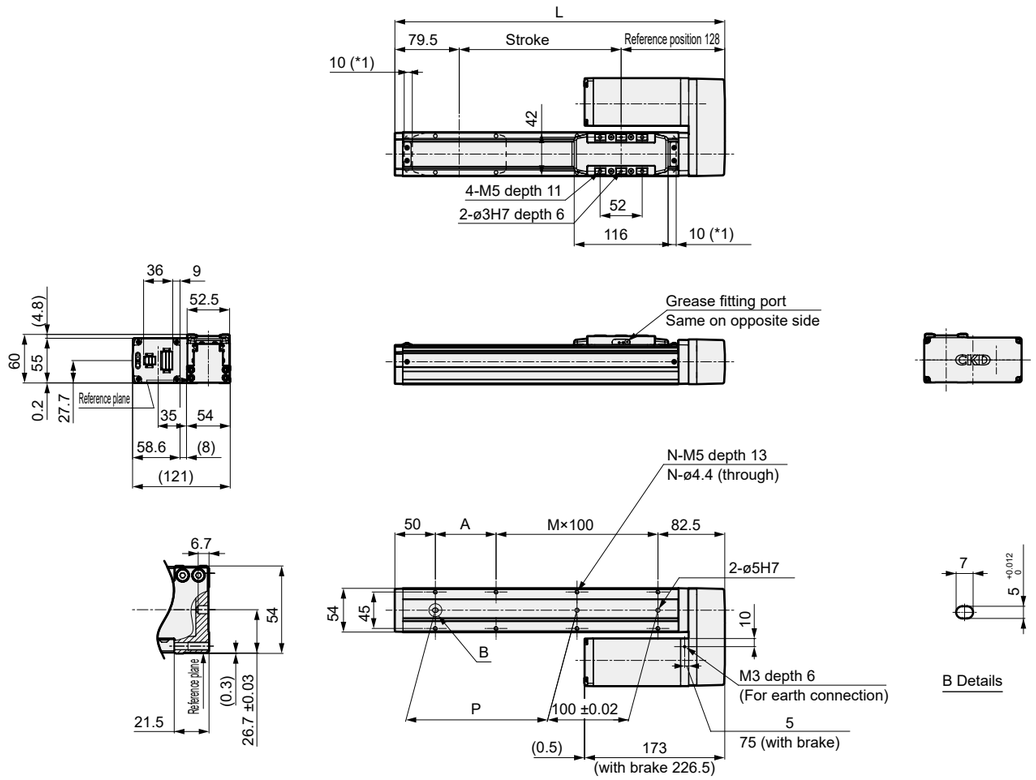

*1: Operating range to the mechanical stopper

Stroke Code		0050	0100	0150	0200	0250	0300	0350	0400	0450	0500	0550	0600	0650	0700	0750	0800
Stroke (mm)		50	100	150	200	250	300	350	400	450	500	550	600	650	700	750	800
L		257.5	307.5	357.5	407.5	457.5	507.5	557.5	607.5	657.5	707.5	757.5	807.5	857.5	907.5	957.5	1007.5
A		25	75	25	75	25	75	25	75	25	75	25	75	25	75	25	75
M		1	1	2	2	3	3	4	4	5	5	6	6	7	7	8	8
N		6	6	8	8	10	10	12	12	14	14	16	16	18	18	20	20
P		25	75	125	175	225	275	325	375	425	475	525	575	625	675	725	775
Weight (kg)	Without Brake	2.6	2.7	2.8	3.0	3.1	3.3	3.4	3.5	3.7	3.8	3.9	4.1	4.2	4.4	4.5	4.6
	With Brake	3.3	3.5	3.6	3.7	3.9	4.0	4.2	4.3	4.4	4.6	4.7	4.9	5.0	5.1	5.3	5.4

MEMO

Electric Actuator Slider Type

EJSG-08E

Inline Motor Mount Type

□56 Stepping Motor

For compatible detailed model numbers, please see our website.

Model No. Notation Method

EJSG - 08 E 05 0300 N B N - C S03

❶ ❷ ❸ ❹ ❺ ❻ ❼

Applicable Controller *1
ECMG
ECG

❶Body Size	
08	Body width 82 mm

❷Motor Mounting Direction	
E	Inline Mount

❸Screw Lead	
05	5 mm
10	10 mm
20	20 mm

❹Stroke	
0050 to 1100	50 mm (every 50 mm) 1100 mm

❺Brake *2	
N	None
B	Yes

❻Encoder	
B	Battery-less Absolute Encoder
C	Incremental Encoder

❼Relay Cable*3	
N00	None
S01	Fixed cable 1 m
S03	Fixed cable 3 m
S05	Fixed cable 5 m
S10	Fixed cable 10 m
R01	Flexible cable 1 m
R03	Flexible cable 3 m
R05	Flexible cable 3 m
R10	Flexible cable 3 m

*1 Select the controller from P. 529.
*2 Select "Yes" for vertical use.
*3 For the external dimension drawing of the relay cable, please refer to P. 576.

EAR-subject item (product incorporating EAR99)

Specifications

Connected Controller		ECMG			ECG		
Motor		□56 Stepping Motor					
Encoder Type		Battery-less Absolute Encoder/Incremental Encoder					
Drive Method		Ball screw ø16					
Stroke mm		50 to 1100					
Screw lead mm		5	10	20	5	10	20
Max. Payload kg *1	Horizontal	80.0	70.0	30.0	80.0	70.0	30.0
	Vertical	43.3	28.3	3.3	43.3	28.3	3.3
Operating Speed Range *2 mm/s		6 to 230	12 to 430	25 to 800	6 to 150	12 to 250	25 to 500
Max. Acceleration/ Deceleration G	Horizontal	1.0			0.7		
	Vertical	0.5			0.3		
Max. Pushing Force N		965	482	241	965	482	241
Pushing Operation Speed Range mm/s		5 to 20			5 to 20		
Repeatability mm		±0.01					
Lost Motion mm		0.1 or less					
Static Allowable Moment N·m		MP: 203 MY: 203 MR: 336					
Motor Power Supply Voltage		24 VDC ±10%					
Brake	Type, Power Supply Voltage	Non-excitation operating type, 24 VDC ±10%					
	Power Consumption W	7.2					
	Holding Force N	768	384	192	768	384	192
Insulation Resistance		10 MΩ, 500 VDC					
Dielectric Strength		500 VAC for 1 minute					
Operating Ambient Temperature, Humidity		10°C to 40°C (no freezing) 35 to 80% RH (no condensation)					
Storage Ambient Temperature, Humidity		-10°C to 50°C (no freezing) 35 to 80% RH (no condensation)					
Atmosphere		No corrosive gas, explosive gas, or dust					
Protection Structure		IP20					

*1 Payload varies depending on acceleration/deceleration and speed. For details, see P. 37.
*2 Maximum speed may decrease depending on conditions.

Stroke and Max. Speed

[Connected Controller ECMG] (mm/s)

Screw Lead (mm)	Stroke (mm)								
	50 to 700	750	800	850	900	950	1,000	1050	1100
5	230	220	200	175	160	145	130	120	110
10	430		400	355	320	290	260	240	220
20	800			710	640	580	530	480	440

[Connected Controller ECG] (mm/s)

Screw Lead (mm)	Stroke (mm)				
	50 to 900	950	1,000	1050	1100
5	150	145	130	120	110
10	250			240	220
20	500			480	440

Speed and Payload

[Horizontal Installation]

[Connected Controller: ECMG] (kg)

Speed (mm/s)	Acceleration/Deceleration (G) 0.3			0.5			0.7			1.0		
	Screw lead (mm) 5	10	20	5	10	20	5	10	20	5	10	20
6	80.0			80.0			80.0			80.0		
12	80.0	70.0		80.0	70.0		80.0	70.0		80.0	70.0	
25	80.0	70.0	30.0	80.0	70.0	30.0	80.0	70.0	30.0	80.0	70.0	30.0
100	80.0	70.0	30.0	80.0	70.0	30.0	80.0	70.0	30.0	80.0	70.0	30.0
150	80.0	70.0	30.0	80.0	70.0	30.0	80.0	70.0	26.7	50.0	70.0	26.7
200	80.0	70.0	30.0	80.0	70.0	30.0	80.0	70.0	26.7	18.3	40.0	26.7
230	18.3	70.0	30.0	18.3	70.0	26.7	18.3	43.3	26.7		40.0	24.2
250		70.0	30.0		70.0	26.7		43.3	26.7		40.0	24.2
300		70.0	30.0		61.7	26.7		43.3	26.7		15.0	24.2
350		43.3	30.0		43.3	26.7		43.3	26.7		3.8	24.2
400		40.0	30.0		40.0	26.7		29.2	26.7			24.2
430		12.5	30.0		12.5	26.7		12.5	26.7			16.7
500			30.0			26.7			26.7			16.7
600			22.9			22.5			22.5			13.8
700			22.5			22.5			22.5			12.5
800			5.4			5.0			5.0			2.5

[Connected Controller: ECG] (kg)

Speed (mm/s)	Acceleration/Deceleration (G) 0.3			0.7		
	Screw lead (mm) 5	10	20	5	10	20
6	80.0			80.0		
12	80.0	70.0		80.0	70.0	
25	80.0	70.0	30.0	80.0	70.0	26.7
50	80.0	70.0	30.0	80.0	70.0	26.7
75	80.0	70.0	30.0	80.0	70.0	26.7
100	40.0	70.0	30.0	40.0	70.0	26.7
125	40.0	70.0	30.0	40.0	70.0	18.3
150	40.0	70.0	30.0	35.0	70.0	18.3
200		28.3	30.0		17.5	18.3
250		28.3	26.7		17.5	18.3
300			26.7			18.3
400			20.0			11.7
500			3.3			

[Vertical Installation]

[Connected Controller: ECMG] (kg)

Speed (mm/s)	Acceleration/Deceleration (G) 0.3			0.5		
	Screw lead (mm) 5	10	20	5	10	20
6	43.3			43.3		
12	43.3	28.3		43.3	28.3	
25	43.3	28.3	3.3	43.3	28.3	3.3
50	43.3	28.3	3.3	43.3	28.3	3.3
100	16.7	24.2	3.3	16.7	12.1	3.3
150	16.7	22.5	3.3	16.7	12.1	3.3
200	5.0	14.2	3.3	5.0	12.1	3.3
230	0.8	13.3	3.3		12.1	3.3
250		13.3	3.3		12.1	3.3
300		5.4	3.3		2.1	3.3
350		5.4	3.3		2.1	3.3
400		2.1	3.3		2.1	3.3
500			3.3			3.3
600			2.5			2.5
700			0.8			0.8

[Connected Controller: ECG] (kg)

Speed (mm/s)	Acceleration/ Deceleration (G) 0.3		
	Screw lead (mm) 5	10	20
6	43.3		
12	43.3	28.3	
25	43.3	28.3	3.3
50	43.3	28.3	3.3
75	15.0	12.5	3.3
100	15.0	12.5	3.3
125	2.9	10.0	3.3
150	2.9	10.0	3.3
200		1.7	3.3
250		1.7	3.3
300			3.3
350			0.8

Pushing Force

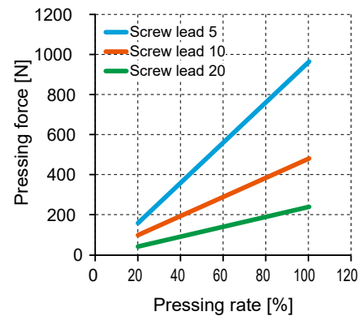

* The pushing force above is a reference value. It may vary depending on conditions such as pushing speed.

EJSG-08E

Outline Dimensions, Inline Motor Mount

● EJSG-08E

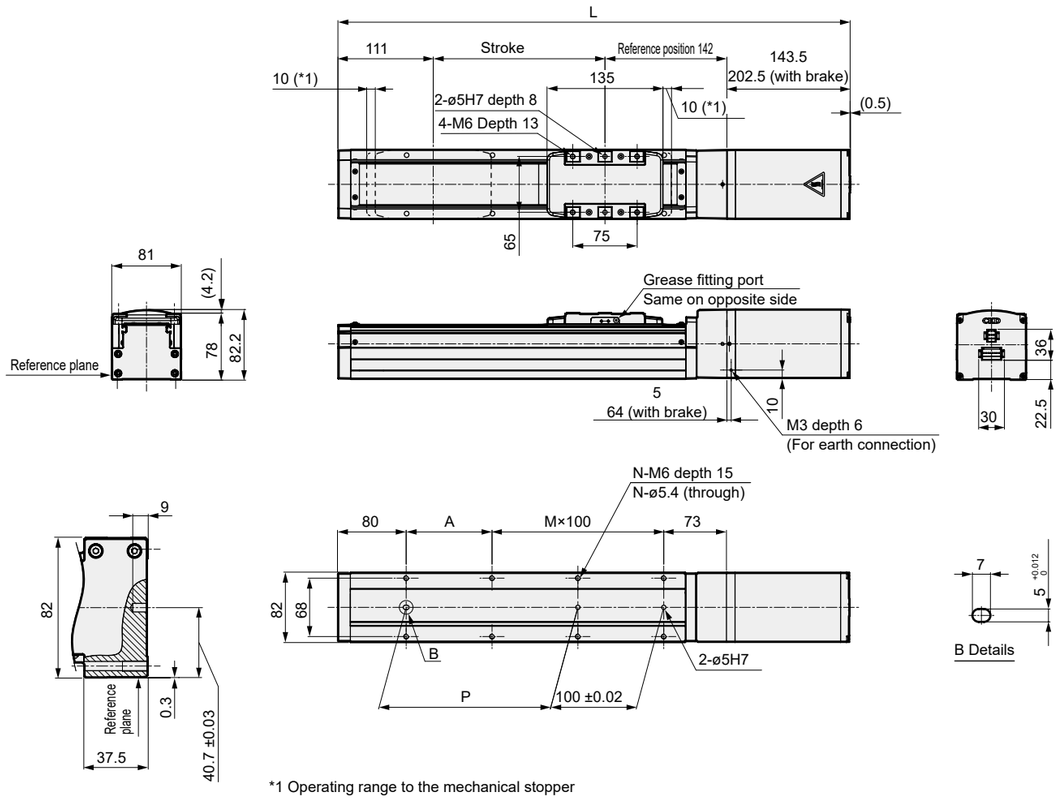

*1 Operating range to the mechanical stopper

Stroke Code		0050	0100	0150	0200	0250	0300	0350	0400	0450	0500	0550	0600	0650	0700	0750	0800
Stroke (mm)		50	100	150	200	250	300	350	400	450	500	550	600	650	700	750	800
L	Without Brake	446.5	496.5	546.5	596.5	646.5	696.5	746.5	796.5	846.5	896.5	946.5	996.5	1046.5	1096.5	1146.5	1196.5
	With Brake	505.5	555.5	605.5	655.5	705.5	755.5	805.5	855.5	905.5	955.5	1005.5	1055.5	1105.5	1155.5	1205.5	1255.5
A		150	100	50	100	50	100	50	100	50	100	50	100	50	100	50	100
M		0	1	2	2	3	3	4	4	5	5	6	6	7	7	8	8
N		4	6	8	8	10	10	12	12	14	14	16	16	18	18	20	20
P		50	100	150	200	250	300	350	400	450	500	550	600	650	700	750	800
Weight (kg)	Without Brake	5.7	6.0	6.4	6.7	7.0	7.4	7.7	8.0	8.4	8.7	9.0	9.4	9.7	10.0	10.4	10.7
	With Brake	6.7	7.1	7.4	7.7	8.1	8.4	8.7	9.1	9.4	9.7	10.1	10.4	10.7	11.1	11.4	11.8

Stroke Code		0850	0900	0950	1,000	1050	1100
Stroke (mm)		850	900	950	1,000	1050	1100
L	Without Brake	1246.5	1296.5	1346.5	1396.5	1446.5	1496.5
	With Brake	1305.5	1355.5	1405.5	1455.5	1505.5	1555.5
A		50	100	50	100	50	100
M		9	9	10	10	11	11
N		22	22	24	24	26	26
P		850	900	950	1,000	1050	1100
Weight (kg)	Without Brake	11.0	11.4	11.7	12.1	12.4	12.7
	With Brake	12.1	12.4	12.8	13.1	13.4	13.8

MEMO

Electric Actuator Slider Type

EJSG-08□

Reverse Parallel Motor Mount Type

□56 Stepping Motor

For compatible detailed model numbers, please see our website.

Model No. Notation Method

EJSG - 08 R 05 0300 N B N - C S03

❶ ❷ ❸ ❹ ❺ ❻ ❼

Applicable Controller *1
ECMG
ECG

❶Body Size	
08	Body width 82 mm

❷Motor Mounting Direction *2	
R	Right Side Return Mount
D	Bottom Side Return Mount
L	Left-Side Reverse Parallel Mount

❸Screw Lead	
05	5 mm
10	10 mm
20	20 mm

❹Stroke *2	
0050 to 1100	50 mm (every 50 mm) 1100 mm

❺Brake *3	
N	None
B	Yes

❻Encoder	
B	Battery-less Absolute Encoder
C	Incremental Encoder

❼Relay Cable *4	
N00	None
S01	Fixed cable 1 m
S03	Fixed cable 3 m
S05	Fixed cable 5 m
S10	Fixed cable 10 m
R01	Flexible cable 1 m
R03	Flexible cable 3 m
R05	Flexible cable 3 m
R10	Flexible cable 3 m

*1 Select the controller from P. 529.
*2 When "D" is selected for the motor mounting direction, the stroke can be selected from "0250 (250 mm)" to "1100 (1100 mm)".
*3 Select "Yes" for vertical use.
*4 For the external dimension drawing of the relay cable, please refer to P. 576.

EAR-subject item (product incorporating EAR99)

Specifications

Connected Controller		ECMG			ECG		
Motor		□56 Stepping Motor					
Encoder Type		Battery-less Absolute Encoder/Incremental Encoder					
Drive Method		Ball screw ø16					
Stroke mm		50 to 1100					
Screw lead mm		5	10	20	5	10	20
Max. Payload kg *1	Horizontal	80.0	70.0	30.0	80.0	70.0	30.0
	Vertical	33.3	21.7	3.3	33.3	18.3	3.3
Operating Speed Range mm/s		6 to 200	12 to 430	25 to 800	6 to 125	12 to 250	25 to 400
Max. Acceleration/ Deceleration G	Horizontal	1.0			0.7		
	Vertical	0.5			0.3		
Max. Pushing Force N		965	482	241	965	482	241
Pushing Operation Speed Range mm/s		5 to 20			5 to 20		
Repeatability mm		±0.01					
Lost Motion mm		0.1 or less					
Static Allowable Moment N·m		MP: 203 MY: 203 MR: 336					
Motor Power Supply Voltage		24 VDC ±10%					
Brake	Type, Power Supply Voltage	Non-excitation operating type, 24 VDC ±10%					
	Power Consumption W	7.2					
	Holding Force N	768	384	192	768	384	192
Insulation Resistance		10 MΩ, 500 VDC					
Dielectric Strength		500 VAC for 1 minute					
Operating Ambient Temperature, Humidity		10°C to 40°C (no freezing) 35 to 80% RH (no condensation)					
Storage Ambient Temperature, Humidity		-10°C to 50°C (no freezing) 35 to 80% RH (no condensation)					
Atmosphere		No corrosive gas, explosive gas, or dust					
Protection Structure		IP20					

*1 Payload varies depending on acceleration/deceleration and speed. For details, see P. 41.
*2 Maximum speed may decrease depending on conditions.

Stroke and Max. Speed

[Connected Controller ECMG] (mm/s)

Screw Lead (mm)	Stroke (mm) 50 to 750	800	850	900	950	1,000	1050	1100
5	200		175	160	145	130	120	110
10	430	400	355	320	290	260	240	220
20	800		710	640	580	530	480	440

[Connected Controller ECG] (mm/s)

Screw Lead (mm)	Stroke (mm) 50 to 1000	1050	1100
5	125	120	110
10	250	240	220
20	400		

Speed and Payload

[Horizontal Installation]

[Connected Controller: ECMG] (kg)

Speed (mm/s)	Acceleration/Deceleration (G) 0.3			0.5			0.7			1.0		
	Screw lead (mm) 5	10	20	5	10	20	5	10	20	5	10	20
6	80.0			80.0			80.0			80.0		
12	80.0	70.0		80.0	70.0		80.0	70.0		80.0	70.0	
25	80.0	70.0	30.0	80.0	70.0	30.0	80.0	70.0	30.0	80.0	70.0	30.0
50	80.0	70.0	30.0	80.0	70.0	30.0	80.0	70.0	30.0	80.0	70.0	30.0
100	80.0	70.0	30.0	80.0	70.0	30.0	80.0	70.0	30.0	40.0	70.0	30.0
150	80.0	70.0	30.0	16.7	70.0	30.0	16.7	70.0	26.7	8.8	70.0	26.7
200	80.0	70.0	30.0	16.7	70.0	30.0	16.7	70.0	26.7		40.0	26.7
250		70.0	30.0		68.3	26.7		43.3	26.7		40.0	24.2
300		70.0	30.0		61.7	26.7		43.3	26.7		15.0	24.2
350		43.3	30.0		43.3	26.7		40.0	26.7		3.8	16.3
400		40.0	30.0		40.0	26.7		25.0	26.7			16.3
430		12.5	30.0		12.5	26.7		12.5	26.7			15.8
500			30.0			26.7			26.7			15.8
600			16.7			16.7			16.7			9.6
700			16.7			16.7			16.7			9.2
800			3.8			3.3			3.3			1.7

[Connected Controller: ECG] (kg)

Speed (mm/s)	Acceleration/Deceleration (G) 0.3			0.7		
	Screw lead (mm) 5	10	20	5	10	20
6	80.0			80.0		
12	80.0	70.0		80.0	70.0	
25	80.0	70.0	30.0	80.0	70.0	26.7
50	80.0	70.0	30.0	80.0	70.0	26.7
75	68.3	70.0	30.0	68.3	70.0	26.7
100	40.0	70.0	30.0	40.0	70.0	26.7
125	40.0	70.0	30.0	40.0	30.0	18.3
150		70.0	30.0		30.0	18.3
200		28.3	30.0		17.5	18.3
250		21.7	6.7		17.5	6.7
300			6.7			6.7
400			3.3			3.3

[Vertical Installation]

[Connected Controller: ECMG] (kg)

Speed (mm/s)	Acceleration/Deceleration (G) 0.3			0.5		
	Screw lead (mm) 5	10	20	5	10	20
6	33.3			33.3		
12	33.3	21.7		33.3	21.7	
25	33.3	21.7	3.3	33.3	21.7	3.3
50	33.3	21.7	3.3	33.3	21.7	3.3
100	16.7	21.7	3.3	16.7	12.1	3.3
150	8.3	20.8	3.3	8.3	12.1	3.3
200	3.3	12.5	3.3	3.3	12.1	3.3
230		12.1	3.3		11.7	3.3
250		12.1	3.3		11.7	3.3
300		5.4	3.3		2.1	3.3
350		5.0	3.3		2.1	3.3
400		0.8	3.3			3.3
500			3.3			3.3
600			1.7			1.7

[Connected Controller: ECG] (kg)

Speed (mm/s)	Acceleration/ Deceleration (G) 0.3		
	Screw lead (mm) 5	10	20
6	33.3		
12	33.3	18.3	
25	33.3	18.3	3.3
50	25.0	18.3	3.3
75	15.0	12.5	3.3
100	12.5	12.5	3.3
125	2.9	8.3	3.3
150		8.3	3.3
200		1.7	3.3
250			3.3
300			3.3
350			0.8

Pushing Force

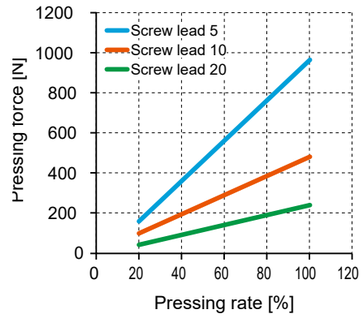

* The pushing force above is a reference value. It may vary depending on conditions such as pushing speed.

External Dimension Drawing Motor Right Side Return Mount

● EJSG-08R

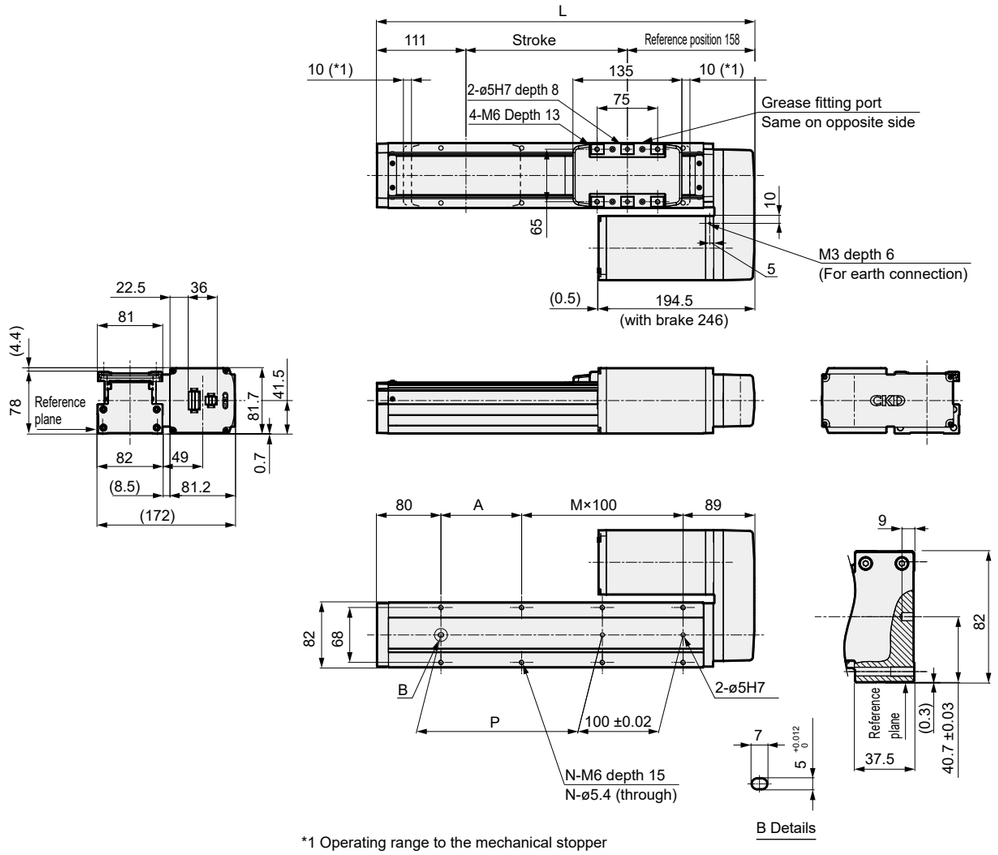

*1 Operating range to the mechanical stopper

Stroke Code		0050	0100	0150	0200	0250	0300	0350	0400	0450	0500	0550	0600	0650	0700	0750	0800
Stroke (mm)		50	100	150	200	250	300	350	400	450	500	550	600	650	700	750	800
L		319	369	419	469	519	569	619	669	719	769	819	869	919	969	1019	1069
A		150	100	50	100	50	100	50	100	50	100	50	100	50	100	50	100
M		0	1	2	2	3	3	4	4	5	5	6	6	7	7	8	8
N		4	6	8	8	10	10	12	12	14	14	16	16	18	18	20	20
P		50	100	150	200	250	300	350	400	450	500	550	600	650	700	750	800
Weight (kg)	Without Brake	5.9	6.2	6.6	6.9	7.2	7.6	7.9	8.2	8.6	8.9	9.2	9.6	9.9	10.2	10.6	10.9
	With Brake	6.9	7.3	7.6	7.9	8.3	8.6	8.9	9.3	9.6	9.9	10.3	10.6	10.9	11.3	11.6	12.0

Stroke Code		0850	0900	0950	1,000	1050	1100
Stroke (mm)		850	900	950	1,000	1050	1100
L		1119	1169	1219	1269	1319	1369
A		50	100	50	100	50	100
M		9	9	10	10	11	11
N		22	22	24	24	26	26
P		850	900	950	1,000	1050	1100
Weight (kg)	Without Brake	11.3	11.6	11.9	12.3	12.6	12.9
	With Brake	12.3	12.6	13.0	13.3	13.6	14.0

External Dimension Drawing Bottom-Mounted Reverse Parallel Motor Mount

● EJSG-08D

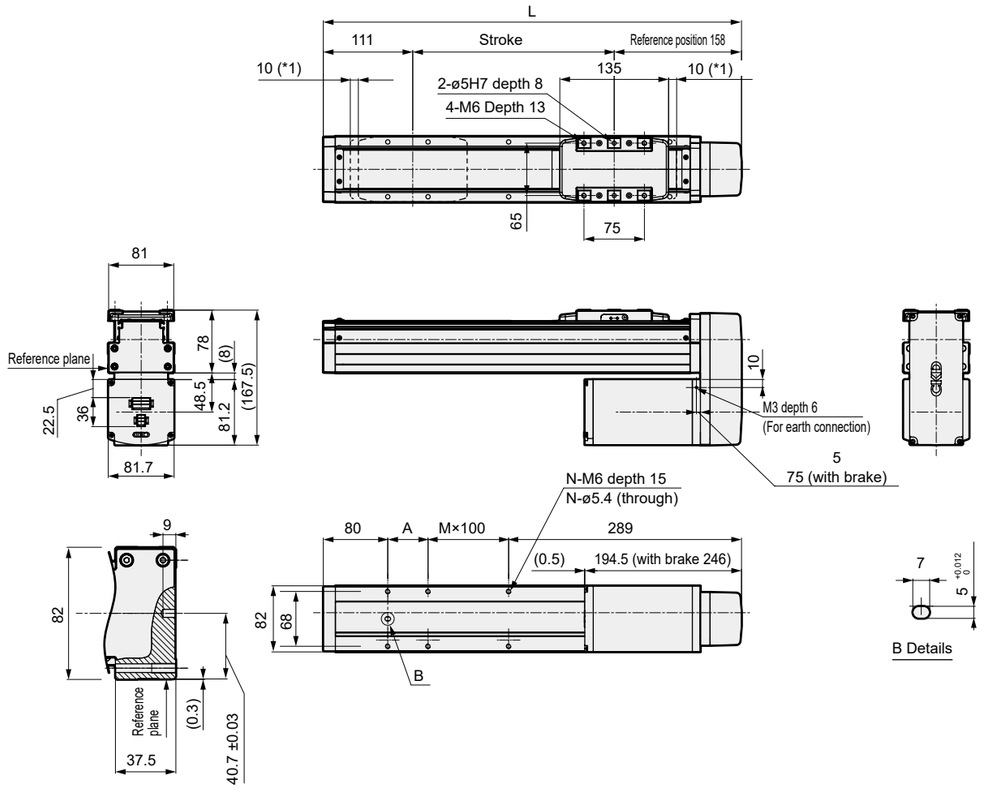

*1 Operating range to the mechanical stopper

Stroke Code		0250	0300	0350	0400	0450	0500	0550	0600	0650	0700	0750	0800	0850	0900	0950	1,000
Stroke (mm)		250	300	350	400	450	500	550	600	650	700	750	800	850	900	950	1,000
L		519	569	619	669	719	769	819	869	919	969	1019	1069	1119	1169	1219	1269
A		50	100	50	100	50	100	50	100	50	100	50	100	50	100	50	100
M		1	1	2	2	3	3	4	4	5	5	6	6	7	7	8	8
N		6	6	8	8	10	10	12	12	14	14	16	16	18	18	20	20
Weight (kg)	Without Brake	7.2	7.6	7.9	8.2	8.6	8.9	9.2	9.6	9.9	10.2	10.6	10.9	11.3	11.6	11.9	12.3
	With Brake	8.3	8.6	8.9	9.3	9.6	9.9	10.3	10.6	10.9	11.3	11.6	12.0	12.3	12.6	13.0	13.3

Stroke Code		1050	1100
Stroke (mm)		1050	1100
L		1319	1369
A		50	100
M		9	9
N		22	22
Weight (kg)	Without Brake	12.6	12.9
	With Brake	13.6	14.0

External Dimension Drawing Left-Side Reverse Parallel Motor Mount

● EJSG-08L

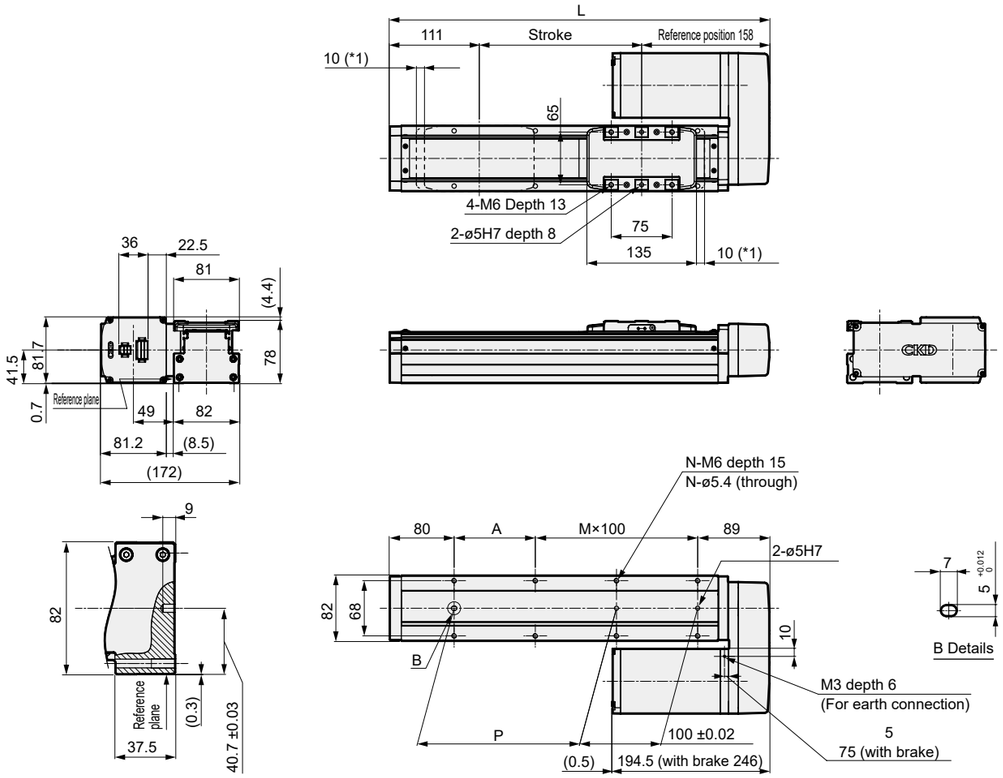

*1 Operating range to the mechanical stopper

Stroke Code		0050	0100	0150	0200	0250	0300	0350	0400	0450	0500	0550	0600	0650	0700	0750	0800
Stroke (mm)		50	100	150	200	250	300	350	400	450	500	550	600	650	700	750	800
L		319	369	419	469	519	569	619	669	719	769	819	869	919	969	1019	1069
A		150	100	50	100	50	100	50	100	50	100	50	100	50	100	50	100
M		0	1	2	2	3	3	4	4	5	5	6	6	7	7	8	8
N		4	6	8	8	10	10	12	12	14	14	16	16	18	18	20	20
P		50	100	150	200	250	300	350	400	450	500	550	600	650	700	750	800
Weight (kg)	Without Brake	5.9	6.2	6.6	6.9	7.2	7.6	7.9	8.2	8.6	8.9	9.2	9.6	9.9	10.2	10.6	10.9
	With Brake	6.9	7.3	7.6	7.9	8.3	8.6	8.9	9.3	9.6	9.9	10.3	10.6	10.9	11.3	11.6	12.0

Stroke Code		0850	0900	0950	1,000	1050	1100
Stroke (mm)		850	900	950	1,000	1050	1100
L		1119	1169	1219	1269	1319	1369
A		50	100	50	100	50	100
M		9	9	10	10	11	11
N		22	22	24	24	26	26
P		850	900	950	1,000	1050	1100
Weight (kg)	Without Brake	11.3	11.6	11.9	12.3	12.6	12.9
	With Brake	12.3	12.6	13.0	13.3	13.6	14.0

MEMO

Slider Type
EJSG
EBS
Ending

EJSG-G

Electric Actuator with Motor Specification

Slider Type Dust-proof Specification

CONTENTS

Product Introducti 2
System Table 48
●Specifications, Model No. Notation, External Dimension Drawings
· EJSG-04□-G 52
· EJSG-05□-G 56
· EJSG-08□-G 60
●Model Selection 87
●Technical Data 87
Precautions for Use 96
Model Selection Check Sheet 98

EJSG-G Series

System Table

Controller	Actuator Model No.		Motor Size	Motor Mounting Direction	Body Width (mm)	Screw Lead (mm)	Max. Payload (kg) Horizontal	Max. Payload (kg) Vertical	Max. Pushing Force (N)	Stroke (mm) and Max. Speed (mm/s) 50 mm	100	150	200	250	300	350	400	450	500	550	600	650	700	750	800	850	900	950	1,000	1050	1100	Page
ECMG Series		EJSG-04E06-G	□35	Straight	44	6	20.0	9.2	155	450 mm/s									400	340	290	250	220	190	170							52
		EJSG-04E12-G				12	15.0	3.3	77	900									800	680	580	500	440	390	340							
		EJSG-04R/D/L06-G		Return		6	20.0	9.2	155	375										340	290	250	220	190	170							54
		EJSG-04R/D/L12-G				12	15.0	3.3	77	600											580	500	440	390	340							
		EJSG-05E05-G	□42	Straight	54	5	40.0	14.2	220	375									360	300	260	225	200	175	150							56
		EJSG-05E10-G				10	27.5	7.1	110	750									720	615	525	455	400	355	315							
		EJSG-05E20-G				20	18.3	2.5	55	1120											1050	910	800	710	630							
		EJSG-05R/D/L05-G		Return		5	40.0	10.0	220	350										300	260	225	220	175	150							58
		EJSG-05R/D/L10-G				10	27.5	3.3	110	635										615	525	455	400	355	315							
		EJSG-05R/D/L20-G				20	18.3	0.8	55	1120											1050	910	800	710	630							
		EJSG-08E05-G	□56	Straight	82	5	80.0	43.3	965	230														220	200	175	160	145	130	120	110	60
		EJSG-08E10-G				10	70.0	28.3	482	430															400	355	320	290	260	240	220	
		EJSG-08E20-G				20	30.0	3.3	241	800																710	640	580	530	480	440	
		EJSG-08R/D/L05-G		Return		5	80.0	33.3	965	200																175	160	145	130	120	110	62
		EJSG-08R/D/L10-G				10	70.0	21.7	482	430															400	355	320	290	260	240	220	
		EJSG-08R/D/L20-G				20	30.0	3.3	241	800																710	640	580	530	480	440	

* This data is for an acceleration of 0.3 G.
* For wall mounting, the payload is the same as for horizontal installation.

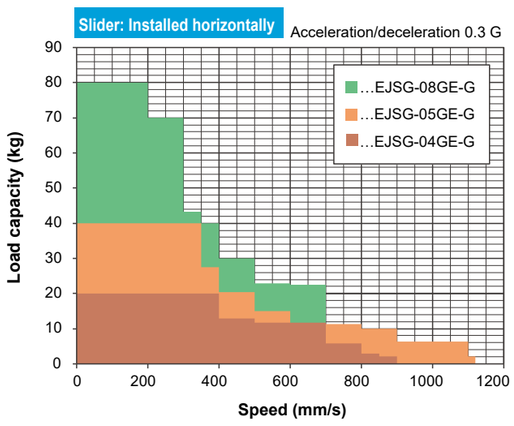

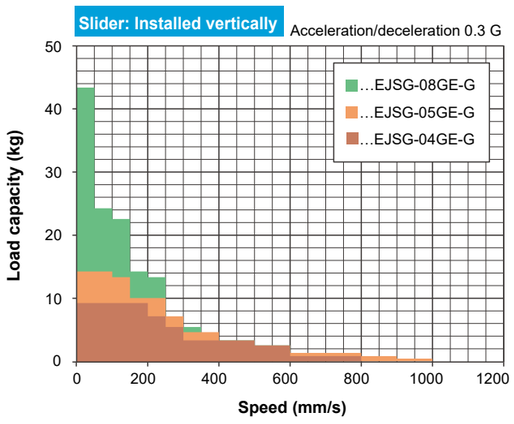

EJSG-G Series

System Table

Controller	Actuator Model No.		Motor Size	Motor Mounting Direction	Body Width (mm)	Screw Lead (mm)	Max. Payload (kg) Horizontal	Max. Payload (kg) Vertical	Max. Pushing Force (N)	Stroke (mm) and Max. Speed (mm/s)	Page
ECG Series		EJSG-04E06-G	□35	Straight	44	6	20.0	9.2	155	50 mm: 320 mm/s; 600: 290; 650: 250; 700: 220; 750: 190; 800: 170	52
		EJSG-04E12-G				12	15.0	3.3	77	50 mm: 500; 700: 440; 750: 390; 800: 340	
		EJSG-04R/D/L06-G		Return		6	20.0	9.2	155	50 mm: 250; 700: 220; 750: 190; 800: 170	54
		EJSG-04R/D/L12-G				12	11.7	3.3	77	50 mm: 400; 750: 390; 800: 340	
		EJSG-05E05-G	□42	Straight	54	5	40.0	14.0	220	50 mm: 290; 600: 260; 650: 225; 700: 200; 750: 175; 800: 150	56
		EJSG-05E10-G				10	27.5	7.0	110	50 mm: 500; 650: 455; 700: 400; 750: 355; 800: 315	
		EJSG-05E20-G				20	18.3	2.5	55	50 mm: 850; 700: 800; 750: 710; 800: 630	
		EJSG-05R/D/L05-G		Return		5	40.0	10.0	220	50 mm: 250; 650: 225; 700: 200; 750: 175; 800: 150	58
		EJSG-05R/D/L10-G				10	27.5	3.3	110	50 mm: 400; 750: 355; 800: 315	
		EJSG-05R/D/L20-G				20	18.3	0.8	55	50 mm: 700; 800: 630	
		EJSG-08E05-G	□56	Straight	82	5	80.0	43.3	965	50 mm: 150; 950: 145; 1,000: 130; 1050: 120; 1100: 110	60
		EJSG-08E10-G				10	70.0	28.3	482	50 mm: 250; 1050: 240; 1100: 220	
		EJSG-08E20-G				20	30.0	3.3	241	50 mm: 500; 1050: 480; 1100: 440	
		EJSG-08R/D/L05-G		Return		5	80.0	33.3	965	50 mm: 125; 1050: 120; 1100: 110	62
		EJSG-08R/D/L10-G				10	70.0	18.3	482	50 mm: 250; 1050: 240; 1100: 220	
		EJSG-08R/D/L20-G				20	30.0	3.3	241	50 mm: 400	

* This data is for a power supply voltage and acceleration/deceleration of 0.3G.
* For wall mounting, the payload is the same as for horizontal installation.

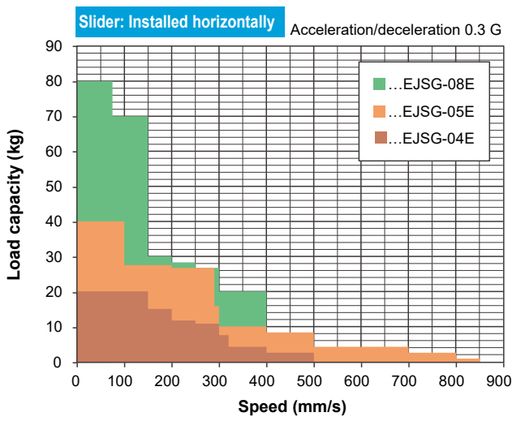

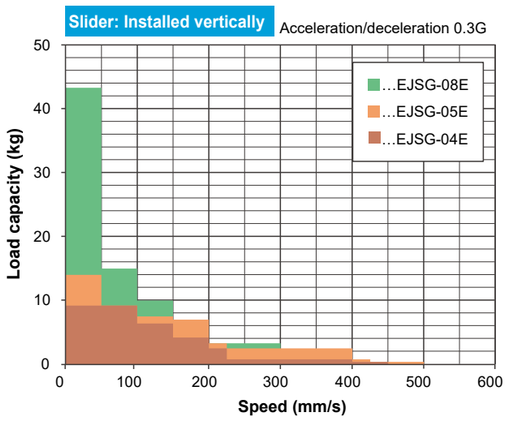

Electric Actuator Slider Type Dust-proof Specification

EJSG-04E-G

Inline Motor Mount Type

□35 Stepping Motor

For compatible detailed model numbers, please see our website.

Model No. Notation Method

EJSG - 04 E 06 0300 N B N - V C S03 - G

❶ ❷ ❸ ❹ ❺ ❻ ❼ ❽

Applicable Controller *1
ECMG
ECG

❶Body Size	
04	Body width 44 mm

❷Motor Mounting Direction	
E	Inline Mount

❸Screw Lead	
06	6 mm
12	12 mm

❹Stroke	
0050 to 0800	50 mm (every 50 mm) 800 mm

❺Brake *2	
N	None
B	Yes

❻Encoder	
B	Battery-less Absolute Encoder
C	Incremental Encoder

❼ Fitting *4	
V	Yes

❽Relay Cable*3	
N00	None
S01	Fixed cable 1 m
S03	Fixed cable 3 m
S05	Fixed cable 5 m
S10	Fixed cable 10 m
R01	Flexible cable 1 m
R03	Flexible cable 3 m
R05	Flexible cable 3 m
R10	Flexible cable 3 m

*1 Select the controller from P. 529.
*2 Select "Yes" for vertical use.
*3 For the external dimension drawing of the relay cable, please refer to P. 576.
*4 A connector cover and fitting are included to the actuator body at the time of product shipment.

Specifications

Connected Controller		ECMG		ECG	
Motor		□35 Stepping Motor			
Encoder Type		Battery-less Absolute Encoder/Incremental Encoder			
Drive Method		Ball screw ø10			
Stroke mm		50 to 800			
Screw lead mm		6	12	6	12
Max. Payload kg *1	Horizontal	20.0	15.0	20.0	15.0
	Vertical	9.2	3.3	9.2	3.3
Operating Speed Range *2 mm/s		7 to 450	15 to 900	7 to 320	15 to 500
Max. Acceleration/ Deceleration G	Horizontal	1.0		0.7	
	Vertical	0.5		0.3	
Max. Pushing Force N		155	77	155	77
Pushing Operation Speed Range mm/s		5 to 20		5 to 20	
Repeatability mm		±0.01			
Lost Motion mm		0.1 or less			
Static Allowable Moment N·m		MP: 62 MY: 62 MR: 92			
Motor Power Supply Voltage		24 VDC ±10%			
Brake	Type, Power Supply Voltage	Non-excitation operating type, 24 VDC ±10%			
	Power Consumption W	6.1			
	Holding Force N	140	70	140	70
Insulation Resistance		10 MΩ, 500 VDC			
Dielectric Strength		500 VAC for 1 minute			
Operating Ambient Temperature, Humidity		10°C to 40°C (no freezing) 35 to 80% RH (no condensation)			
Storage Ambient Temperature, Humidity		-10°C to 50°C (no freezing) 35 to 80% RH (no condensation)			
Atmosphere		Corrosive gas, explosive gas			
Protection Structure		IP50			

*1 Payload varies depending on acceleration/deceleration and speed. For details, see P. 53.
*2 Maximum speed may decrease depending on conditions.

Stroke and Max. Speed

[Connected Controller ECMG] (mm/s)

Screw Lead (mm)	Stroke (mm)							
	50 to 450	500	550	600	650	700	750	800
6	450	400	340	290	250	220	190	170
12	900	800	680	580	500	440	390	340

[Connected Controller ECG] (mm/s)

Screw Lead (mm)	Stroke (mm)					
	50 to 550	600	650	700	750	800
6	320	290	250	220	190	170
12	500			440	390	340

Speed and Payload

[Horizontal Installation]

[Connected Controller ECMG] (kg)

Speed (mm/s)	Acceleration/Deceleration (G) 0.3		0.5		0.7		1.0	
	Screw Lead (mm) 6	12	6	12	6	12	6	12
7	20.0		20.0		20.0		16.7	
15	20.0	15.0	20.0	15.0	20.0	14.2	16.7	5.4
100	20.0	15.0	20.0	15.0	20.0	14.2	16.7	5.4
150	20.0	15.0	20.0	10.0	18.3	8.3	15.0	5.4
200	20.0	15.0	20.0	10.0	15.0	8.3	14.2	5.4
300	20.0	15.0	20.0	10.0	15.0	8.3	12.1	5.4
350	20.0	15.0	20.0	10.0	13.3	8.3	12.1	5.4
400	20.0	15.0	20.0	10.0	13.3	8.3	9.2	5.4
450	11.7	12.9	11.7	10.0	11.7	8.3	8.3	5.4
500		12.9		10.0		8.3		5.4
600		11.7		9.2		7.5		5.4
700		11.7		8.3		5.8		5.4
800		5.8		5.8		5.8		2.5
850		2.9		2.5		2.5		1.7
900		2.1		1.7		1.7		0.8

[Connected Controller: ECG] (kg)

Speed (mm/s)	Acceleration/Deceleration (G) 0.3		0.7	
	Screw Lead (mm) 6	12	6	12
7	20.0		20.0	
15	20.0	15.0	20.0	15.0
50	20.0	15.0	20.0	15.0
100	20.0	15.0	20.0	15.0
150	20.0	15.0	12.5	10.8
200	15.0	15.0	12.5	10.8
250	11.7	10.8	11.7	8.3
300	7.5	10.8	7.5	8.3
320	7.5	4.2	7.5	4.2
400		4.2		4.2
500		2.5		2.5

[Vertical Installation]

[Connected Controller: ECMG] (kg)

Speed (mm/s)	Acceleration/Deceleration (G) 0.3		0.5	
	Screw Lead (mm) 6	12	6	12
7	9.2		9.2	
15	9.2	3.3	9.2	3.3
200	9.2	3.3	9.2	3.3
250	7.1	3.3	6.7	3.3
300	5.4	3.3	4.2	3.3
350	2.5	3.3	1.7	3.3
400	1.7	3.3		3.3
500		3.3		3.3
600		2.5		2.5
800		0.8		0.8

[Connected Controller ECG] (kg)

Speed (mm/s)	Acceleration/Deceleration (G) 0.3	
	Screw Lead (mm) 6	12
7	9.2	
15	9.2	3.3
50	9.2	3.3
100	9.2	3.3
150	6.7	3.3
200	4.2	3.3
225	1.7	2.5
250	1.7	2.5
275	0.4	2.5
300		2.5
350		0.8
400		0.8
450		0.4

Pushing Force

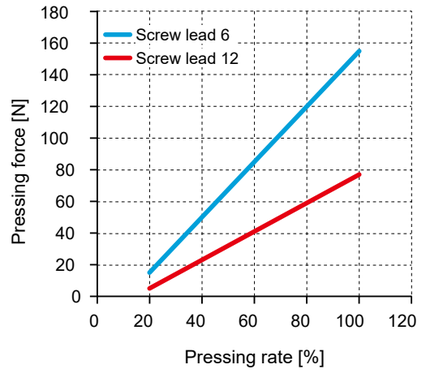

* The pushing force above is a reference value. It may vary depending on conditions such as pushing speed.

External Dimension Drawing

For actuator dimensions, please refer to P. 18.
For the dimensions of the fitting, please refer to P. 64.

Electric Actuator Slider Type Dust-proof Specification

EJSG-04□-G

Reverse Parallel Motor Mount Type

□35 Stepping Motor

For compatible detailed model numbers, please see our website.

Model No. Notation Method

EJSG - 04 R 06 0300 N B N - V C S03 - G

❶ ❷ ❸ ❹ ❺ ❻ ❼ ❽

Applicable Controller *1
ECMG
ECG

❶Body Size	
04	Body width 44 mm

❷Motor Mounting Direction *2 *3	
R	Right Side Return Mount
D	Bottom Side Return Mount
L	Left-Side Reverse Parallel Mount

❸Screw Lead	
06	6 mm
12	12 mm

❹Stroke *2 *3	
0050 to 0800	50 mm (every 50 mm) 800 mm

❺Brake *4	
N	None
B	Yes

❻Encoder	
B	Battery-less Absolute Encoder
C	Incremental Encoder

❼Fitting *6	
V	Yes

❽Relay Cable*5	
N00	None
S01	Fixed cable 1 m
S03	Fixed cable 3 m
S05	Fixed cable 5 m
S10	Fixed cable 10 m
R01	Flexible cable 1 m
R03	Flexible cable 3 m
R05	Flexible cable 3 m
R10	Flexible cable 3 m

*1 Select the controller from P. 529.
*2 When "D" is selected for the motor mounting direction, the stroke can be selected from "0250 (250 mm)" to "0800 (800 mm)".
*3 When the motor mounting direction is "L", stroke 0050 (50 mm) cannot be selected.
*4 Select "Yes" for vertical use.
*5 For the external dimension drawing of the relay cable, please refer to P. 576.
*6 A connector cover and fitting are included to the actuator body at the time of product shipment.

Specifications

Connected Controller		ECMG		ECG	
Motor		□35 Stepping Motor			
Encoder Type		Battery-less Absolute Encoder/Incremental Encoder			
Drive Method		Ball screw ø10			
Stroke mm		50 to 500			
Screw lead mm		6	12	6	12
Max. Payload kg *1	Horizontal	20.0	15.0	20.0	11.7
	Vertical	9.2	3.3	9.2	3.3
Operating Speed Range *2 mm/s		7 to 375	15 to 600	7 to 250	15 to 400
Max. Acceleration/ Deceleration G	Horizontal	1.0		0.7	
	Vertical	0.5		0.3	
Max. Pushing Force N		155	77	155	77
Pushing Operation Speed Range mm/s		5 to 20		5 to 20	
Repeatability mm		±0.01			
Lost Motion mm		0.1 or less			
Static Allowable Moment N·m		MP: 62 MY: 62 MR: 92			
Motor Power Supply Voltage		24 VDC ±10%			
Brake	Type, Power Supply Voltage	Non-excitation operating type, 24 VDC ±10%			
	Power Consumption W	6.1			
	Holding Force N	140	70	140	70
Insulation Resistance		10 MΩ, 500 VDC			
Dielectric Strength		500 VAC for 1 minute			
Operating Ambient Temperature, Humidity		10°C to 40°C (no freezing) 35 to 80% RH (no condensation)			
Storage Ambient Temperature, Humidity		-10°C to 50°C (no freezing) 35 to 80% RH (no condensation)			
Atmosphere		Corrosive gas, explosive gas			
Protection Structure		IP50			

*1 Payload varies depending on acceleration/deceleration and speed. For details, see P. 55.
*2 Maximum speed may decrease depending on conditions.

Stroke and Max. Speed

[Connected Controller ECMG] (mm/s)

Screw Lead (mm)	Stroke (mm)						
	50 to 500	550	600	650	700	750	800
6	375	340	290	250	220	190	170
12	600		580	500	440	390	340

[Connected Controller ECG] (mm/s)

Screw Lead (mm)	Stroke (mm)			
	50 to 650	700	750	800
6	250	220	190	170
12	400		390	340

Speed and Payload

[Horizontal Installation]

[Connected Controller: ECMG] (kg)

Speed (mm/s)	Acceleration/Deceleration (G)							
	0.3		0.5		0.7		1.0	
	Screw lead (mm)							
	6	12	6	12	6	12	6	12
7	20.0		20.0		20.0		16.7	
15	20.0	15.0	20.0	15.0	20.0	14.2	16.7	5.4
100	20.0	15.0	20.0	15.0	20.0	14.2	16.7	5.4
150	20.0	15.0	20.0	10.0	18.3	8.3	15.0	5.4
200	20.0	15.0	20.0	10.0	15.0	8.3	14.2	5.4
250	20.0	15.0	20.0	10.0	15.0	8.3	12.1	5.4
300	20.0	15.0	20.0	10.0	15.0	8.3	11.7	5.4
350	20.0	15.0	20.0	10.0	13.3	8.3	11.3	5.4
375	15.8	15.0	15.8	10.0	13.3	8.3	9.2	5.4
400		15.0		10.0		8.3		5.4
450		11.7		10.0		8.3		5.4
500		0.8		0.8		0.8		

[Connected Controller: ECG] (kg)

Speed (mm/s)	Acceleration/Deceleration (G)			
	0.3		0.7	
	Screw Lead (mm)			
	6	12	6	12
7	20.0		20.0	
15	20.0	11.7	20.0	10.0
50	20.0	11.7	20.0	10.0
100	20.0	11.7	20.0	10.0
150	13.3	11.7	11.7	10.0
200	13.3	11.7	10.0	10.0
250	10.0	8.3	8.3	8.3
300		8.3		8.3
400		3.3		3.3

[Vertical Installation]

[Connected Controller: ECMG] (kg)

Speed (mm/s)	Acceleration/Deceleration (G)			
	0.3		0.5	
	Screw Lead (mm)			
	6	12	6	12
7	9.2		9.2	
15	9.2	3.3	9.2	3.3
150	9.2	3.3	9.2	3.3
200	8.3	3.3	8.3	3.3
250	5.8	3.3	5.8	3.3
300	4.6	3.3	4.2	3.3
350	2.5	3.3	1.7	3.3
375	0.8	3.3		3.3
450		2.1		2.1
500		0.8		0.8

[Connected Controller ECG] (kg)

Speed (mm/s)	Acceleration/Deceleration (G)	
	0.3	
	Screw Lead (mm)	
	6	12
7	9.2	
15	9.2	3.3
50	9.2	3.3
100	6.7	3.3
150	3.3	3.3
200	2.5	3.3
225	0.8	1.7
300		1.7
350		0.8

Pushing Force

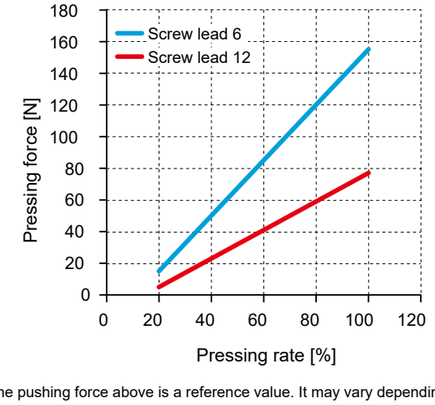

External Dimension Drawing

For actuator dimensions, please refer to P. 22 to 24.
For the dimensions of the fitting, please refer to P. 64.

* The pushing force above is a reference value. It may vary depending on conditions such as pushing speed.

Electric Actuator Slider Type Dust-proof Specification

EJSG-05E-G

Inline Motor Mount Type

□42 Stepping Motor

For compatible detailed model numbers, please see our website.

Model No. Notation Method

EJSG - 05 E 05 0300 N B N - V C S03 - G

❶ ❷ ❸ ❹ ❺ ❻ ❼ ❽

Applicable Controller *1
ECMG
ECG

❶Body Size	
05	Body width 54 mm

❷Motor Mounting Direction	
E	Inline Mount

❸Screw Lead	
05	5 mm
10	10 mm
20	20 mm

❹Stroke	
0050 to 0800	50 mm (every 50 mm) 800 mm

❺Brake *2	
N	None
B	Yes

❻Encoder	
B	Battery-less Absolute Encoder
C	Incremental Encoder

❼ Fitting *4	
V	Yes

❽Relay Cable*3	
N00	None
S01	Fixed cable 1 m
S03	Fixed cable 3 m
S05	Fixed cable 5 m
S10	Fixed cable 10 m
R01	Flexible cable 1 m
R03	Flexible cable 3 m
R05	Flexible cable 3 m
R10	Flexible cable 3 m

*1 Select the controller from P. 529.
*2 Select "Yes" for vertical use.
*3 For the external dimension drawing of the relay cable, please refer to P. 576.
*4 A connector cover and fitting are included to the actuator body at the time of product shipment.

Specifications

Connected Controller		ECMG			ECG		
Motor		□42 Stepping Motor					
Encoder Type		Battery-less Absolute Encoder/Incremental Encoder					
Drive Method		Ball screw ø12					
Stroke mm		50 to 800					
Screw lead mm		5	10	20	5	10	20
Max. Payload kg *1	Horizontal	40.0	27.5	18.3	40.0	27.5	18.3
	Vertical	14.2	7.1	2.5	14.0	7.0	2.5
Operating Speed Range *2 mm/s		6 to 375	12 to 750	25 to 1120	6 to 290	12 to 500	25 to 850
Max. Acceleration/ Deceleration G	Horizontal	1.0			0.7		
	Vertical	0.5			0.3		
Max. Pushing Force N		220	110	55	220	110	55
Pushing Operation Speed Range mm/s		5 to 20			5 to 20		
Repeatability mm		±0.01					
Lost Motion mm		0.1 or less					
Static Allowable Moment N·m		MP: 103 MY: 103 MR: 144					
Motor Power Supply Voltage		24 VDC ±10%					
Brake	Type, Power Supply Voltage	Non-excitation operating type, 24 VDC ±10%					
	Power Consumption W	6.1					
	Holding Force N	168	84	42	168	84	42
Insulation Resistance		10 MΩ, 500 VDC					
Dielectric Strength		500 VAC for 1 minute					
Operating Ambient Temperature, Humidity		10°C to 40°C (no freezing) 35 to 80% RH (no condensation)					
Storage Ambient Temperature, Humidity		-10°C to 50°C (no freezing) 35 to 80% RH (no condensation)					
Atmosphere		Corrosive gas, explosive gas					
Protection Structure		IP50					

*1 Payload varies depending on acceleration/deceleration and speed. For details, see P. 57.
*2 Maximum speed may decrease depending on conditions.

Stroke and Max. Speed

[Connected Controller ECMG] (mm/s)

Screw Lead (mm)	Stroke (mm)							
	50 to 450	500	550	600	650	700	750	800
5	375	360	300	260	225	200	175	150
10	750	720	615	525	455	400	355	315
20	1120			1050	910	800	710	630

[Connected Controller ECG] (mm/s)

Screw Lead (mm)	Stroke (mm)					
	50 to 550	600	650	700	750	800
5	290	260	225	200	175	150
10	500		455	400	355	315
20	850			800	710	630

Speed and Payload

[Horizontal Installation]

[Connected Controller: ECMG] (kg)

Speed (mm/s)	Acceleration/Deceleration (G)											
	0.3			0.5			0.7			1.0		
	Screw lead (mm)											
	5	10	20	5	10	20	5	10	20	5	10	20
6	40.0			40.0			40.0			40.0		
12	40.0	27.5		40.0	25.0		40.0	23.3		40.0	22.9	
25	40.0	27.5	18.3	40.0	25.0	11.7	40.0	23.3	10.0	40.0	22.9	8.3
100	40.0	27.5	18.3	40.0	25.0	11.7	40.0	23.3	10.0	40.0	22.9	8.3
200	40.0	27.5	18.3	40.0	25.0	11.7	40.0	18.3	10.0	30.4	14.2	6.7
250	40.0	27.5	15.0	40.0	25.0	11.7	33.3	18.3	8.3	20.4	12.9	6.3
300	40.0	27.5	15.0	40.0	25.0	11.7	24.2	18.3	8.3	13.8	12.9	6.3
350	40.0	27.5	15.0	35.8	25.0	11.7	24.2	18.3	8.3	9.2	12.9	6.3
375	20.0	27.5	15.0	20.0	25.0	11.7	20.0	18.3	8.3	7.9	12.9	6.3
400		27.5	15.0		25.0	11.7		18.3	8.3		12.9	6.3
500		20.4	13.3		20.4	10.0		18.3	8.3		10.8	6.3
600		15.0	13.3		15.0	10.0		15.0	8.3		6.3	6.3
700		6.7	11.3		6.7	8.3		6.7	6.7		3.3	5.0
750		2.9	11.3		2.9	7.5		2.9	6.7		2.9	4.2
800			11.3			7.5			6.7			4.2
900			10.0			7.5			6.7			4.2
1,000			6.3			6.3			5.0			2.9
1100			6.3			4.2			2.5			1.7
1120			2.1			2.1			2.1			1.7

[Connected Controller: ECG] (kg)

Speed (mm/s)	Acceleration/Deceleration (G)					
	0.3			0.7		
	Screw lead (mm)					
	5	10	20	5	10	20
6	40.0			40.0		
12	40.0	27.5		40.0	27.5	
25	40.0	27.5	18.3	40.0	27.5	8.3
50	40.0	27.5	18.3	40.0	27.5	8.3
100	40.0	27.5	18.3	40.0	27.5	8.3
150	26.7	27.5	10.0	26.7	27.5	6.7
200	26.7	27.5	10.0	26.7	27.5	6.7
250	26.7	15.8	10.0	26.7	12.5	6.7
290	26.7	15.8	10.0	15.8	12.5	6.7
300		15.8	10.0		12.5	6.7
400		10.0	8.3		9.2	5.0
500		5.8	8.3		2.5	5.0
700			4.2			2.5
800			2.5			1.7
850			0.8			0.4

[Vertical Installation]

[Connected Controller: ECMG] (kg)

Speed (mm/s)	Acceleration/Deceleration (G)					
	0.3			0.5		
	Screw Lead (mm)					
	5	10	20	5	10	20
6	14.2			14.2		
12	14.2	7.1		14.2	7.1	
25	14.2	7.1	2.5	14.2	7.1	2.5
100	14.2	7.1	2.5	14.2	7.1	2.5
150	13.3	7.1	2.5	13.3	7.1	2.5
250	10.0	7.1	2.5	10.0	7.1	2.5
300	6.3	7.1	2.5	6.3	7.1	2.5
350	2.9	4.6	2.5	2.9	3.8	2.5
375	1.3	4.6	2.5	1.3	3.8	2.5
400		4.6	2.5		3.8	2.5
500		2.5	1.3		1.7	1.3
600		1.7	1.3		0.8	1.3
650		0.8	1.3			1.3
800			1.3			1.3
900			0.8			0.8
1,000			0.4			

[Connected Controller: ECG] (kg)

Speed (mm/s)	Acceleration/ Deceleration (G)		
	0.3		
	Screw lead (mm)		
	5	10	20
6	14.0		
12	14.0	7.0	
25	14.0	7.0	2.5
50	14.0	7.0	2.5
100	9.2	7.0	2.5
150	7.5	7.0	2.5
200	4.2	7.0	2.5
210	3.3	2.5	2.5
225	3.3	2.5	2.5
250	2.1	2.5	2.5
300		2.5	2.5
325		2.1	2.5
350		2.1	2.5
400		1.3	2.5
425		0.8	0.4
500			0.4

Pushing Force

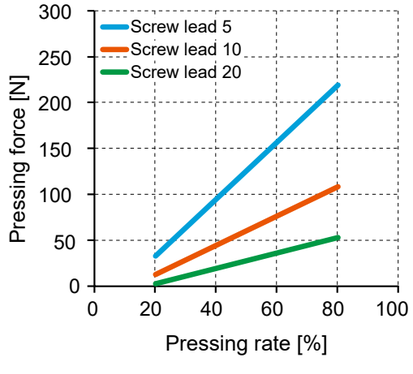

External Dimension Drawing

For actuator dimensions, please refer to P. 28.
For the dimensions of the fitting, please refer to P. 64.

* The pushing force above is a reference value. It may vary depending on conditions such as pushing speed.

Electric Actuator Slider Type Dust-proof Specification

EJSG-05□-G

Reverse Parallel Motor Mount Type

□42 Stepping Motor

For compatible detailed model numbers, please see our website.

Model No. Notation Method

EJSG - 05 R 05 0300 N B N - V C S03 - G

❶ ❷ ❸ ❹ ❺ ❻ ❼ ❽

Applicable Controller *1
ECMG
ECG

❶Body Size	
05	Body width 54 mm

❷Motor Mounting Direction *2 *3	
R	Right Side Return Mount
D	Bottom Side Return Mount
L	Left-Side Reverse Parallel Mount

❸Screw Lead	
05	5 mm
10	10 mm
20	20 mm

❹Stroke *2 *3	
0050 to 0800	50 mm (every 50 mm) 800 mm

❺Brake *4	
N	None
B	Yes

❻Encoder	
B	Battery-less Absolute Encoder
C	Incremental Encoder

❼Fitting *6	
V	Yes

❽Relay Cable*5	
N00	None
S01	Fixed cable 1 m
S03	Fixed cable 3 m
S05	Fixed cable 5 m
S10	Fixed cable 10 m
R01	Flexible cable 1 m
R03	Flexible cable 3 m
R05	Flexible cable 3 m
R10	Flexible cable 3 m

*1 Select the controller from P. 529.
*2 When "D" is selected for the motor mounting direction, the stroke can be selected from "0250 (250 mm)" to "0800 (800 mm)".
*3 When the motor mounting direction is "L", stroke 0050 (50 mm) cannot be selected.
*4 Select "Yes" for vertical use.
*5 For the external dimension drawing of the relay cable, please refer to P. 576.
*6 A connector cover and fitting are included to the actuator body at the time of product shipment.

Specifications

Connected Controller		ECMG			ECG		
Motor		□42 Stepping Motor					
Encoder Type		Battery-less Absolute Encoder/Incremental Encoder					
Drive Method		Ball screw ø12					
Stroke mm		50 to 800					
Screw lead mm		5	10	20	5	10	20
Max. Payload kg *1	Horizontal	40.0	27.5	18.3	40.0	27.5	18.3
	Vertical	10.0	3.3	0.8	10.0	3.3	0.8
Operating Speed Range *2 mm/s		6 to 325	12 to 635	25 to 1120	6 to 250	12 to 400	25 to 700
Max. Acceleration/Deceleration G	Horizontal	1.0			0.7		
	Vertical	0.5			0.3		
Max. Pushing Force N		220	110	55	220	110	55
Pushing Operation Speed Range mm/s		5 to 20					
Repeatability mm		±0.01					
Lost Motion mm		0.1 or less					
Static Allowable Moment N·m		MP: 103 MY: 103 MR: 144					
Motor Power Supply Voltage		24 VDC ±10%					
Brake	Type, Power Supply Voltage	Non-excitation operating type, 24 VDC ±10%					
	Power Consumption W	6.1					
	Holding Force N	168	84	42	168	84	42
Insulation Resistance		10 MΩ, 500 VDC					
Dielectric Strength		500 VAC for 1 minute					
Operating Ambient Temperature, Humidity		10°C to 40°C (no freezing) 35 to 80% RH (no condensation)					
Storage Ambient Temperature, Humidity		-10°C to 50°C (no freezing) 35 to 80% RH (no condensation)					
Atmosphere		Corrosive gas, explosive gas					
Protection Structure		IP50					

*1 Payload varies depending on acceleration/deceleration and speed. For details, see P. 59.
*2 Maximum speed may decrease depending on conditions.

Stroke and Max. Speed

[Connected Controller ECMG] (mm/s)

Screw Lead (mm)	Stroke (mm)						
	50 to 450	550	600	650	700	750	800
5	350	300	260	225	200	175	150
10	635	615	525	455	400	355	315
20	1120		1050	910	800	710	630

[Connected Controller ECG] (mm/s)

Screw Lead (mm)	Stroke (mm)				
	50 to 600	650	700	750	800
5	250	225	200	175	150
10	400			355	315
20	700				630

Speed and Payload

[Horizontal Installation]

[Connected Controller: ECMG] (kg)

Speed (mm/s)	Acceleration/Deceleration (G) 0.3			0.5			0.7			1.0		
	Screw lead (mm) 5	10	20	5	10	20	5	10	20	5	10	20
6	40.0			40.0			40.0			40.0		
12	40.0	27.5		40.0	25.0		40.0	23.3		40.0	22.9	
25	40.0	27.5	18.3	40.0	25.0	11.7	40.0	23.3	10.0	40.0	22.9	8.3
100	40.0	27.5	18.3	40.0	25.0	11.7	40.0	23.3	10.0	40.0	22.9	8.3
150	40.0	27.5	15.0	40.0	20.0	11.7	40.0	18.3	10.0	23.3	14.2	6.7
200	40.0	27.5	15.0	40.0	20.0	11.7	32.5	18.3	10.0	18.3	14.2	6.7
250	40.0	27.5	15.0	40.0	20.0	11.7	25.8	18.3	8.3	13.3	12.9	6.3
300	19.2	27.5	15.0	19.2	20.0	11.7	19.2	18.3	8.3		12.9	6.3
325	19.2	27.5	15.0	19.2	20.0	11.7	16.7	18.3	8.3		12.9	6.3
400		27.5	15.0		20.0	11.7		18.3	8.3		12.9	6.3
500		20.4	13.3		17.5	10.0		15.0	8.3		10.8	6.3
600		15.0	13.3		13.3	10.0		13.3	8.3		6.3	6.3
635		4.6	11.3		4.6	8.3		4.6	6.7		3.3	5.0
700			11.3			8.3			6.7			5.0
800			11.3			7.5			6.7			4.2
900			10.0			7.5			6.7			4.2
1,000			6.3			6.3			5.0			2.5
1100			6.3			4.2			2.5			1.7
1120			1.3			1.3			1.3			

[Connected Controller: ECG] (kg)

Speed (mm/s)	Acceleration/Deceleration (G) 0.3			0.7		
	Screw lead (mm) 5	10	20	5	10	20
6	40.0			40.0		
12	40.0	27.5		40.0	27.5	
25	40.0	27.5	18.3	40.0	27.5	7.5
50	40.0	27.5	18.3	40.0	27.5	7.5
100	40.0	27.5	18.3	40.0	27.5	7.5
150	26.7	23.3	10.0	26.7	20.0	5.0
200	26.7	23.3	10.0	26.7	20.0	5.0
250	8.3	11.7	10.0	8.3	11.7	5.0
300		11.7	10.0		11.7	5.0
400		3.3	6.7		3.3	4.2
500			6.7			4.2
700			3.3			1.7

[Vertical Installation]

[Connected Controller: ECMG] (kg)

Speed (mm/s)	Acceleration/Deceleration (G) 0.3			0.5		
	Screw Lead (mm) 5	10	20	5	10	20
6	10.0			10.0		
12	10.0	3.3		10.0	3.3	
25	10.0	3.3	0.8	10.0	3.3	0.8
200	10.0	3.3	0.8	10.0	3.3	0.8
250	7.5	3.3	0.8	5.8	3.3	0.8
300	3.8	3.3	0.8	1.7	3.3	0.8
325	0.8	3.3	0.8		2.9	0.8
400		3.3	0.8		2.9	0.8
500		2.5	0.8		1.7	0.8
600		0.8	0.8		0.8	0.8
900			0.8			0.8

[Connected Controller: ECG] (kg)

Speed (mm/s)	Acceleration/ Deceleration (G) 0.3		
	Screw lead (mm) 5	10	20
6	10.0		
12	10.0	3.3	
25	10.0	3.3	0.8
50	10.0	3.3	0.8
100	8.3	3.3	0.8
150	6.7	2.1	0.8
200	2.5	2.1	0.8
210	0.8	1.3	0.8
300		1.3	0.8
325		0.4	0.8
400			0.8
500			0.4

Pushing Force

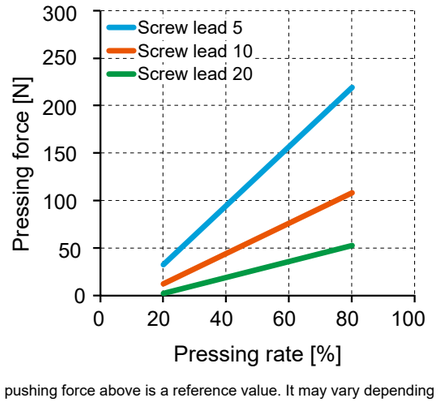

* The pushing force above is a reference value. It may vary depending on conditions such as pushing speed.

External Dimension Drawing

For actuator dimensions, please refer to P. 32 to 34.
For the dimensions of the fitting, please refer to P. 64.

Electric Actuator Slider Type Dust-proof Specification

EJSG-08E-G

Inline Motor Mount Type

□56 Stepping Motor

For compatible detailed model numbers, please see our website.

Model No. Notation Method

EJSG - 08 E 05 0300 N B N - V C S03 - G

❶ ❷ ❸ ❹ ❺ ❻ ❼ ❽

Applicable Controller *1
ECMG
ECG

❶Body Size	
08	Body width 82 mm

❷Motor Mounting Direction	
E	Inline Mount

❸Screw Lead	
05	5 mm
10	10 mm
20	20 mm

❹Stroke	
0050 to 1100	50 mm (every 50 mm) 1100 mm

❺Brake *2	
N	None
B	Yes

❻Encoder	
B	Battery-less Absolute Encoder
C	Incremental Encoder

❼ Fitting *4	
V	Yes

❽Relay Cable *3	
N00	None
S01	Fixed cable 1 m
S03	Fixed cable 3 m
S05	Fixed cable 5 m
S10	Fixed cable 10 m
R01	Flexible cable 1 m
R03	Flexible cable 3 m
R05	Flexible cable 3 m
R10	Flexible cable 3 m

*1 Select the controller from P. 529.
*2 Select "Yes" for vertical use.
*3 For the external dimension drawing of the relay cable, please refer to P. 576.
*4 A connector cover and fitting are included to the actuator body at the time of product shipment.

Specifications

Connected Controller		ECMG			ECG		
Motor		□56 Stepping Motor					
Encoder Type		Battery-less Absolute Encoder/Incremental Encoder					
Drive Method		Ball screw ø16					
Stroke mm		50 to 1100					
Screw lead mm		5	10	20	5	10	20
Max. Payload kg *1	Horizontal	80.0	70.0	30.0	80.0	70.0	30.0
	Vertical	43.3	28.3	3.3	43.3	28.3	3.3
Operating Speed Range *2 mm/s		6 to 230	12 to 430	25 to 800	6 to 150	12 to 250	25 to 500
Max. Acceleration/ Deceleration G	Horizontal	1.0			0.7		
	Vertical	0.5			0.3		
Max. Pushing Force N		965	482	241	965	482	241
Pushing Operation Speed Range mm/s		5 to 20			5 to 20		
Repeatability mm		±0.01					
Lost Motion mm		0.1 or less					
Static Allowable Moment N·m		MP: 203 MY: 203 MR: 336					
Motor Power Supply Voltage		24 VDC ±10%					
Brake	Type, Power Supply Voltage	Non-excitation operating type, 24 VDC ±10%					
	Power Consumption W	7.2					
	Holding Force N	768	384	192	768	384	192
Insulation Resistance		10 MΩ, 500 VDC					
Dielectric Strength		500 VAC for 1 minute					
Operating Ambient Temperature, Humidity		10°C to 40°C (no freezing) 35 to 80% RH (no condensation)					
Storage Ambient Temperature, Humidity		-10°C to 50°C (no freezing) 35 to 80% RH (no condensation)					
Atmosphere		Corrosive gas, explosive gas					
Protection Structure		IP50					

*1 Payload varies depending on acceleration/deceleration and speed. For details, see P. 61.
*2 Maximum speed may decrease depending on conditions.

Stroke and Max. Speed

[Connected Controller ECMG] (mm/s)

Screw Lead (mm)	Stroke (mm)								
	50 to 700	750	800	850	900	950	1,000	1050	1100
5	230	220	200	175	160	145	130	120	110
10	430		400	355	320	290	260	240	220
20	800			710	640	580	530	480	440

[Connected Controller ECG] (mm/s)

Screw Lead (mm)	Stroke (mm)				
	50 to 900	950	1,000	1050	1100
5	150	145	130	120	110
10	250			240	220
20	500			480	440

Speed and Payload

[Horizontal Installation]

[Connected Controller: ECMG] (kg)

Speed (mm/s)	Acceleration/Deceleration (G) 0.3			0.5			0.7			1.0		
	Screw lead (mm) 5	10	20	5	10	20	5	10	20	5	10	20
6	80.0			80.0			80.0			80.0		
12	80.0	70.0		80.0	70.0		80.0	70.0		80.0	70.0	
25	80.0	70.0	30.0	80.0	70.0	30.0	80.0	70.0	30.0	80.0	70.0	30.0
100	80.0	70.0	30.0	80.0	70.0	30.0	80.0	70.0	30.0	80.0	70.0	30.0
150	80.0	70.0	30.0	80.0	70.0	30.0	80.0	70.0	26.7	50.0	70.0	26.7
200	80.0	70.0	30.0	80.0	70.0	30.0	80.0	70.0	26.7	18.3	40.0	26.7
230	18.3	70.0	30.0	18.3	70.0	26.7	18.3	43.3	26.7		40.0	24.2
250		70.0	30.0		70.0	26.7		43.3	26.7		40.0	24.2
300		70.0	30.0		61.7	26.7		43.3	26.7		15.0	24.2
350		43.3	30.0		43.3	26.7		43.3	26.7		3.8	24.2
400		40.0	30.0		40.0	26.7		29.2	26.7			24.2
430		12.5	30.0		12.5	26.7		12.5	26.7			16.7
500			30.0			26.7			26.7			16.7
600			22.9			22.5			22.5			13.8
700			22.5			22.5			22.5			12.5
800			5.4			5.0			5.0			2.5

[Connected Controller: ECG] (kg)

Speed (mm/s)	Acceleration/Deceleration (G) 0.3			0.7		
	Screw lead (mm) 5	10	20	5	10	20
6	80.0			80.0		
12	80.0	70.0		80.0	70.0	
25	80.0	70.0	30.0	80.0	70.0	26.7
50	80.0	70.0	30.0	80.0	70.0	26.7
75	80.0	70.0	30.0	80.0	70.0	26.7
100	40.0	70.0	30.0	40.0	70.0	26.7
125	40.0	70.0	30.0	40.0	70.0	18.3
150	40.0	70.0	30.0	35.0	70.0	18.3
200		28.3	30.0		17.5	18.3
250		28.3	26.7		17.5	18.3
300			26.7			18.3
400			20.0			11.7
500			3.3			

[Vertical Installation]

[Connected Controller: ECMG] (kg)

Speed (mm/s)	Acceleration/Deceleration (G) 0.3			0.5		
	Screw lead (mm) 5	10	20	5	10	20
6	43.3			43.3		
12	43.3	28.3		43.3	28.3	
25	43.3	28.3	3.3	43.3	28.3	3.3
50	43.3	28.3	3.3	43.3	28.3	3.3
100	16.7	24.2	3.3	16.7	12.1	3.3
150	16.7	22.5	3.3	16.7	12.1	3.3
200	5.0	14.2	3.3	5.0	12.1	3.3
230	0.8	13.3	3.3		12.1	3.3
250		13.3	3.3		12.1	3.3
300		5.4	3.3		2.1	3.3
350		5.4	3.3		2.1	3.3
400		2.1	3.3		2.1	3.3
500			3.3			3.3
600			2.5			2.5
700			0.8			0.8

[Connected Controller: ECG] (kg)

Speed (mm/s)	Acceleration/ Deceleration (G) 0.3		
	Screw lead (mm) 5	10	20
6	43.3		
12	43.3	28.3	
25	43.3	28.3	3.3
50	43.3	28.3	3.3
75	15.0	12.5	3.3
100	15.0	12.5	3.3
125	2.9	10.0	3.3
150	2.9	10.0	3.3
200		1.7	3.3
250		1.7	3.3
300			3.3
350			0.8

Pushing Force

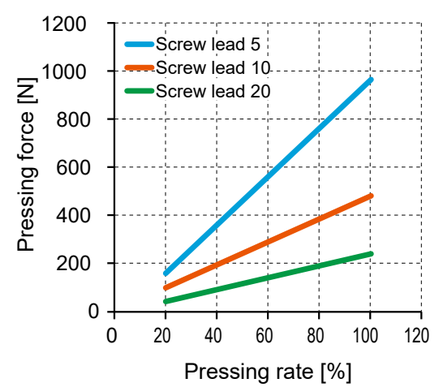

* The pushing force above is a reference value. It may vary depending on conditions such as pushing speed.

External Dimension Drawing

For actuator dimensions, please refer to P. 38.
For the dimensions of the fitting, please refer to P. 64.

Electric Actuator Slider Type Dust-proof Specification

EJSG-08□-G

Reverse Parallel Motor Mount Type

□56 Stepping Motor

For compatible detailed model numbers, please see our website.

Model No. Notation Method

EJSG - 08 R 05 0300 N B N - V C S03 - G

❶ ❷ ❸ ❹ ❺ ❻ ❼ ❽

Applicable Controller *1
ECMG
ECG

❶Body Size	
08	Body width 82 mm

❷Motor Mounting Direction *2	
R	Right Side Return Mount
D	Bottom Side Return Mount
L	Left-Side Reverse Parallel Mount

❸Screw Lead	
05	5 mm
10	10 mm
20	20 mm

❹Stroke *2	
0050 to 1100	50 mm (every 50 mm) 1100 mm

❺Brake *3	
N	None
B	Yes

❻Encoder	
B	Battery-less Absolute Encoder
C	Incremental Encoder

❼ Fitting *5	
V	Yes

❽Relay Cable *4	
N00	None
S01	Fixed cable 1 m
S03	Fixed cable 3 m
S05	Fixed cable 5 m
S10	Fixed cable 10 m
R01	Flexible cable 1 m
R03	Flexible cable 3 m
R05	Flexible cable 3 m
R10	Flexible cable 3 m

*1 Select the controller from P. 529.
*2 When "D" is selected for the motor mounting direction, the stroke can be selected from "0250 (250 mm)" to "1100 (1100 mm)".
*3 Select "Yes" for vertical use.
*4 For the external dimension drawing of the relay cable, please refer to P. 576.
*5 A connector cover and fitting are included to the actuator body at the time of product shipment.

Specifications

Connected Controller		ECMG			ECG		
Motor		□56 Stepping Motor					
Encoder Type		Battery-less Absolute Encoder/Incremental Encoder					
Drive Method		Ball screw ø16					
Stroke mm		50 to 1100					
Screw lead mm		5	10	20	5	10	20
Max. Payload kg *1	Horizontal	80.0	70.0	30.0	80.0	70.0	30.0
	Vertical	33.3	21.7	3.3	33.3	18.3	3.3
Operating Speed Range mm/s		6 to 200	12 to 430	25 to 800	6 to 125	12 to 250	25 to 400
Max. Acceleration/ Deceleration G	Horizontal	1.0			0.7		
	Vertical	0.5			0.3		
Max. Pushing Force N		965	482	241	965	482	241
Pushing Operation Speed Range mm/s		5 to 20			5 to 20		
Repeatability mm		±0.01					
Lost Motion mm		0.1 or less					
Static Allowable Moment N·m		MP: 203 MY: 203 MR: 336					
Motor Power Supply Voltage		24 VDC ±10%					
Brake	Type, Power Supply Voltage	Non-excitation operating type, 24 VDC ±10%					
	Power Consumption W	7.2					
	Holding Force N	768	384	192	768	384	192
Insulation Resistance		10 MΩ, 500 VDC					
Dielectric Strength		500 VAC for 1 minute					
Operating Ambient Temperature, Humidity		10°C to 40°C (no freezing) 35 to 80% RH (no condensation)					
Storage Ambient Temperature, Humidity		-10°C to 50°C (no freezing) 35 to 80% RH (no condensation)					
Atmosphere		Corrosive gas, explosive gas					
Protection Structure		IP50					

*1 Payload varies depending on acceleration/deceleration and speed. For details, see P. 63.
*2 Maximum speed may decrease depending on conditions.

Stroke and Max. Speed

[Connected Controller ECMG] (mm/s)

Screw Lead (mm)	Stroke (mm) 50 to 750	800	850	900	950	1,000	1050	1100
5	200		175	160	145	130	120	110
10	430	400	355	320	290	260	240	220
20	800		710	640	580	530	480	440

[Connected Controller ECG] (mm/s)

Screw Lead (mm)	Stroke (mm) 50 to 1000	1050	1100
5	125	120	110
10	250	240	220
20	400		

Speed and Payload

[Horizontal Installation]

[Connected Controller: ECMG] (kg)

Speed (mm/s)	Acceleration/Deceleration (G) 0.3			0.5			0.7			1.0		
	Screw lead (mm) 5	10	20	5	10	20	5	10	20	5	10	20
6	80.0			80.0			80.0			80.0		
12	80.0	70.0		80.0	70.0		80.0	70.0		80.0	70.0	
25	80.0	70.0	30.0	80.0	70.0	30.0	80.0	70.0	30.0	80.0	70.0	30.0
50	80.0	70.0	30.0	80.0	70.0	30.0	80.0	70.0	30.0	80.0	70.0	30.0
100	80.0	70.0	30.0	80.0	70.0	30.0	80.0	70.0	30.0	40.0	70.0	30.0
150	80.0	70.0	30.0	16.7	70.0	30.0	16.7	70.0	26.7	8.8	70.0	26.7
200	80.0	70.0	30.0	16.7	70.0	30.0	16.7	70.0	26.7		40.0	26.7
250		70.0	30.0		68.3	26.7		43.3	26.7		40.0	24.2
300		70.0	30.0		61.7	26.7		43.3	26.7		15.0	24.2
350		43.3	30.0		43.3	26.7		40.0	26.7		3.8	16.3
400		40.0	30.0		40.0	26.7		25.0	26.7			16.3
430		12.5	30.0		12.5	26.7		12.5	26.7			15.8
500			30.0			26.7			26.7			15.8
600			16.7			16.7			16.7			9.6
700			16.7			16.7			16.7			9.2
800			3.8			3.3			3.3			1.7

[Connected Controller: ECG] (kg)

Speed (mm/s)	Acceleration/Deceleration (G) 0.3			0.7		
	Screw lead (mm) 5	10	20	5	10	20
6	80.0			80.0		
12	80.0	70.0		80.0	70.0	
25	80.0	70.0	30.0	80.0	70.0	26.7
50	80.0	70.0	30.0	80.0	70.0	26.7
75	68.3	70.0	30.0	68.3	70.0	26.7
100	40.0	70.0	30.0	40.0	70.0	26.7
125	40.0	70.0	30.0	40.0	30.0	18.3
150		70.0	30.0		30.0	18.3
200		28.3	30.0		17.5	18.3
250		21.7	6.7		17.5	6.7
300			6.7			6.7
400			3.3			3.3

[Vertical Installation]

[Connected Controller: ECMG] (kg)

Speed (mm/s)	Acceleration/Deceleration (G) 0.3			0.5		
	Screw lead (mm) 5	10	20	5	10	20
6	33.3			33.3		
12	33.3	21.7		33.3	21.7	
25	33.3	21.7	3.3	33.3	21.7	3.3
50	33.3	21.7	3.3	33.3	21.7	3.3
100	16.7	21.7	3.3	16.7	12.1	3.3
150	8.3	20.8	3.3	8.3	12.1	3.3
200	3.3	12.5	3.3	3.3	12.1	3.3
230		12.1	3.3		11.7	3.3
250		12.1	3.3		11.7	3.3
300		5.4	3.3		2.1	3.3
350		5.0	3.3		2.1	3.3
400		0.8	3.3			3.3
500			3.3			3.3
600			1.7			1.7

[Connected Controller: ECG] (kg)

Speed (mm/s)	Acceleration/ Deceleration (G) 0.3		
	Screw lead (mm) 5	10	20
6	33.3		
12	33.3	18.3	
25	33.3	18.3	3.3
50	25.0	18.3	3.3
75	15.0	12.5	3.3
100	12.5	12.5	3.3
125	2.9	8.3	3.3
150		8.3	3.3
200		1.7	3.3
250			3.3
300			3.3
350			0.8

Pushing Force

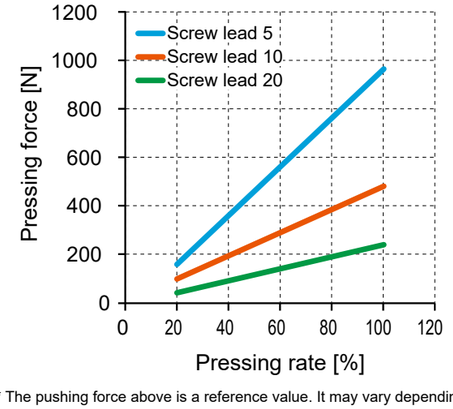

External Dimension Drawing

For actuator dimensions, please refer to P. 42 to 44.
For the dimensions of the fitting, please refer to P. 64.

* The pushing force above is a reference value. It may vary depending on conditions such as pushing speed.

External Dimension Drawing

● EJSG-04-V-G (Fitting part)

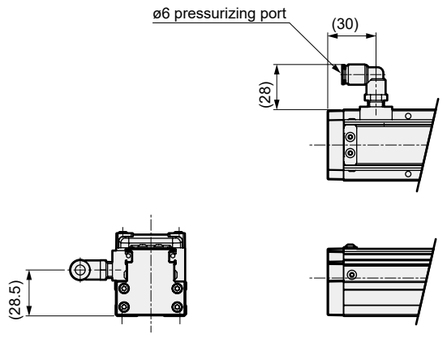

* For actuator dimensions, please refer to P. 18, 22 to 24.
* The fitting is included.

● EJSG-05-V-G (Fitting part)

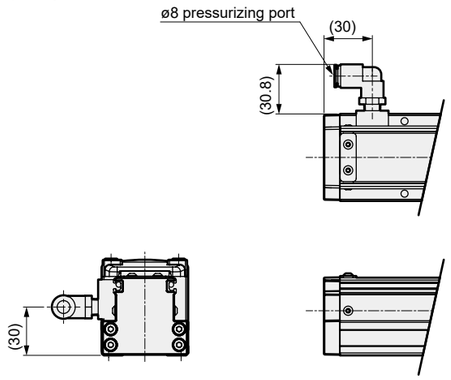

* For actuator dimensions, please refer to P. 28, 32 to 34.
* The fitting is included.

● EJSG-08-V-G (Fitting part)

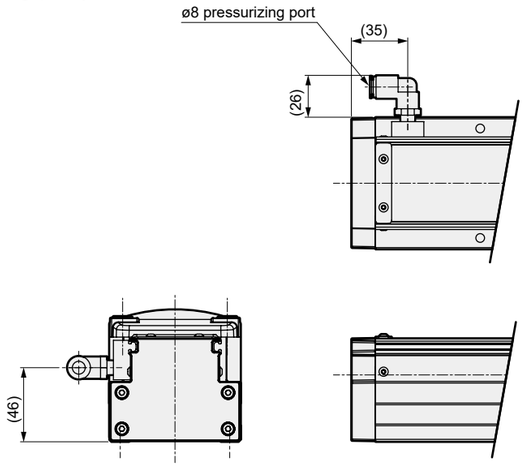

* For actuator dimensions, please refer to P. 38, 42 to 44.
* The fitting is included.

Protective Structure

● Protection Structure

■ IEC (International Electrotechnical Commission: International Electrotechnical Commission) Standard (IEC60529)

■ JIS C 0920 : 2003

IP– □□

Protection Characteristic Code (International Protection)

First Characteristic Numeral (Protection class against ingress of foreign solid objects)

First Characteristic Numeral	Degree of Protection	
0	No protection	
1	ø50 mm	Solid objects with a diameter of 50 mm or more do not ingress.
2	ø12.5 mm	Solid objects with a diameter of 12.5 mm or more do not ingress.
3	2.5 mm	Solid objects with a diameter of 2.5 mm or more do not ingress.
4	1 mm	Solid objects with a diameter of 1.0 mm or more do not ingress.
5	Dust-protected type	Dust does not ingress in a quantity sufficient to interfere with the normal operation and safety of the equipment.
6	Dust-tight type	No ingress of dust inside.

Second Characteristic Numeral (Degree of protection against ingress of water)

Second Characteristic Numeral	Degree of Protection	
0	No protection	
1	Protection against vertically falling water drops	No harmful effects from vertically falling water drops.
2	Protection against vertically dripping water when tilted up to 15 degrees (15°)	No harmful effects from water drops falling at an inclination of up to 15 degrees from vertical on either side.
3	Protection against spraying water	No harmful effects from water sprayed at an angle of up to 60 degrees from vertical on either side.
4	Protection against splashing water	No harmful effects from splashing water from any direction.
5	Protection against water jets	No harmful effects from water jets from a nozzle from any direction.
6	Protection against powerful water jets	No harmful effects from strong direct jets of water from any direction.
7	Protection against immersion in water	Water does not ingress when immersed in water under defined conditions.
8	Protection against continuous immersion in water	Can be used when continuously immersed in water.

Electric Actuator with Motor Specification

EJSG-C

Slider Type Low Dust Emission Specification

CONTENTS

Product Introduction 2
System Table 68
●Specifications, Model No. Notation, External Dimension Drawings
· EJSG-04□-C 72
· EJSG-05□-C 76
· EJSG-08□-C 80
●Model Selection 87
●Technical Data 87
Precautions for Use 96
Model Selection Check Sheet 98

EJSG-C Series

System Table

Controller	Actuator Model No.		Motor Size	Motor Mounting Direction	Body Width (mm)	Screw Lead (mm)	Max. Payload (kg) Horizontal	Max. Payload (kg) Vertical	Max. Pushing Force (N)	Stroke (mm) and Max. Speed (mm/s)	Page
ECMG Series		EJSG-04E06-C	□35	Straight	44	6	20.0	9.2	155	50 mm: 360 mm/s; 550: 340; 600: 290; 650: 250; 700: 220; 750: 190; 800: 170	72
		EJSG-04E12-C				12	15.0	3.3	77	50 mm: 720; 550: 680; 600: 580; 650: 500; 700: 440; 750: 390; 800: 340	
		EJSG-04R/D/L06-C		Reverse Parallel		6	20.0	9.2	155	50 mm: 300; 600: 290; 650: 250; 700: 220; 750: 190; 800: 170	74
		EJSG-04R/D/L12-C				12	15.0	3.3	77	50 mm: 480; 700: 440; 750: 390; 800: 340	
		EJSG-05E05-C	□42	Straight	54	5	40.0	14.2	220	50 mm: 300; 600: 260; 650: 225; 700: 200; 750: 175; 800: 150	76
		EJSG-05E10-C				10	27.5	7.1	110	50 mm: 600; 600: 525; 650: 455; 700: 400; 750: 355; 800: 315	
		EJSG-05E20-C				20	18.3	2.5	55	50 mm: 895; 700: 800; 750: 710; 800: 630	
		EJSG-05R/D/L05-C		Reverse Parallel		5	40.0	10.0	220	50 mm: 280; 600: 260; 650: 225; 700: 200; 750: 175; 800: 150	78
		EJSG-05R/D/L10-C				10	27.5	3.3	110	50 mm: 505; 650: 455; 700: 400; 750: 355; 800: 315	
		EJSG-05R/D/L20-C				20	18.3	0.8	55	50 mm: 895; 700: 800; 750: 710; 800: 630	
		EJSG-08E05-C	□56	Straight	82	5	80.0	43.3	965	50 mm: 280; 850: 175; 900: 160; 950: 145; 1,000: 130; 1050: 120; 1100: 110	80
		EJSG-08E10-C				10	70.0	28.3	482	50 mm: 340; 900: 320; 950: 290; 1,000: 260; 1050: 240; 1100: 220	
		EJSG-08E20-C				20	30.0	3.3	241	50 mm: 640; 950: 580; 1,000: 530; 1050: 480; 1100: 440	
		EJSG-08R/D/L05-C		Reverse Parallel		5	80.0	33.3	965	50 mm: 160; 950: 145; 1,000: 130; 1050: 120; 1100: 110	82
		EJSG-08R/D/L10-C				10	70.0	21.7	482	50 mm: 340; 900: 320; 950: 290; 1,000: 260; 1050: 240; 1100: 220	
		EJSG-08R/D/L20-C				20	30.0	3.3	241	50 mm: 640; 950: 580; 1,000: 530; 1050: 480; 1100: 440	

* This data is for an acceleration of 0.3 G.
* For wall mounting, the payload is the same as for horizontal installation.

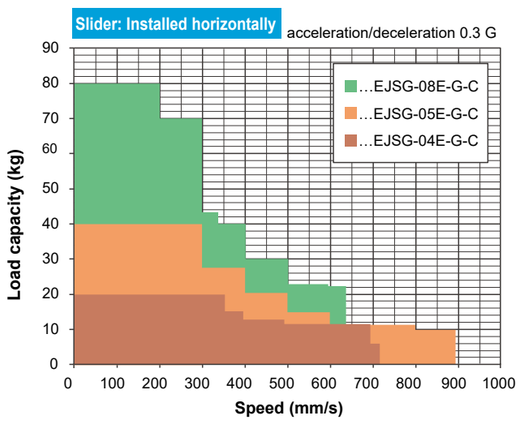

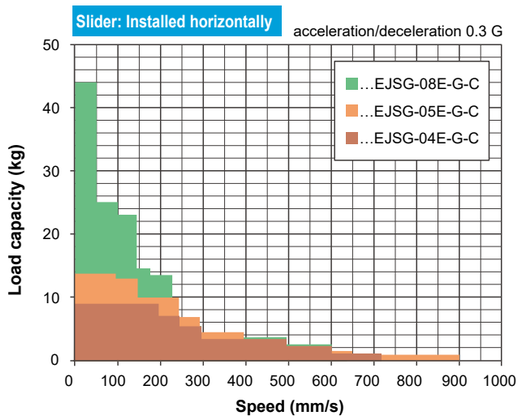

EJSG-C Series

System Table

Controller	Actuator Model No.		Motor Size	Motor Mounting Direction	Body Width (mm)	Screw Lead (mm)	Max. Payload (kg) Horizontal	Max. Payload (kg) Vertical	Max. Pushing Force (N)	Stroke (mm) and Max. Speed (mm/s)	Page
ECG Series		EJSG-04E06-C	□35	Straight	44	6	20.0	9.2	155	50 mm: 260 mm/s; 600: 250; 650: 220; 700: 190; 750: 170	72
		EJSG-04E12-C				12	15.0	3.3	77	50 mm–600: 400; 650: 390; 700: 340	
		EJSG-04R/D/L06-C		Reverse Parallel		6	20.0	9.2	155	50 mm–600: 200; 650: 190; 700: 170	74
		EJSG-04R/D/L12-C				12	11.7	3.3	77	50 mm–700: 320	
		EJSG-05E05-C	□42	Straight	54	5	40.0	14.0	220	50 mm–600: 230; 650: 225; 700: 200; 750: 175; 800: 150	76
		EJSG-05E10-C				10	27.5	7.0	110	50 mm–700: 400; 750: 355; 800: 315	
		EJSG-05E20-C				20	18.3	2.5	55	50 mm–800: 680; 850: 630	
		EJSG-05R/D/L05-C		Reverse Parallel		5	40.0	10.0	220	50 mm–700: 200; 750: 175; 800: 150	78
		EJSG-05R/D/L10-C				10	27.5	3.3	110	50 mm–800: 320; 850: 315	
		EJSG-05R/D/L20-C				20	18.3	0.8	55	50 mm–850: 560	
		EJSG-08E05-C	□56	Straight	82	5	80.0	43.3	965	50 mm–1100: 120; 1100: 110	80
		EJSG-08E10-C				10	70.0	28.3	482	50 mm–1100: 200	
		EJSG-08E20-C				20	30.0	3.3	241	50 mm–1100: 400	
		EJSG-08R/D/L05-C		Reverse Parallel		5	80.0	33.3	965	50 mm–1100: 100	82
		EJSG-08R/D/L10-C				10	70.0	18.3	482	50 mm–1100: 200	
		EJSG-08R/D/L20-C				20	30.0	3.3	241	50 mm–1100: 320	

* This data is for an acceleration/deceleration of 0.3 G.
* For wall mounting, the payload is the same as for horizontal installation.

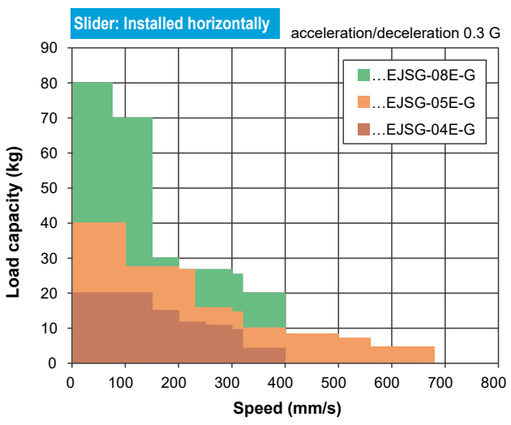

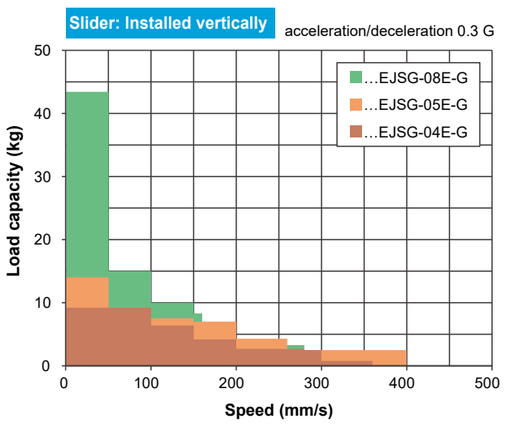

Electric Actuator Slider Type Low Dust Emission Specification

EJSG-04E-C

Inline Motor Mount Type

□35 Stepping Motor

For compatible detailed model numbers, please see our website.

Model No. Notation Method

EJSG - 04 E 06 0300 N B N - V C S03 - C

❶ ❷ ❸ ❹ ❺ ❻ ❼ ❽

Applicable Controller *1
ECMG
ECG

❶Body Size	
04	Body width 44 mm

❷Motor Mounting Direction	
E	Inline Mount

❸Screw Lead	
06	6 mm
12	12 mm

❹Stroke	
0050 to 0800	50 mm (every 50 mm) 800 mm

❺Brake *2	
N	None
B	Yes

❻Encoder	
B	Battery-less Absolute Encoder
C	Incremental Encoder

❼Fitting	
V	Yes

❽Relay Cable *3	
N00	None
S01	Fixed cable 1 m
S03	Fixed cable 3 m
S05	Fixed cable 5 m
S10	Fixed cable 10 m
R01	Flexible cable 1 m
R03	Flexible cable 3 m
R05	Flexible cable 3 m
R10	Flexible cable 3 m

*1 Select the controller from P. 529.
*2 Select "Yes" for vertical use.
*3 For the external dimension drawing of the relay cable, please refer to P. 576.

Specifications

Connected Controller		ECMG		ECG	
Motor		□35 Stepping Motor			
Encoder Type		Battery-less Absolute Encoder/Incremental Encoder			
Drive Method		Ball screw ø10			
Stroke mm		50 to 800			
Screw lead mm		6	12	6	12
Max. Payload kg *1	Horizontal	20.0	15.0	20.0	15.0
	Vertical	9.2	3.3	9.2	3.3
Operating Speed Range *2 mm/s		7 to 360	15 to 720	7 to 260	15 to 400
Max. Acceleration/ Deceleration G	Horizontal	1.0		0.7	
	Vertical	0.5		0.3	
Max. Pushing Force N		155	77	155	77
Pushing Operation Speed Range mm/s		5 to 20		5 to 20	
Repeatability mm		±0.01			
Lost Motion mm		0.1 or less			
Static Allowable Moment N·m		MP: 62 MY: 62 MR: 92			
Motor Power Supply Voltage		24 VDC ±10%			
Brake	Type, Power Supply Voltage	Non-excitation operating type, 24 VDC ±10%			
	Power Consumption W	6.1			
	Holding Force N	140	70	140	70
Insulation Resistance		10 MΩ, 500 VDC			
Dielectric Strength		500 VAC for 1 minute			
Operating Ambient Temperature, Humidity		10°C to 40°C (no freezing) 35 to 80% RH (no condensation)			
Storage Ambient Temperature, Humidity		-10°C to 50°C (no freezing) 35 to 80% RH (no condensation)			
Atmosphere		No corrosive gas, explosive gas, or dust			
Protection Structure		IP20			

*1 Payload varies depending on acceleration/deceleration and speed. For details, see P. 73.
*2 Maximum speed may decrease depending on conditions.

Stroke and Max. Speed

[Connected Controller: ECMG]

(mm/s)

Screw Lead (mm)	Stroke (mm) 50 to 500	550	600	650	700	750	800
6	360	340	290	250	220	190	170
12	720	680	580	500	440	390	340

[Connected Controller: ECG]

(mm/s)

Screw Lead (mm)	Stroke (mm) 50 to 600	650	700	750	800
6	260	250	220	190	170
12	400			390	340

Speed and Payload

[Horizontal Installation]

[Connected Controller: ECMG]

(kg)

	Acceleration/Deceleration (G)							
	0.3		0.5		0.7		1.0	
Speed (mm/s)	Screw Lead (mm) 6	12	6	12	6	12	6	12
7	20.0		20.0		20.0		16.7	
15	20.0	15.0	20.0	15.0	20.0	14.2	16.7	5.4
100	20.0	15.0	20.0	15.0	20.0	14.2	16.7	5.4
150	20.0	15.0	20.0	10.0	18.3	8.3	15.0	5.4
200	20.0	15.0	20.0	10.0	15.0	8.3	14.2	5.4
300	20.0	15.0	20.0	10.0	15.0	8.3	12.1	5.4
350	20.0	15.0	20.0	10.0	13.3	8.3	12.1	5.4
360	20.0	15.0	20.0	10.0	13.3	8.3	9.2	5.4
500		12.9		10.0		8.3		5.4
600		11.7		9.2		7.5		5.4
700		11.7		8.3		5.8		5.4
720		5.8		5.8		5.8		2.5

[Connected Controller: ECG]

(kg)

	Acceleration/Deceleration (G)	
	0.3	0.7
Speed (mm/s)	Screw Lead (mm) 6	12	6	12
7	20.0		20.0	
15	20.0	15.0	20.0	11.0
50	20.0	15.0	20.0	11.0
100	20.0	15.0	20.0	11.0
150	20.0	15.0	12.5	10.8
200	15.0	15.0	12.5	10.8
250	11.7	10.8	11.7	8.3
260	10.9	10.8	10.9	8.3
300		10.8		8.3
320		9.5		7.5
400		4.2		4.2

[Vertical Installation]

[Connected Controller: ECMG]

(kg)

	Acceleration/Deceleration (G)			
	0.3		0.5	
Speed (mm/s)	Screw Lead (mm) 6	12	6	12
7	9.2		9.2	
15	9.2	3.3	9.2	3.3
200	9.2	3.3	9.2	3.3
250	7.1	3.3	6.7	3.3
300	5.4	3.3	4.2	3.3
350	2.5	3.3	1.7	3.3
360	1.7	3.3		3.3
500		3.3		3.3
600		2.5		2.5
720		0.8		0.8

[Connected Controller: ECG]

(kg)

	Acceleration/Deceleration (G)
	0.3
Speed (mm/s)	Screw Lead (mm) 6	12
7	9.2	
15	9.2	3.3
50	9.2	3.3
100	9.2	3.3
150	6.7	3.3
180	5.2	3.3
200	4.2	3.3
220	2.2	2.7
280		2.7
300		2.5
350		0.8
360		0.8

Pushing Force

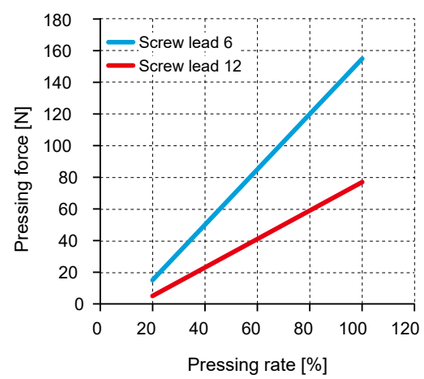

* The pushing force above is a reference value. It may vary depending on conditions such as pushing speed.

External Dimension Drawing

For actuator dimensions, please refer to P. 18.
For the dimensions of the fitting, please refer to P. 84.

Electric Actuator Slider Type Low Dust Emission Specification

EJSG-04□-C

Reverse Parallel Motor Mount Type

□35 Stepping Motor

For compatible detailed model numbers, please see our website.

Model No. Notation Method

EJSG - 04 R 06 0300 N B N - V C S03 - C

❶ ❷ ❸ ❹ ❺ ❻ ❼ ❽

Applicable Controller *1
ECMG
ECG

❶Body Size	
04	Body width 44 mm

❷Motor Mounting Direction *2 *3	
R	Right Side Return Mount
D	Bottom Side Return Mount
L	Left-Side Reverse Parallel Mount

❸Screw Lead	
06	6 mm
12	12 mm

❹Stroke *2 *3	
0050 to 0800	50 mm (every 50 mm) 800 mm

❺Brake *4	
N	None
B	Yes

❻Encoder	
B	Battery-less Absolute Encoder
C	Incremental Encoder

❼ Fitting *3	
V	Yes

❽Relay Cable *5	
N00	None
S01	Fixed cable 1 m
S03	Fixed cable 3 m
S05	Fixed cable 5 m
S10	Fixed cable 10 m
R01	Flexible cable 1 m
R03	Flexible cable 3 m
R05	Flexible cable 3 m
R10	Flexible cable 3 m

*1 Select the controller from P. 529.
*2 When "D" is selected for the motor mounting direction, the stroke can be selected from "0250 (250 mm)" to "0800 (800 mm)".
*3 When the motor mounting direction is "L", stroke 0050 (50 mm) cannot be selected.
*4 Select "Yes" for vertical use.
*5 For the external dimension drawing of the relay cable, please refer to P. 576.

Specifications

Connected Controller		ECMG		ECG	
Motor		□35 Stepping Motor			
Encoder Type		Battery-less Absolute Encoder/Incremental Encoder			
Drive Method		Ball screw ø10			
Stroke mm		50 to 500			
Screw lead mm		6	12	6	12
Max. Payload kg *1	Horizontal	20.0	15.0	20.0	11.7
	Vertical	9.2	3.3	9.2	3.3
Operating Speed Range *2 mm/s		7 to 300	15 to 480	7 to 200	15 to 320
Max. Acceleration/ Deceleration G	Horizontal	1.0		0.7	
	Vertical	0.5		0.3	
Max. Pushing Force N		155	77	155	77
Pushing Operation Speed Range mm/s		5 to 20		5 to 20	
Repeatability mm		±0.01			
Lost Motion mm		0.1 or less			
Static Allowable Moment N·m		MP: 62 MY: 62 MR: 92			
Motor Power Supply Voltage		24 VDC ±10%			
Brake	Type, Power Supply Voltage	Non-excitation operating type, 24 VDC ±10%			
	Power Consumption W	6.1			
	Holding Force N	140	70	140	70
Insulation Resistance		10 MΩ, 500 VDC			
Dielectric Strength		500 VAC for 1 minute			
Operating Ambient Temperature, Humidity		10°C to 40°C (no freezing) 35 to 80% RH (no condensation)			
Storage Ambient Temperature, Humidity		-10°C to 50°C (no freezing) 35 to 80% RH (no condensation)			
Atmosphere		No corrosive gas, explosive gas, or dust			
Protection Structure		IP20			

*1 Payload varies depending on acceleration/deceleration and speed. For details, see P. 75.
*2 Maximum speed may decrease depending on conditions.

Stroke and Max. Speed

[Connected Controller: ECMG] (mm/s)

Screw Lead (mm)	Stroke (mm)					
	50 to 550	600	650	700	750	800
6	300	290	250	220	190	170
12	480			440	390	340

[Connected Controller: ECG] (mm/s)

Screw Lead (mm)	Stroke (mm)		
	50 to 700	750	800
6	200	190	170
12	320		

Speed and Payload

[Horizontal Installation]

[Connected Controller: ECMG] (kg)

Speed (mm/s)	Acceleration/Deceleration (G) 0.3		0.5		0.7		1.0	
	Screw Lead (mm) 6	12	6	12	6	12	6	12
7	20.0		20.0		20.0		16.7	
15	20.0	15.0	20.0	15.0	20.0	14.2	16.7	5.4
100	20.0	15.0	20.0	15.0	20.0	14.2	16.7	5.4
150	20.0	15.0	20.0	10.0	18.3	8.3	15.0	5.4
200	20.0	15.0	20.0	10.0	15.0	8.3	14.2	5.4
250	20.0	15.0	20.0	10.0	15.0	8.3	12.1	5.4
300	20.0	15.0	20.0	10.0	15.0	8.3	11.7	5.4
400		15.0		10.0		8.3		5.4
480		11.7		10.0		8.3		5.4

Connected Controller: ECG] (kg)

Speed (mm/s)	Acceleration/Deceleration (G) 0.3		0.7	
	Screw Lead (mm) 6	12	6	12
7	20.0		20.0	
15	20.0	11.7	20.0	10.0
50	20.0	11.7	20.0	10.0
100	20.0	11.7	20.0	10.0
150	13.3	11.7	11.7	10.0
200	13.3	11.7	10.0	10.0
300		8.3		8.3
320		7.3		7.3

[Vertical Installation]

[Connected Controller: ECMG] (kg)

Speed (mm/s)	Acceleration/Deceleration (G) 0.3		0.5	
	Screw Lead (mm) 6	12	6	12
7	9.2		9.2	
15	9.2	3.3	9.2	3.3
150	9.2	3.3	9.2	3.3
200	8.3	3.3	8.3	3.3
250	5.8	3.3	5.8	3.3
300	4.6	3.3	4.2	3.3
350		3.3		3.3
375		3.3		3.3
450		2.1		2.1
480		0.8		0.8

Connected Controller: ECG (kg)

Speed (mm/s)	Acceleration/Deceleration (G) 0.3	
	Screw Lead (mm) 6	12
7	9.2	
15	9.2	3.3
50	9.2	3.3
100	6.7	3.3
150	3.3	3.3
180	2.8	3.3
200		3.3
280		2.0

Pushing Force

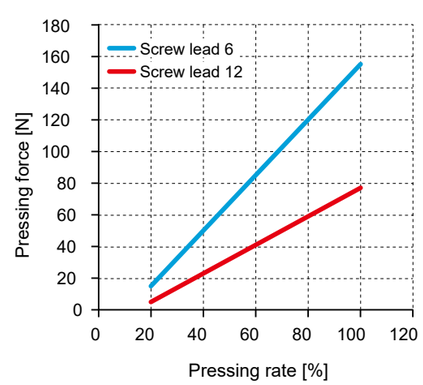

* The pushing force above is a reference value. It may vary depending on conditions such as pushing speed.

External Dimension Drawing

For actuator dimensions, please refer to P. 22 to 24.
For the dimensions of the fitting, please refer to P. 84.

Electric Actuator Slider Type Low Dust Emission Specification

EJSG-05E-C

Inline Motor Mount Type

□42 Stepping Motor

For compatible detailed model numbers, please see our website.

Model No. Notation Method

EJSG - 05 E 05 0300 N B N - V C S03 - C

❶ ❷ ❸ ❹ ❺ ❻ ❼ ❽

Applicable Controller *1
ECMG
ECG

❶Body Size	
05	Body width 54 mm

❷Motor Mounting Direction	
E	Inline Mount

❸Screw Lead	
05	5 mm
10	10 mm
20	20 mm

❹Stroke	
0050 to 0800	50 mm (every 50 mm) 800 mm

❺Brake *2	
N	None
B	Yes

❻Encoder	
B	Battery-less Absolute Encoder
C	Incremental Encoder

❼Fitting	
V	Yes

❽Relay Cable *3	
N00	None
S01	Fixed cable 1 m
S03	Fixed cable 3 m
S05	Fixed cable 5 m
S10	Fixed cable 10 m
R01	Flexible cable 1 m
R03	Flexible cable 3 m
R05	Flexible cable 3 m
R10	Flexible cable 3 m

*1 Select the controller from P. 529.
*2 Select "Yes" for vertical use.
*3 For the external dimension drawing of the relay cable, please refer to P. 576.

Specifications

Connected Controller		ECMG			ECG		
Motor		□42 Stepping Motor					
Encoder Type		Battery-less Absolute Encoder/Incremental Encoder					
Drive Method		Ball screw ø12					
Stroke mm		50 to 800					
Screw lead mm		5	10	20	5	10	20
Max. Payload kg *1	Horizontal	40.0	27.5	18.3	40.0	27.5	18.3
	Vertical	14.2	7.1	2.5	14.0	7.0	2.5
Operating Speed Range *2 mm/s		6 to 300	12 to 600	25 to 895	6 to 230	12 to 400	25 to 680
Max. Acceleration/ Deceleration G	Horizontal	1.0			0.7		
	Vertical	0.5			0.3		
Max. Pushing Force N		220	110	55	220	110	55
Pushing Operation Speed Range mm/s		5 to 20			5 to 20		
Repeatability mm		±0.01					
Lost Motion mm		0.1 or less					
Static Allowable Moment N·m		MP: 103 MY: 103 MR: 144					
Motor Power Supply Voltage		24 VDC ±10%					
Brake	Type, Power Supply Voltage	Non-excitation operating type, 24 VDC ±10%					
	Power Consumption W	6.1					
	Holding Force N	168	84	42	168	84	42
Insulation Resistance		10 MΩ, 500 VDC					
Dielectric Strength		500 VAC for 1 minute					
Operating Ambient Temperature, Humidity		10°C to 40°C (no freezing) 35 to 80% RH (no condensation)					
Storage Ambient Temperature, Humidity		-10°C to 50°C (no freezing) 35 to 80% RH (no condensation)					
Atmosphere		No corrosive gas, explosive gas, or dust					
Protection Structure		IP20					

*1 Payload varies depending on acceleration/deceleration and speed. For details, see P. 77.
*2 Maximum speed may decrease depending on conditions.

Stroke and Max. Speed

[Connected Controller: ECMG]

(mm/s)

Screw Lead (mm)	Stroke (mm)					
	50 to 550	600	650	700	750	800
5	300	260	225	200	175	150
10	600	525	455	400	355	315
20	895			800	710	630

[Connected Controller: ECG]

(mm/s)

Screw Lead (mm)	Stroke (mm)				
	50 to 600	650	700	750	800
5	230	225	200	175	150
10	400			355	315
20	680				630

Speed and Payload

[Horizontal Installation]

[Connected Controller: ECMG]

(kg)

Speed (mm/s)	Acceleration/Deceleration (G) 0.3			0.5			0.7			1.0		
	Screw lead (mm) 5	10	20	5	10	20	5	10	20	5	10	20
6	40.0			40.0			40.0			40.0		
12	40.0	27.5		40.0	25.0		40.0	23.3		40.0	22.9	
25	40.0	27.5	18.3	40.0	25.0	11.7	40.0	23.3	10.0	40.0	22.9	8.3
100	40.0	27.5	18.3	40.0	25.0	11.7	40.0	23.3	10.0	40.0	22.9	8.3
200	40.0	27.5	18.3	40.0	25.0	11.7	40.0	18.3	10.0	30.4	14.2	6.7
250	40.0	27.5	15.0	40.0	25.0	11.7	33.3	18.3	8.3	20.4	12.9	6.3
300	40.0	27.5	15.0	40.0	25.0	11.7	24.2	18.3	8.3	13.8	12.9	6.3
400		27.5	15.0		25.0	11.7		18.3	8.3		12.9	6.3
500		20.4	13.3		20.4	10.0		18.3	8.3		10.8	6.3
600		15.0	13.3		15.0	10.0		15.0	8.3		6.3	6.3
700			11.3		6.7	8.3			6.7			5.0
800			11.3			7.5			6.7			4.2
895			10.0			7.5			6.7			4.2

[Connected Controller: ECG]

(kg)

Speed (mm/s)	Acceleration/Deceleration (G) 0.3			0.7		
	Screw lead (mm) 5	10	20	5	10	20
6	40.0			40.0		
12	40.0	27.5		40.0	27.5	
25	40.0	27.5	18.3	40.0	27.5	8.3
50	40.0	27.5	18.3	40.0	27.5	8.3
100	40.0	27.5	18.3	40.0	27.5	8.3
150	26.7	27.5	10.0	26.7	27.5	6.7
200	26.7	27.5	10.0	26.7	27.5	6.7
230	26.7	15.8	10.0	26.7	12.5	6.7
300		15.8	10.0		12.5	6.7
320		14.6	8.3		11.8	5.0
400		10.0	8.3		9.2	5.0
500			8.3			5.0
560			7.1			4.3
680			4.6			2.8

[Vertical Installation]

[Connected Controller: ECMG]

(kg)

Speed (mm/s)	Acceleration/Deceleration (G) 0.3			0.5		
	Screw lead (mm) 5	10	20	5	10	20
6	14.2			14.2		
12	14.2	7.1		14.2	7.1	
25	14.2	7.1	2.5	14.2	7.1	2.5
100	14.2	7.1	2.5	14.2	7.1	2.5
150	13.3	7.1	2.5	13.3	7.1	2.5
250	10.0	7.1	2.5	10.0	7.1	2.5
300	6.3	7.1	2.5	6.3	7.1	2.5
350		4.6	2.5		3.8	2.5
375		4.6	2.5		3.8	2.5
400		4.6	2.5		3.8	2.5
500		2.5	1.3		1.7	1.3
600		1.7	1.3		0.8	1.3
650			1.3			1.3
800			1.3			1.3
895			0.8			0.8

[Connected Controller: ECG]

(kg)

Speed (mm/s)	Acceleration/ Deceleration (G) 0.3		
	Screw lead (mm) 5	10	20
6	14.0		
12	14.0	7.0	
25	14.0	7.0	2.5
50	14.0	7.0	2.5
100	9.2	7.0	2.5
150	7.5	7.0	2.5
170	6.2	7.0	2.5
200	4.2	7.0	2.5
260		4.3	2.5
300		2.5	2.5
325		2.1	2.5
340		2.1	2.5
400			2.5

Pushing Force

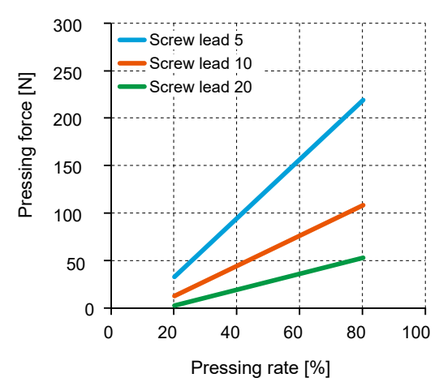

* The pushing force above is a reference value. It may vary depending on conditions such as pushing speed.

External Dimension Drawing

For actuator dimensions, please refer to P. 28.
For the dimensions of the fitting, please refer to P. 84.

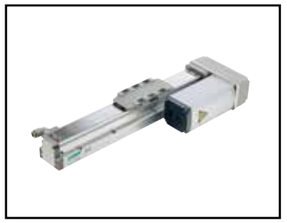

Electric Actuator Slider Type Low Dust Emission Specification

EJSG-05□-C

Reverse Parallel Motor Mount Type

□42 Stepping Motor

For compatible detailed model numbers, please see our website.

Model No. Notation Method

EJSG - 05 R 05 0300 N B N - V C S03 - C

❶ ❷ ❸ ❹ ❺ ❻ ❼ ❽

Applicable Controller *1
ECMG
ECG

❶Body Size	
05	Body width 54 mm

❷Motor Mounting Direction *2 *3	
R	Right Side Return Mount
D	Bottom Side Return Mount
L	Left-Side Reverse Parallel Mount

❸Screw Lead	
05	5 mm
10	10 mm
20	20 mm

❹Stroke *2 *3	
0050 to 0800	50 mm (every 50 mm) 800 mm

❺Brake *4	
N	None
B	Yes

❻Encoder	
B	Battery-less Absolute Encoder
C	Incremental Encoder

❼ Fitting *3	
V	Yes

❽Relay Cable *5	
N00	None
S01	Fixed cable 1 m
S03	Fixed cable 3 m
S05	Fixed cable 5 m
S10	Fixed cable 10 m
R01	Flexible cable 1 m
R03	Flexible cable 3 m
R05	Flexible cable 3 m
R10	Flexible cable 3 m

*1 Select the controller from P. 529.
*2 When "D" is selected for the motor mounting direction, the stroke can be selected from "0250 (250 mm)" to "0800 (800 mm)".
*3 When the motor mounting direction is "L", stroke 0050 (50 mm) cannot be selected.
*4 Select "Yes" for vertical use.
*5 For the external dimension drawing of the relay cable, please refer to P. 576.

Specifications

Connected Controller		ECMG			ECG		
Motor		□42 Stepping Motor					
Encoder Type		Battery-less Absolute Encoder/Incremental Encoder					
Drive Method		Ball screw ø12					
Stroke mm		50 to 800					
Screw lead mm		5	10	20	5	10	20
Max. Payload kg *1	Horizontal	40.0	27.5	18.3	40.0	27.5	18.3
	Vertical	10.0	3.3	0.8	10.0	3.3	0.8
Operating Speed Range *2 mm/s		6 to 280	12 to 505	25 to 895	6 to 200	12 to 320	25 to 560
Max. Acceleration/ Deceleration G	Horizontal	1.0			0.7		
	Vertical	0.5			0.3		
Max. Pushing Force N		220	110	55	220	110	55
Pushing Operation Speed Range mm/s		5 to 20					
Repeatability mm		±0.01					
Lost Motion mm		0.1 or less					
Static Allowable Moment N·m		MP: 103 MY: 103 MR: 144					
Motor Power Supply Voltage		24 VDC ±10%					
Brake	Type, Power Supply Voltage	Non-excitation operating type, 24 VDC ±10%					
	Power Consumption W	6.1					
	Holding Force N	168	84	42	168	84	42
Insulation Resistance		10 MΩ, 500 VDC					
Dielectric Strength		500 VAC for 1 minute					
Operating Ambient Temperature, Humidity		10°C to 40°C (no freezing) 35 to 80% RH (no condensation)					
Storage Ambient Temperature, Humidity		-10°C to 50°C (no freezing) 35 to 80% RH (no condensation)					
Atmosphere		No corrosive gas, explosive gas, or dust					
Protection Structure		IP20					

*1 Payload varies depending on acceleration/deceleration and speed. For details, see P. 79.
*2 Maximum speed may decrease depending on conditions.

Stroke and Max. Speed

[Connected Controller: ECMG] (mm/s)

Screw Lead (mm)	Stroke (mm)					
	50 to 550	600	650	700	750	800
5	280	260	225	200	175	150
10	505		455	400	355	315
20	895			800	710	630

[Connected Controller: ECG] (mm/s)

Screw Lead (mm)	Stroke (mm)		
	50 to 700	750	800
5	200	175	150
10	320		315
20	560		

Speed and Payload

[Horizontal Installation]

[Connected Controller: ECMG] (kg)

Speed (mm/s)	Acceleration/Deceleration (G) 0.3			0.5			0.7			1.0		
	Screw lead (mm) 5	10	20	5	10	20	5	10	20	5	10	20
6	40.0			40.0			40.0			40.0		
12	40.0	27.5		40.0	25.0		40.0	23.3		40.0	22.9	
25	40.0	27.5	18.3	40.0	25.0	11.7	40.0	23.3	10.0	40.0	22.9	8.3
100	40.0	27.5	18.3	40.0	25.0	11.7	40.0	23.3	10.0	40.0	22.9	8.3
150	40.0	27.5	15.0	40.0	20.0	11.7	40.0	18.3	10.0	23.3	14.2	6.7
200	40.0	27.5	15.0	40.0	20.0	11.7	32.5	18.3	10.0	18.3	14.2	6.7
250	40.0	27.5	15.0	40.0	20.0	11.7	25.8	18.3	8.3	13.3	12.9	6.3
280	19.2	27.5	15.0	19.2	20.0	11.7	19.2	18.3	8.3		12.9	6.3
300		27.5	15.0		20.0	11.7		18.3	8.3		12.9	6.3
325		27.5	15.0		20.0	11.7		18.3	8.3		12.9	6.3
400		27.5	15.0		20.0	11.7		18.3	8.3		12.9	6.3
500		20.4	13.3		17.5	10.0		15.0	8.3		10.8	6.3
505		15.0	13.3		13.3	10.0		13.3	8.3		6.3	6.3
600			13.3			10.0			8.3			6.3
635			11.3			8.3			6.7			5.0
700			11.3			8.3			6.7			5.0
800			11.3			7.5			6.7			4.2
895			10.0			7.5			6.7			4.2

[Connected Controller: ECG] (kg)

Speed (mm/s)	Acceleration/Deceleration (G) 0.3			0.7		
	Screw lead (mm) 5	10	20	5	10	20
6	40.0			40.0		
12	40.0	27.5		40.0	27.5	
25	40.0	27.5	18.3	40.0	27.5	7.5
50	40.0	27.5	18.3	40.0	27.5	7.5
100	40.0	27.5	18.3	40.0	27.5	7.5
150	26.7	23.3	10.0	26.7	20.0	5.0
200	26.7	23.3	10.0	26.7	20.0	5.0
300		11.7	10.0		11.7	5.0
320		10.0	6.7		10.0	4.2
500			6.7			4.2
560			5.7			3.5

[Vertical Installation]

[Connected Controller: ECMG] (kg)

Speed (mm/s)	Acceleration/Deceleration (G) 0.3			0.5		
	Screw lead (mm) 5	10	20	5	10	20
6	10.0			10.0		
12	10.0	3.3		10.0	3.3	
25	10.0	3.3	0.8	10.0	3.3	0.8
200	10.0	3.3	0.8	10.0	3.3	0.8
250	7.5	3.3	0.8	5.8	3.3	0.8
280	3.8	3.3	0.8	1.7	3.3	0.8
300		3.3	0.8		3.3	0.8
325		3.3	0.8		2.9	0.8
400		3.3	0.8		2.9	0.8
500		2.5	0.8		1.7	0.8
505		0.8	0.8		0.8	0.8
895			0.8			0.8

[Connected Controller: ECG] (kg)

Speed (mm/s)	Acceleration/ Deceleration (G) 0.3		
	Screw lead (mm) 5	10	20
6	10.0		
12	10.0	3.3	
25	10.0	3.3	0.8
50	10.0	3.3	0.8
100	8.3	3.3	0.8
150	6.7	2.1	0.8
170	5.0	2.1	0.8
200		2.1	0.8
260		1.6	0.8
400			0.8

Pushing Force

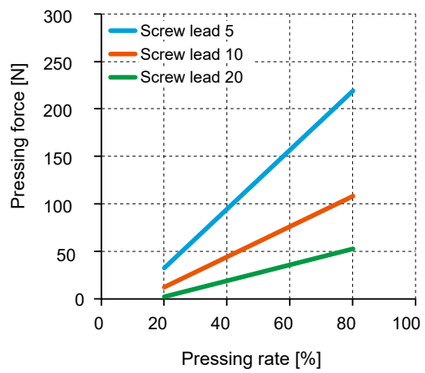

* The pushing force above is a reference value. It may vary depending on conditions such as pushing speed.

External Dimension Drawing

For actuator dimensions, please refer to P. 32 to 34.
For the dimensions of the fitting, please refer to P. 84.

Electric Actuator Slider Type Low Dust Emission Specification

EJSG-08E-C

Inline Motor Mount Type

□56 Stepping Motor

For compatible detailed model numbers, please see our website.

Model No. Notation Method

EJSG - 08 E 05 0300 N B N - V C S03 - C

❶ ❷ ❸ ❹ ❺ ❻ ❼ ❽

Applicable Controller *1
ECMG
ECG

❶Body Size	
08	Body width 82 mm

❷Motor Mounting Direction	
E	Inline Mount

❸Screw Lead	
05	5 mm
10	10 mm
20	20 mm

❹Stroke	
0050 to 1100	50 mm (every 50 mm) 1100 mm

❺Brake *2	
N	None
B	Yes

❻Encoder	
B	Battery-less Absolute Encoder
C	Incremental Encoder

❼Fitting	
V	Yes

❽Relay Cable *3	
N00	None
S01	Fixed cable 1 m
S03	Fixed cable 3 m
S05	Fixed cable 5 m
S10	Fixed cable 10 m
R01	Flexible cable 1 m
R03	Flexible cable 3 m
R05	Flexible cable 3 m
R10	Flexible cable 3 m

*1 Select the controller from P. 529.
*2 Select "Yes" for vertical use.
*3 For the external dimension drawing of the relay cable, please refer to P. 576.

Specifications

Connected Controller		ECMG			ECG		
Motor		□56 Stepping Motor					
Encoder Type		Battery-less Absolute Encoder/Incremental Encoder					
Drive Method		Ball screw ø16					
Stroke mm		50 to 1100					
Screw lead mm		5	10	20	5	10	20
Max. Payload kg *1	Horizontal	80.0	70.0	30.0	80.0	70.0	30.0
	Vertical	43.3	28.3	3.3	43.3	28.3	3.3
Operating Speed Range *2 mm/s		6 to 180	12 to 340	25 to 640	6 to 120	12 to 200	25 to 400
Max. Acceleration/ Deceleration G	Horizontal	1.0			0.7		
	Vertical	0.5			0.3		
Max. Pushing Force N		965	482	241	965	482	241
Pushing Operation Speed Range mm/s		5 to 20			5 to 20		
Repeatability mm		±0.01					
Lost Motion mm		0.1 or less					
Static Allowable Moment N·m		MP: 203 MY: 203 MR: 336					
Motor Power Supply Voltage		24 VDC ±10%					
Brake	Type, Power Supply Voltage	Non-excitation operating type, 24 VDC ±10%					
	Power Consumption W	7.2					
	Holding Force N	768	384	192	768	384	192
Insulation Resistance		10 MΩ, 500 VDC					
Dielectric Strength		500 VAC for 1 minute					
Operating Ambient Temperature, Humidity		10°C to 40°C (no freezing) 35 to 80% RH (no condensation)					
Storage Ambient Temperature, Humidity		-10°C to 50°C (no freezing) 35 to 80% RH (no condensation)					
Atmosphere		No corrosive gas, explosive gas, or dust					
Protection Structure		IP20					

*1 Payload varies depending on acceleration/deceleration and speed. For details, see P. 81.
*2 Maximum speed may decrease depending on conditions.

Stroke and Max. Speed

[Connected Controller: ECMG]

(mm/s)

Screw Lead (mm)	Stroke (mm)						
	50 to 800	850	900	950	1,000	1050	1100
5	180	175	160	145	130	120	110
10	340		320	290	260	240	220
20	640			580	530	480	440

[Connected Controller: ECG]

(mm/s)

Screw Lead (mm)	Stroke (mm)	
	50 to 1050	1100
5	120	110
10	200	
20	400	

Speed and Payload

[Horizontal Installation]

[Connected Controller: ECMG]

(kg)

Speed (mm/s)	Acceleration/Deceleration (G)											
	0.3			0.5			0.7			1.0		
	Screw lead (mm)											
	5	10	20	5	10	20	5	10	20	5	10	20
6	80.0			80.0			80.0			80.0		
12	80.0	70.0		80.0	70.0		80.0	70.0		80.0	70.0	
25	80.0	70.0	30.0	80.0	70.0	30.0	80.0	70.0	30.0	80.0	70.0	30.0
100	80.0	70.0	30.0	80.0	70.0	30.0	80.0	70.0	30.0	80.0	70.0	30.0
150	80.0	70.0	30.0	80.0	70.0	30.0	80.0	70.0	26.7	50.0	70.0	26.7
180	80.0	70.0	30.0	80.0	70.0	30.0	80.0	70.0	26.7	18.3	40.0	26.7
200		70.0	30.0		70.0	30.0		70.0	26.7		40.0	26.7
230		70.0	30.0		70.0	26.7		43.3	26.7		40.0	24.2
250		70.0	30.0		70.0	26.7		43.3	26.7		40.0	24.2
300		70.0	30.0		61.7	26.7		43.3	26.7		15.0	24.2
340		43.3	30.0		43.3	26.7		43.3	26.7		3.8	24.2
400			30.0			26.7			26.7			24.2
430			30.0			26.7			26.7			16.7
500			30.0			26.7			26.7			16.7
600			22.9			22.5			22.5			13.8
640			22.5			22.5			22.5			12.5

[Connected Controller: ECG]

(kg)

Speed (mm/s)	Acceleration/Deceleration (G)					
	0.3			0.7		
	Screw lead (mm)					
	5	10	20	5	10	20
6	80.0			80.0		
12	80.0	70.0		80.0	70.0	
25	80.0	70.0	30.0	80.0	70.0	26.7
50	80.0	70.0	30.0	80.0	70.0	26.7
75	80.0	70.0	30.0	80.0	70.0	26.7
100	40.0	70.0	30.0	40.0	70.0	26.7
120	40.0	70.0	30.0	40.0	70.0	18.3
150		70.0	30.0		70.0	18.3
200		28.3	30.0		17.5	18.3
300			26.7			18.3
320			25.4			17.0
400			20.0			

[Vertical Installation]

[Connected Controller: ECMG]

(kg)

Speed (mm/s)	Acceleration/Deceleration (G)					
	0.3			0.5		
	Screw lead (mm)					
	5	10	20	5	10	20
6	43.3			43.3		
12	43.3	28.3		43.3	28.3	
25	43.3	28.3	3.3	43.3	28.3	3.3
50	43.3	28.3	3.3	43.3	28.3	3.3
100	16.7	24.2	3.3	16.7	12.1	3.3
150	16.7	22.5	3.3	16.7	12.1	3.3
180	5.0	14.2	3.3	5.0	12.1	3.3
200		14.2	3.3		12.1	3.3
230		13.3	3.3		12.1	3.3
250		13.3	3.3		12.1	3.3
300		5.4	3.3		2.1	3.3
340		5.4	3.3		2.1	3.3
400			3.3			3.3
500			3.3			3.3
600			2.5			2.5
640			0.8			0.8

[Connected Controller: ECG]

(kg)

Speed (mm/s)	Acceleration/ Deceleration (G)		
	0.3		
	Screw lead (mm)		
	5	10	20
6	43.3		
12	43.3	28.3	
25	43.3	28.3	3.3
50	43.3	28.3	3.3
75	15.0	12.5	3.3
100	15.0	12.5	3.3
120	5.3	10.0	3.3
150		10.0	3.3
160		8.3	3.3
200		1.7	3.3
280			3.3

Pushing Force

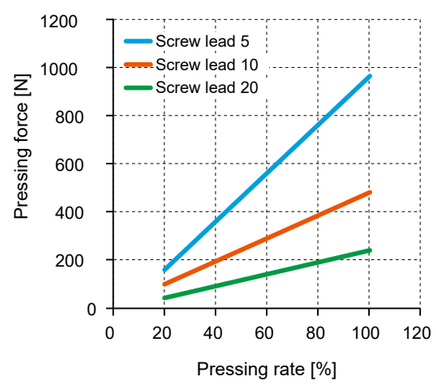

* The pushing force above is a reference value. It may vary depending on conditions such as pushing speed.

External Dimension Drawing

For actuator dimensions, please refer to P. 38.
For the dimensions of the fitting, please refer to P. 84.

Electric Actuator Slider Type Low Dust Emission Specification

EJSG-08□-C

Reverse Parallel Motor Mount Type

□56 Stepping Motor

For compatible detailed model numbers, please see our website.

Model No. Notation Method

EJSG - 08 R 05 0300 N B N - V C S03 - C

❶ ❷ ❸ ❹ ❺ ❻ ❼ ❽

Applicable Controller *1
ECMG
ECG

❶Body Size	
08	Body width 82 mm

❷Motor Mounting Direction *2	
R	Right Side Return Mount
D	Bottom Side Return Mount
L	Left-Side Reverse Parallel Mount

❸Screw Lead	
05	5 mm
10	10 mm
20	20 mm

❹Stroke *2	
0050 to 1100	50 mm (every 50 mm) 1100 mm

❺Brake *3	
N	None
B	Yes

❻Encoder	
B	Battery-less Absolute Encoder
C	Incremental Encoder

❼Fitting	
V	Yes

❽Relay Cable *4	
N00	None
S01	Fixed cable 1 m
S03	Fixed cable 3 m
S05	Fixed cable 5 m
S10	Fixed cable 10 m
R01	Flexible cable 1 m
R03	Flexible cable 3 m
R05	Flexible cable 3 m
R10	Flexible cable 3 m

*1 Select the controller from P. 529.
* 2 When "D" is selected for the motor mounting direction, the stroke can be selected from "0250 (250 mm)" to "1100 (1100 mm)".
*3 Select "Yes" for vertical use.
*4 For the external dimension drawing of the relay cable, please refer to P. 576.

Specifications

Connected Controller		ECMG			ECG		
Motor		□56 Stepping Motor					
Encoder Type		Battery-less Absolute Encoder/Incremental Encoder					
Drive Method		Ball screw ø16					
Stroke mm		50 to 1100					
Screw lead mm		5	10	20	5	10	20
Max. Payload kg *1	Horizontal	80.0	70.0	30.0	80.0	70.0	30.0
	Vertical	33.3	21.7	3.3	33.3	18.3	3.3
Operating Speed Range mm/s		6 to 160	12 to 340	25 to 640	6 to 100	12 to 200	25 to 320
Max. Acceleration/ Deceleration G	Horizontal	1.0			0.7		
	Vertical	0.5			0.3		
Max. Pushing Force N		965	482	241	965	482	241
Pushing Operation Speed Range mm/s		5 to 20			5 to 20		
Repeatability mm		±0.01					
Lost Motion mm		0.1 or less					
Static Allowable Moment N·m		MP: 203 MY: 203 MR: 336					
Motor Power Supply Voltage		24 VDC ±10%					
Brake	Type, Power Supply Voltage	Non-excitation operating type, 24 VDC ±10%					
	Power Consumption W	7.2					
	Holding Force N	768	384	192	768	384	192
Insulation Resistance		10 MΩ, 500 VDC					
Dielectric Strength		500 VAC for 1 minute					
Operating Ambient Temperature, Humidity		10°C to 40°C (no freezing) 35 to 80% RH (no condensation)					
Storage Ambient Temperature, Humidity		-10°C to 50°C (no freezing) 35 to 80% RH (no condensation)					
Atmosphere		No corrosive gas, explosive gas, or dust					
Protection Structure		IP20					

*1 Payload varies depending on acceleration/deceleration and speed. For details, see P. 83.
*2 Maximum speed may decrease depending on conditions.

Stroke and Max. Speed

[Connected Controller: ECMG] (mm/s)

Screw Lead (mm)	Stroke (mm)					
	50 to 850	900	950	1,000	1050	1100
5	160		145	130	120	110
10	340	320	290	260	240	220
20	640		580	530	480	440

[Connected Controller: ECG] (mm/s)

Screw Lead (mm)	Stroke (mm)
	50 to 1100
5	100
10	200
20	320

Speed and Payload

[Horizontal Installation]

[[Connected Controller: ECMG] (kg)

Speed (mm/s)	Acceleration/Deceleration (G) 0.3			0.5			0.7			1.0		
	Screw lead (mm) 5	10	20	5	10	20	5	10	20	5	10	20
6	80.0			80.0			80.0			80.0		
12	80.0	70.0		80.0	70.0		80.0	70.0		80.0	70.0	
25	80.0	70.0	30.0	80.0	70.0	30.0	80.0	70.0	30.0	80.0	70.0	30.0
50	80.0	70.0	30.0	80.0	70.0	30.0	80.0	70.0	30.0	80.0	70.0	30.0
100	80.0	70.0	30.0	80.0	70.0	30.0	80.0	70.0	30.0	40.0	70.0	30.0
150	80.0	70.0	30.0	16.7	70.0	30.0	16.7	70.0	26.7	8.8	70.0	26.7
180	80.0	70.0	30.0	16.7	70.0	30.0	16.7	70.0	26.7		40.0	26.7
200		70.0	30.0		70.0	30.0		70.0	26.7		40.0	26.7
250		70.0	30.0		68.3	26.7		43.3	26.7		40.0	24.2
300		70.0	30.0		61.7	26.7		43.3	26.7		15.0	24.2
340		43.3	30.0		43.3	26.7		40.0	26.7		3.8	16.3
400			30.0			26.7			26.7			16.3
430			30.0			26.7			26.7			15.8
500			30.0			26.7			26.7			15.8
600			16.7			16.7			16.7			9.6
640			16.7			16.7			16.7			9.2

[Connected Controller: ECG] (kg)

Speed (mm/s)	Acceleration/Deceleration (G) 0.3			0.7		
	Screw lead (mm) 5	10	20	5	10	20
6	80.0			80.0		
12	80.0	70.0		80.0	70.0	
25	80.0	70.0	30.0	80.0	70.0	26.7
50	80.0	70.0	30.0	80.0	70.0	26.7
75	68.3	70.0	30.0	68.3	70.0	26.7
100	40.0	70.0	30.0	40.0	70.0	26.7
150		70.0	30.0		30.0	18.3
200		28.3	30.0		17.5	18.3
300			6.7			6.7
320			6.0			6.0

[Vertical Installation]

[Connected Controller: ECMG] (kg)

Speed (mm/s)	Acceleration/Deceleration (G) 0.3			0.5		
	Screw lead (mm) 5	10	20	5	10	20
6	33.3			33.3		
12	33.3	21.7		33.3	21.7	
25	33.3	21.7	3.3	33.3	21.7	3.3
50	33.3	21.7	3.3	33.3	21.7	3.3
100	16.7	21.7	3.3	16.7	12.1	3.3
150	8.3	20.8	3.3	8.3	12.1	3.3
160	3.3	12.5	3.3	3.3	12.1	3.3
200		12.5	3.3		12.1	3.3
230		12.1	3.3		11.7	3.3
250		12.1	3.3		11.7	3.3
300		5.4	3.3		2.1	3.3
340		5.0	3.3		2.1	3.3
350			3.3			3.3
400			3.3			3.3
500			3.3			3.3
600			1.7			1.7

[Connected Controller: ECG] (kg)

Speed (mm/s)	Acceleration/ Deceleration (G) 0.3		
	Screw lead (mm) 5	10	20
6	33.3		
12	33.3	18.3	
25	33.3	18.3	3.3
50	25.0	18.3	3.3
75	15.0	12.5	3.3
100	12.5	12.5	3.3
150		8.3	3.3
160		7.0	3.3
200			3.3
280			3.3

Pushing Force

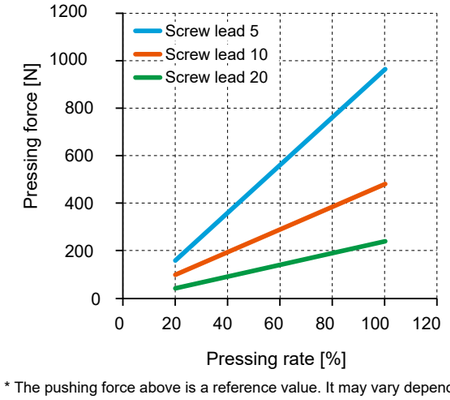

* The pushing force above is a reference value. It may vary depending on conditions such as pushing speed.

External Dimension Drawing

For actuator dimensions, please refer to P. 42 to 44.
For the dimensions of the fitting, please refer to P. 84.

External Dimension Drawing

● EJSG-04-V-C (Fitting part)

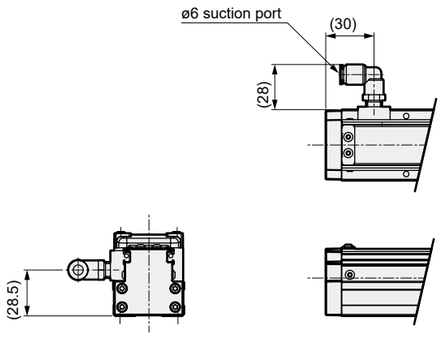

*For actuator dimensions, please refer to P. 18, 22 to 24.
* The fitting is included.

● EJSG-05-V-C (Fitting part)

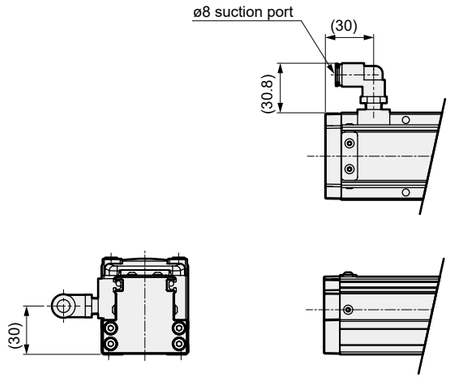

*For actuator dimensions, please refer to P. 28, 32 to 34.
* The fitting is included.

● EJSG-08-V-C (Fitting part)

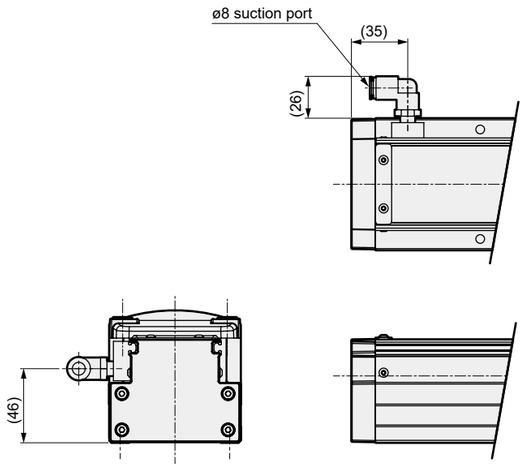

* For actuator dimensions, please refer to P. 38, 42 to 44.
* The fitting is included.

Dust Generation Characteristics Reference Data

Test Circuit

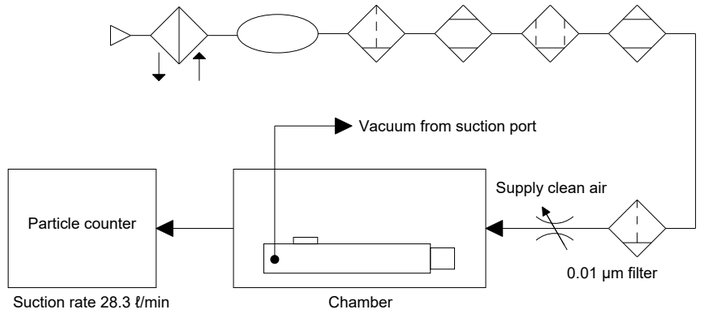

Measurement Conditions

Item		Contents
Test Sample	Model No.	EJSG-04E120500□-□-C
		EJSG-05E200500□-□-C
		EJSG-08E200600□-□-C
	Operating speed	100 mm/sec
	Acceleration/ deceleration time	0.3G
	Suction flow rate	30.0 L/min
Particle counter	Name	Laser dust monitor
	Minimum measurable particle size	0.1 μm
	Suction volume	28.3 L/min
Measurement Conditions	Measurement time	10 min

Measurement Method

① Place the test sample (EJSG-□-C) in the chamber.

② Start vacuum evacuation from the test sample's suction port. Supply the same amount of clean air as the particle counter's suction volume (28.3 L/min).

③ Confirm that the background reading is 0.

④ Operate the test sample and measure the change in particle concentration at the specified cycle.

The data are measured values under the above conditions and are not guaranteed values.

Dust Generation Data

● Operating Speed: 100 mm/sec

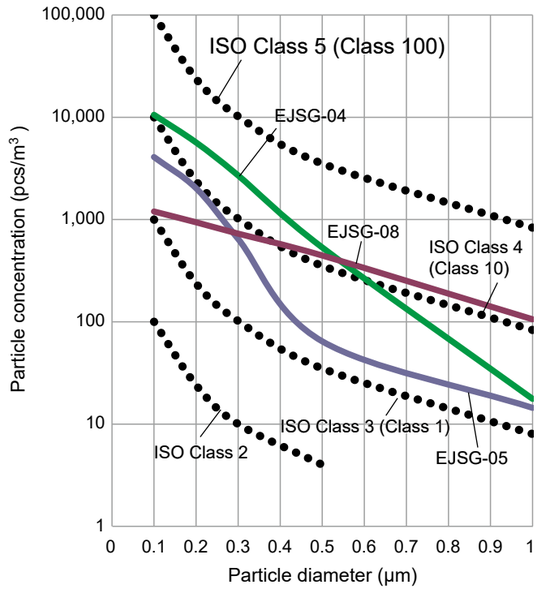

Model Selection/Technical Data

Slider Type
EJSG
EBS

CONTENTS

Model Selection 88
Technical Data 90
Maintenance Parts 94

Model Selection

STEP1 Confirmation of Payload

The payload varies depending on the mounting orientation, screw lead, transport speed, and acceleration/deceleration. Refer to the System Tables (pages 10 to 13, 48 to 51, and 68 to 71), the specification table for each model and the Table of Load Capacity by Speed and Acceleration/Deceleration to select the size and screw lead.

STEP2 Confirmation of Positioning Time

Calculate the positioning time for the selected product according to the example below and check if it meets the required tact time.

Positioning time for general transfer operations

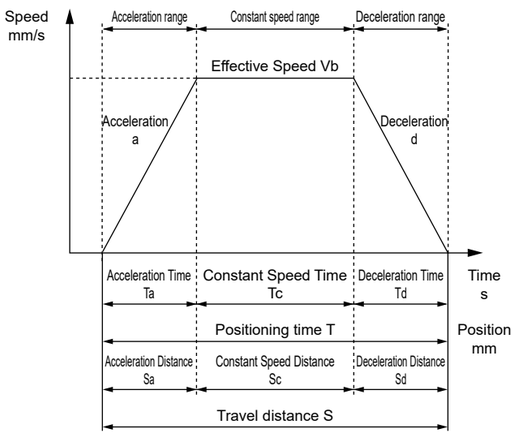

	Contents	Code	Unit	Remarks
Setting Value	Set Speed	V	mm/s	
	Set Acceleration	a	mm/s^2	
	Set Deceleration	d	mm/s^2	
	Travel Distance	S	mm	
Calculated Value	Reached Speed	Vmax	mm/s	$=\{2\times a\times d\times S/(a+d)\}^{1/2}$
	Effective Speed	Vb	mm/s	The smaller of V and Vmax
	Acceleration Time	Ta	s	= Vb / a
	Deceleration Time	Td	s	= Vb / d
	Constant Speed Time	Tc	s	= Sc / Vb
	Acceleration Distance	Sa	mm	$=(a\times Ta^2)/2$
	Deceleration Distance	Sd	mm	$=(d\times Td^2)/2$
	Constant Speed Distance	Sc	mm	= S - (Sa+Sd)
	Positioning Time	T	s	= Ta+Tc+Td

* Do not use at speeds exceeding the specifications.
* Depending on the acceleration/deceleration and stroke, a trapezoidal velocity waveform may not be formed (the set speed may not be reached). In that case, select the smaller of the set speed (V) and the reached speed (Vmax) as the effective speed (Vb).
* Acceleration and deceleration vary depending on the product and usage conditions. For details, please refer to the specifications P. for each model.
* Settling time varies depending on the usage conditions, but it may take about 0.2 s.
* 1G ≈ 9.8 m/s².

Positioning time for pushing operations

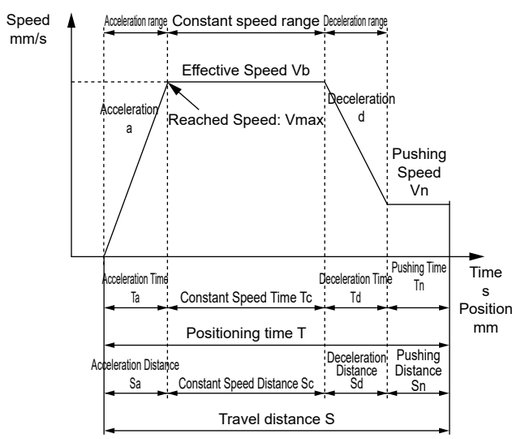

	Contents	Code	Unit	Remarks
Setting Value	Set Speed	V	mm/s	
	Set Acceleration	a	mm/s^2	
	Set Deceleration	d	mm/s^2	
	Travel Distance	S	mm	
	Pushing Speed	Vn	mm/s	
	Pushing Distance	Sn	mm	
Calculated Value	Reached Speed	Vmax	mm/s	$=[2\times a\times d\times(S-Sn+Vn^2/2/d)/(a+d)]^{1/2}$
	Effective Speed	Vb	mm/s	The smaller of V and Vmax
	Acceleration Time	Ta	s	= Vb / a
	Deceleration Time	Td	s	= (Vb - Vn) / d
	Constant Speed Time	Tc	s	= Sc / Vb
	Pushing Time	Tn	s	= Sn / Vn
	Acceleration Distance	Sa	mm	$=(a\times Ta^2)/2$
	Deceleration Distance	Sd	mm	= ((Vb+Vn)×Td) / 2
	Constant Speed Distance	Sc	mm	= S - (Sa+Sd+Sn)
	Positioning Time	T	s	= Ta+Tc+Td+Tn

* Do not use at speeds exceeding the specifications.
* Pushing speed varies depending on the product.
* Depending on the acceleration/deceleration and stroke, a trapezoidal velocity waveform may not be formed (the set speed may not be reached). In that case, select the smaller of the set speed (V) and the reached speed (Vmax) as the effective speed (Vb).
* Acceleration and deceleration vary depending on the product and usage conditions. For details, please refer to the specifications P. for each model.
* Settling time varies depending on the usage conditions, but it may take about 0.2 s.
* 1G ≈ 9.8 m/s².

STEP3 Confirmation of Allowable Overhang Length

Confirm that the overhang length of the load during operation is within the allowable overhang length (P. 90-92).
For details on selection, please contact our sales representative.

Allowable Overhang Length (EJSG Series)

[Horizontal Installation]

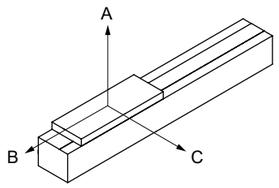

[Allowable Overhang Length]

●EJSG-04E

Motor Mounting	Acceleration/ Deceleration G	Screw Lead	Load Weight kg	Max. Speed mm/s	Overhang mm A	B	C
Straight	0.3	6	10	450	390	70	90
			15	400	270	45	55
			20	400	185	30	40
		12	5	800	480	130	135
			10	700	245	60	65
			15	400	270	45	55
	1.0	6	9	400	205	80	90
			12	350	160	60	70
			16	100	295	60	85
		12	1	850	800	680	615
			3	700	415	230	220
			5	700	230	135	120

●EJSG-05E

Motor Mounting	Acceleration/ Deceleration G	Screw Lead	Load Weight kg	Max. Speed mm/s	Overhang mm A	B	C
Straight	0.3	5	20	375	345	55	65
			30	350	220	30	40
			40	350	140	20	25
		10	6	700	745	180	195
			15	600	300	65	75
			27	400	215	35	40
		20	6	1100	495	160	145
			13	600	355	80	90
			18	200	735	70	95
	1.0	5	20	250	205	55	70
			30	200	160	35	45
			40	100	125	30	45
		10	10	500	240	110	115
			15	100	560	105	145
			20	100	385	75	105
		20	2	1,000	730	510	405
			5	700	385	220	200
			8	100	1,000	205	285

●EJSG-08E

Motor Mounting	Acceleration/ Deceleration G	Screw Lead	Load Weight kg	Max. Speed mm/s	Overhang mm A	B	C
Straight	0.3	5	40	200	1,000	95	155
			60	200	635	60	95
			80	200	450	40	65
		10	30	400	715	115	165
			50	300	515	65	100
			70	300	340	40	65
		20	10	700	1,000	335	420
			20	700	645	160	195
			30	500	575	110	150
	1.0	5	40	150	580	105	165
			60	100	370	70	115
			80	100	235	50	80
		10	30	250	465	125	180
			50	150	450	80	130
			70	150	295	55	85
		20	10	700	600	335	340
			20	400	480	180	235
			30	100	915	160	260

* Value when the actuator's running life is 5,000 km.
* The load in the overhang direction is in a single direction only.
* Dimensions A, B, and C are from the center of the top surface of the table.
  Controller For ECMG, Stroke: 350 mm, the value is the maximum speed for each payload.
* The value may differ depending on the motor mounting direction.
* For acceleration/deceleration and payload, please refer to the payload table by speed and acceleration/deceleration (specifications P. for each model).

Allowable Overhang Length (EJSG Series)

[When Wall-Mounted]

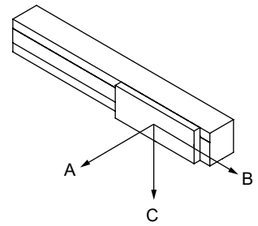

[Allowable Overhang Length]

●EJSG-04E

Motor Mounting	Acceleration/ Deceleration G	Screw Lead	Load Weight kg	Max. Speed mm/s	Overhang mm A	B	C
Straight	0.3	6	5	450	160	120	760
			10	450	55	40	290
			15	400	20	15	155
		12	5	800	105	95	390
			10	700	35	30	145
			15	400	20	15	155
	1.0	6	9	400	60	50	170
			12	350	40	30	125
			16	100	45	30	325
		12	1	850	595	645	800
			3	700	200	200	385
			5	700	100	100	200

●EJSG-05E

Motor Mounting	Acceleration/ Deceleration G	Screw Lead	Load Weight kg	Max. Speed mm/s	Overhang mm A	B	C
Straight	0.3	5	5	375	280	215	1,000
			10	375	110	85	650
			20	375	25	15	190
		10	6	700	160	140	630
			10	600	80	70	370
			15	600	35	30	170
		20	6	1100	110	110	380
			13	600	50	40	235
			18	200	50	35	580
	1.0	5	5	375	260	215	675
			10	300	110	90	360
			20	250	30	20	150
		10	10	500	80	75	205
			15	100	100	70	615
			20	100	55	40	440
		20	2	1,000	380	465	700
			5	700	175	180	350
			8	100	240	170	1,000

●EJSG-08E

Motor Mounting	Acceleration/ Deceleration G	Screw Lead	Load Weight kg	Max. Speed mm/s	Overhang mm A	B	C
Straight	0.3	5	40	200	105	65	880
			60	200	45	25	480
			80	200	15	10	240
		10	30	400	120	80	600
			50	300	55	35	380
			70	300	15	10	165
		20	10	700	380	295	1,000
			20	700	155	120	540
			30	500	105	75	460
	1.0	5	40	150	120	75	535
			50	150	80	50	400
			80	100	30	20	305
		10	30	250	140	90	425
			50	150	80	50	400
			70	150	35	20	235
		20	10	700	315	295	570
			20	400	195	145	445
			30	100	210	125	1,000

* Value when the actuator's running life is 5,000 km.
* The load in the overhang direction is in a single direction only.
* Dimensions A, B, and C are from the center of the top surface of the table.
  Controller For ECMG, Stroke: 350 mm, the value is the maximum speed for each payload.
* The value may differ depending on the motor mounting direction.
* For acceleration/deceleration and payload, please refer to the payload table by speed and acceleration/deceleration (specifications P. for each model).

Allowable Overhang Length (EJSG Series)

[Vertical Installation]

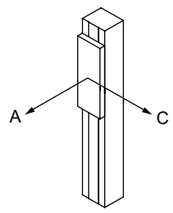

[Allowable Overhang Length]

●EJSG-04E

Motor Mounting	Acceleration/ Deceleration G	Screw Lead	Load Weight kg	Max. Speed mm/s	Overhang mm A	Overhang mm C
Straight	0.3	6	3	300	240	235
			6	250	100	100
			9	200	60	60
		12	1	600	690	635
			2	600	325	300
			3	500	215	200
	0.5	6	3	300	240	235
			6	250	100	100
			9	200	60	60
		12	1	600	680	625
			2	600	320	295
			3	500	210	200

●EJSG-05E

Motor Mounting	Acceleration/ Deceleration G	Screw Lead	Load Weight kg	Max. Speed mm/s	Overhang mm A	Overhang mm C
Straight	0.3	5	6	300	175	170
			10	250	90	90
			14	100	75	75
		10	2	500	565	535
			4	400	275	265
			7	300	145	140
		20	0.5	900	1,000	1,000
			1	800	1,000	895
			2.5	400	470	450
	0.5	5	6	300	175	170
			10	250	90	85
			14	100	75	75
		10	2	400	590	570
			4	300	290	280
			7	300	145	140
		20	0.5	900	1,000	1,000
			1	800	985	870
			2.5	400	465	445

●EJSG-08E

Motor Mounting	Acceleration/ Deceleration G	Screw Lead	Load Weight kg	Max. Speed mm/s	Overhang mm A	Overhang mm C
Straight	0.3	5	15	150	270	265
			30	50	135	135
			43	50	80	80
		10	13	250	265	265
			20	150	185	185
			28	50	150	150
		20	1	600	1,000	1,000
			2	600	1,000	1,000
			3	500	1,000	1,000
	0.5	5	15	150	270	265
			30	50	135	135
			43	50	80	80
		10	12	250	290	290
			20	50	230	230
			28	50	150	150
		20	1	600	1,000	1,000
			2	600	1,000	1,000
			3	500	1,000	1,000

* Value when the actuator's running life is 5,000 km.
* The load in the overhang direction is in a single direction only.
* Dimensions A, B, and C are from the center of the top surface of the table.
  Controller For ECMG, Stroke: 350 mm, the value is the maximum speed for each payload.
* The value may differ depending on the motor mounting direction.
* For acceleration/deceleration and payload, please refer to the payload table by speed and acceleration/deceleration (specifications P. for each model).

Slider Parallelism *Reference Value

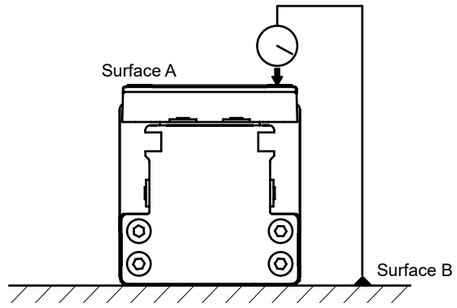

(mm)

	Parallelism Surface A with respect to Surface B
EJSG-04 Series	0.03
EJSG-05 Series	
EJSG-08 Series	

* This is the parallelism when the product is fixed to a surface plate.

Table Displacement *Reference Value

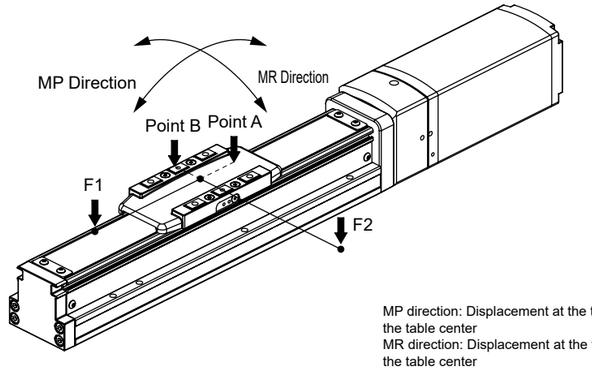

MP direction: Displacement at the table end (point A) when a load (F1) is applied at a position 100 mm away from the table center
MR direction: Displacement at the table end (point B) when a load (F2) is applied at a position 100 mm away from the table center

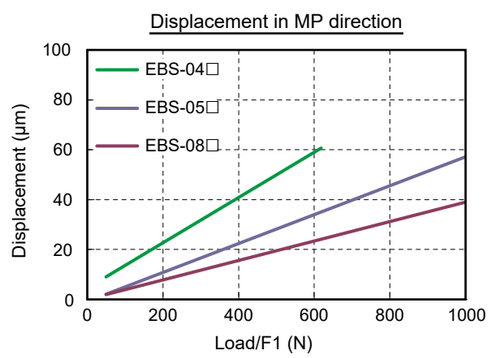

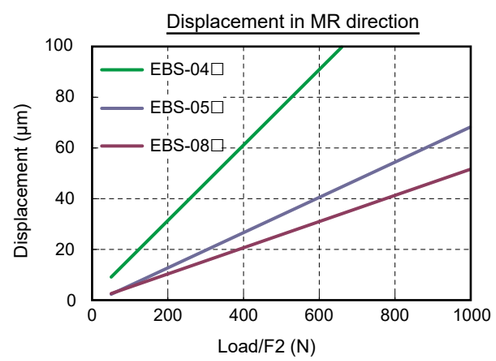

Maintenance Parts

Maintenance Parts (Motor Unit)

		Model No.	Applicable Models
Without Brake	Absolute Encoder	EJSG-04E-MOTORUNIT-NB	EJSG-04E
		EJSG-04R-MOTORUNIT-NB	EJSG-04R/D/L
		EJSG-05E-MOTORUNIT-NB	EJSG-05E
		EJSG-05R-MOTORUNIT-NB	EJSG-05R/D/L
		EJSG-08E-MOTORUNIT-NB	EJSG-08E
		EJSG-08R-MOTORUNIT-NB	EJSG-08R/D/L
	Incremental Encoder	EJSG-04E-MOTORUNIT-NC	EJSG-04E
		EJSG-04R-MOTORUNIT-NC	EJSG-04R/D/L
		EJSG-05E-MOTORUNIT-NC	EJSG-05E
		EJSG-05R-MOTORUNIT-NC	EJSG-05R/D/L
		EJSG-08E-MOTORUNIT-NC	EJSG-08E
		EJSG-08R-MOTORUNIT-NC	EJSG-08R/D/L
With Brake	Absolute Encoder	EJSG-04E-MOTORUNIT-BB	EJSG-04E
		EJSG-04R-MOTORUNIT-BB	EJSG-04R/D/L
		EJSG-05E-MOTORUNIT-BB	EJSG-05E
		EJSG-05R-MOTORUNIT-BB	EJSG-05R/D/L
		EJSG-08E-MOTORUNIT-BB	EJSG-08E
		EJSG-08R-MOTORUNIT-BB	EJSG-08R/D/L
	Incremental Encoder	EJSG-04E-MOTORUNIT-BC	EJSG-04E
		EJSG-04R-MOTORUNIT-BC	EJSG-04R/D/L
		EJSG-05E-MOTORUNIT-BC	EJSG-05E
		EJSG-05R-MOTORUNIT-BC	EJSG-05R/D/L
		EJSG-08E-MOTORUNIT-BC	EJSG-08E
		EJSG-08R-MOTORUNIT-BC	EJSG-08R/D/L

Maintenance Parts / Motor Mounting Direction: For right, bottom, and left folded-back type (Timing Belt)

Model No.	Applicable Models
EJSG-04R-BELT	EJSG-04R/D/L
EJSG-05R-BELT	EJSG-05R/D/L
EJSG-08R-BELT	EJSG-08R/D/L

Maintenance Parts

Maintenance Parts (Steel Belt)

Model No.	Applicable Models
EJSG-04-STEELBELT (4-digit stroke code)	EJSG-04 (corresponding stroke product)
EJSG-05-STEELBELT (4-digit stroke code)	EJSG-05 (corresponding stroke product)
EJSG-08-STEELBELT (4-digit stroke code)	EJSG-08 (corresponding stroke product)

Maintenance Parts/(Connector Cover)

Model No.	Applicable Models
EJSG-04-CNCOVER	EJSG-04-G
EJSG-05-CNCOVER	EJSG-05-G, EJSG-08-G

Special Order Products

● Intermediate Stroke Support
Can be manufactured in 10 mm increments. The minimum stroke is 50 mm.
* The stroke range varies depending on the model.

● Change of Machined Hole Position
It is possible to change the position of the positioning pin hole on the bottom of the body.

● Change of Grease
It is possible to change the grease used in the sliding parts of the actuator to your specified grease.
There are restrictions on the greases that can be used.

● Change of Fitting Position
It is possible to change the position of the port (fitting) for pressurization and vacuum scavenging.
It is also possible to change the shape of the fitting, such as to a straight type.

*For details on special order products, please contact our sales office.

To Use This Product Safely

Be sure to read this before use.
For general information on electric actuators, please see intro 17.

Individual Precautions: Electric Actuator EJSG Series

During Design and Selection

1. Common

Danger

■Do not use in places where hazardous materials such as flammable, ignitable, or explosive substances are present.
There is a risk of ignition, fire, or explosion.

■Do not allow water droplets, oil droplets, etc. to come into contact with the product.
This can cause fire or malfunction.

■When installing the product, be sure to hold and fix it securely (including the workpiece).
There is a risk of injury due to the product tipping over, falling, malfunctioning, etc. As a general rule, please fix the product using all mounting holes.

■Be sure to use a DC stabilized power supply (24 VDC ±10%) for the motive power supply and control power supply.
Direct connection to an AC power supply can cause fire, bursting, damage, etc.

■Please use only a 24 VDC power supply.
Using a 48 V power supply may cause the controller to malfunction.

Warning

■Use the product within its specific specification range.

■Install a safety fence to prevent entry into the movable range of the electric actuator. Also, in preparation for emergencies, install an emergency stop push button switch for the device in an easily accessible location. The emergency stop push button must have a structure and wiring that does not automatically reset and cannot be carelessly reset by a person.

■When an emergency stop is performed, it may take several seconds to stop depending on the speed during movement and the mounted load.

■In the event of a system abnormality such as an emergency stop or power failure, if the machine stops, design the safety circuit or device to prevent damage to the equipment, personal injury, etc.

■Install in a dry indoor location.
In places where it is exposed to rainwater or in humid places (humidity of 80% or more, places with condensation), there is a risk of electric leakage or fire. Oil drops and oil mist are also strictly prohibited. Use in such environments can cause damage or malfunction.

■The product must be subjected to Class D grounding work (grounding resistance of 100 Ω or less).
If an electric leakage occurs, there is a risk of electric shock or malfunction.

■If using the actuator in an installation other than horizontal or wall-mounted, select the one with a brake.
If it does not have a brake, when the servo is OFF (including emergency stop and alarm) or when the power is OFF, the movable part may fall, causing injury or damage to the workpiece.

■The brake cannot completely hold the actuator in all cases. When performing maintenance on applications that move the slider with an unbalanced load, or when stopping the machine for a long time, if safety needs to be ensured, be sure to bring it to a balanced state or provide a mechanical locking mechanism.

■When using the actuator in a vertical installation, position the motor as high as possible.
If the motor is on the lower side, there is no problem in normal operation, but if it is stopped for a long period of time, the grease may separate and flow into the motor, which may cause a malfunction in rare cases.

■Observe the operating and storage temperatures, and use and store in a condensation-free state.
Storage Temperature: -10°C to 50°C, Storage Humidity: 35% to 80%, Operating Temperature: 10 to 40°C, Operating Humidity: 35% to 80% (This may cause product malfunction or reduced service life.) Ventilate if heat builds up.

■Do not use in places where condensation occurs due to sudden changes in ambient temperature.

■Install in a location free from direct sunlight, dust, heat sources, corrosive gases, explosive gases, flammable gases, and combustible materials. In addition, this product has not been considered for chemical resistance.
This can cause malfunction, explosion, or fire.

■Use and store in a location free from strong electromagnetic waves, ultraviolet rays, and radiation.
This can cause malfunction or failure.

■Consider the possibility of power source failure.
Take measures to ensure that even if a failure occurs in the power source, it does not cause injury or damage to people or equipment.

■Consider the operating state when restarting after an emergency stop or abnormal stop.
Design it so that restarting does not cause harm to people or equipment. Also, if it is necessary to reset the electric actuator to the starting position, design a safe control device. Consider the possibility of failure of the installed motor. Take measures to ensure that even if a failure occurs in the power source, it does not cause harm to people or equipment.

■Do not use in places with impact or vibration.

■Do not apply a load to the product that exceeds the allowable value in the selection data.

■When pushing workpieces, etc., please use the pushing operation.

Caution

■Please use within a range where the moving table does not collide at the stroke end.

■Clearly state the maintenance conditions in the equipment's instruction manual.
Depending on the usage status, usage environment, and maintenance, the functions of this product may be significantly degraded, and safety may not be ensured. If maintenance is performed correctly, the product functions can be fully demonstrated.

■The product is manufactured in accordance with various standards. Never disassemble or modify.

■Please confirm the suitability of our products for the system, machine, and equipment you use at your own responsibility.

■Use wiring that does not induce induction noise.
Avoid places where large currents or strong magnetic fields are generated. Do not use the same wiring (with multi-core cables) as the power lines for large motors other than this product. Do not use the same wiring as the inverter power supply and wiring part used for robots, etc., apply a frame ground to the power supply, and insert a filter in the output part.

■Do not use in an environment where strong magnetic fields are generated.
This can cause malfunction.

■Separate the power supply for the output part of this product from the power supply for inductive loads that generate surges, such as solenoid valves and relays.
If the power supply is shared, surge current will flow into the output part, causing damage. If a separate power supply cannot be used, connect a surge absorbing element directly in parallel to all inductive loads.

■Select a power supply with sufficient capacity for the number of products installed. If there is not enough capacity, it may malfunction.
Control power supply 0.4 A/unit
Motive power supply
[ECMG]
□35...12.4 A/unit, □42...12.2 A/unit
□56...12.5 A/unit
[ECG]
□35...2.4 A/unit, □42...2.7 A/unit
□56...4.0 A/unit

■Fixed cables cannot be used for applications involving repeated bending, so please fix them so that they do not move easily. For use in locations involving repeated bending, please use a flexible cable.

■Please use the fixed/flexible cable with a bending radius of 51 mm or more.
The bending radius cannot accommodate bending of the connector part, so it is recommended to fix it near the connector.

■When the power is turned on, to recognize the home position, if there is an external stopper or holding mechanism (brake, etc.), there is a possibility that an unintended position will be recognized as the home position. After turning on the power, please pay attention to the placement of external stoppers, etc., so that the home position can be reliably detected.

■When using the EJSG series, do not apply a magnetic field with a magnetic flux density of 0.7 mT or more to the product surface of the motor section.
This can cause damage to the product or malfunction.

■When using multiple EJSG series units, please install them with the motor parts separated by the distance shown in the figure below or more.
Installation at close intervals can cause malfunction.

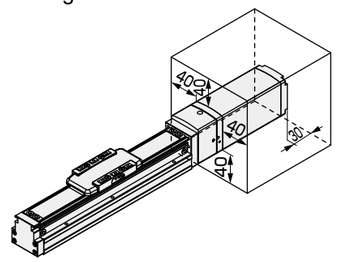

■When transporting or installing the actuator, hold the main body and avoid applying excessive force to the motor part.

■Please confirm that there is no interference between the workpiece attached to the slider and the motor part.
Some types have a motor part dimension that is larger than the slider mounting surface height.
(EJSG-08E, EJSG-08R, EJSG-08L)

■When using the EJSG-G series, please use a purge flow rate from the pressurizing port of 40 NL/min or more.

For precautions regarding mounting, installation, adjustment, operation, and maintenance, please refer to the CKD Component Product Site (https: //www.ckd.co.jp/kiki/en/) → 'model No.' → Instruction Manual

EJSG Model Selection Checklist -> **for CKD** (Contact)

Please fill out the form and send it to your nearest sales office. We will reply with the model selection results.

Customer:

Company		Department	
Name		E-mail	
TEL		FAX	

Selection Conditions:

Desired Model	(EJSG)-
Basic Specifications	Max. Stroke: mm, Ball screw lead: mm
Operating Conditions	Moving stroke: mm, travel time: s
	Set Speed: mm/s
	Set acceleration/deceleration: mm/s^2 (set acceleration/deceleration time: s)
	Repeatability: ± mm
Load Conditions	Slider Type
	Payload: kg
	Mounting orientation: Horizontal / Wall-mounted / Vertical / Ceiling-mounted / Other 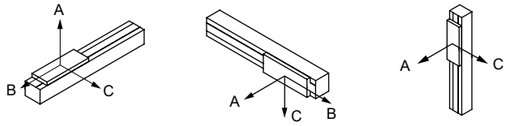
	Distance from slider center to load's center of gravity
	Direction A: mm Direction B: mm Direction C: mm
	Pushing load: None / Yes (N) During operation / When stopped Direction of force applied to the slider center ( )
Operating Environment	Ambient Temperature: °C, Ambient Humidity: %
	Atmosphere:
Interface Specifications	Parallel I/O / IO-Link / CC-Link / EtherCAT / EtherNet/IP
Special Notes	

MEMO

Slider Type
EJSG
EBS
Ending