Electric Actuator Servo Motor Compatible Motorless Specification

ECS

Slider Type
(Ball Screw Drive, Low Particle Emission Specification)

CONTENTS

Product Introduction 234
System Table 236
● Specifications, Model No. Notation, External Dimension Drawings
・ECS-14 240
・ECS-17 248
・ECS-22 256
● Model Selection 264
● Technical Data 266
⚠ Precautions for Use 277
Model Selection Checklist 278

Servo motor compatible
EBS
EBR
ETS
ETS Multi Axis
ECS
ETV
ECV
EKS
ESM
Ending

Slider type (ball screw drive, low dust generation) servo motor compatible

ECS Series

For rechargeable battery manufacturing | For food manufacturing | For low dust environments

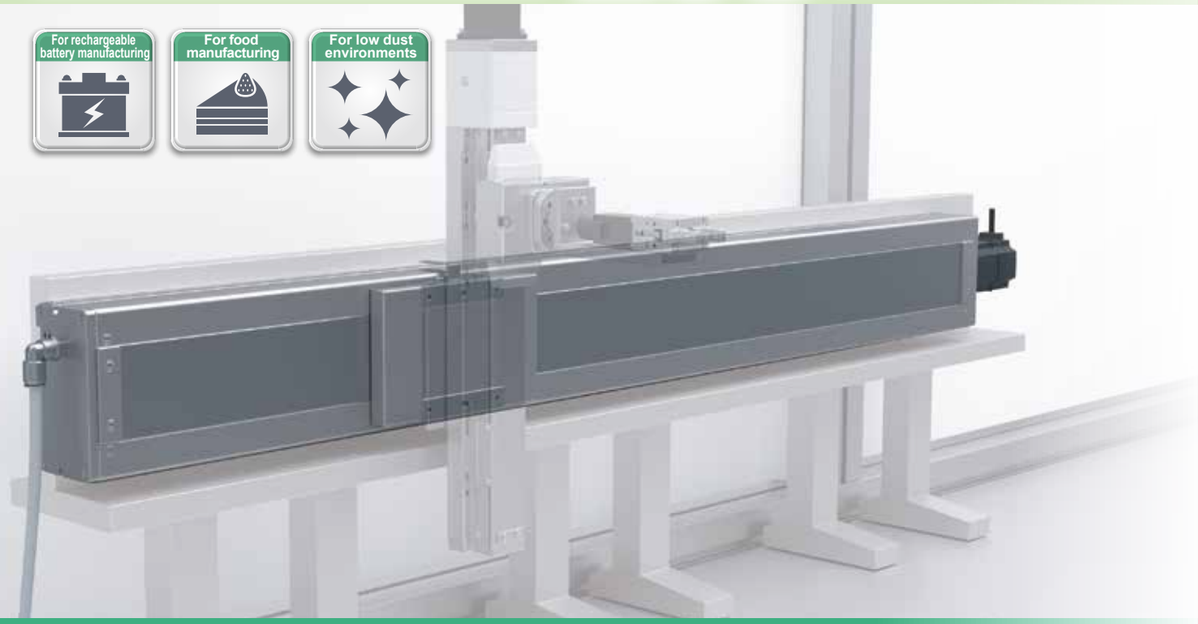

For High-Load Transport (Low Particle Emission Model)

Line-up	Body Size	14		17		22	Catalog page
	Motor capacity	200 W	400 W	400 W	750 W	750 W	
Low dust specification **ECS**		●	●	●	●	●	236
Supports low dust specifications and rechargeable battery manufacturing processes **ECS-P4**		●	●	●	●	●	CC-1226AA
Low dust specifications / compatible with food manufacturing processes **ECS-FP1**		●	●	●	●	●	CC-1271AA

List of supported motor manufacturers * Refer to each model page compatible model and capacity

Servo Motor

Mitsubishi Electric Corporation | Delta Electronics Co., Ltd. | Sanyo Denki Co., Ltd. | Mitsubishi Electric Corporation | Keyence Corporation | Panasonic Corporation | OMRON Corporation | Fuji Electric Corporation | FANUC CORPORATION | Bosch Rexroth AG | Rockwell Automation, Inc. | SIEMENS AG

High rigidity | Reduced man-hours | Easy maintenance

Supports high-load transfer

It has a high-rigidity structure with two built-in linear guides to firmly support the load. A grease nipple is equipped on the side of the actuator. It is possible to grease the ball screw and guide all at once from the outside without disassembling the main body. Significantly reduces maintenance man-hours.

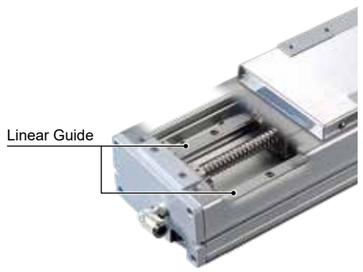

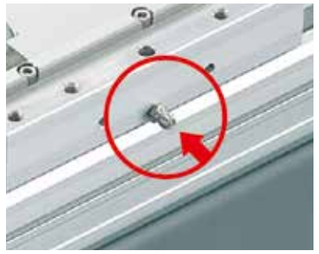

* Select by model No.

Low Particle Generation

Low Particle Emission Structure

The actuator body has a full cover with few gaps, and dust is exhausted outside through a suction port. Ideal for liquid crystal panel production lines and food lines.

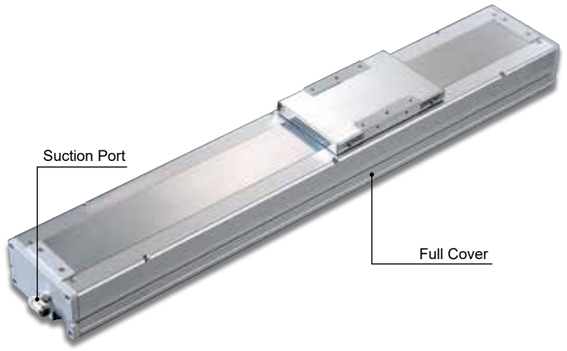

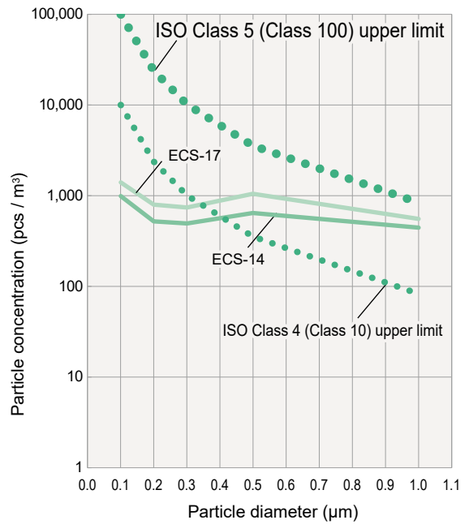

* Please refer to the catalog text for data acquisition conditions. This is not a guaranteed value.

High versatility | Space saving | Reduced design hours

Motor fold-back variations

We have prepared a total of 5 motor fold-back variations that can be selected according to the equipment.

Straight Mounting

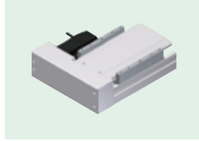
Right Side Return Mount

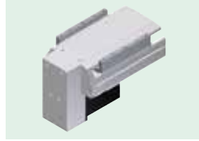
Bottom Side Return Mount

Left Side Fold-back Mounting

Built-in Mounting

* Please check the specification page for the conditions under which built-in mounting can be selected.

System Table

Type	Model No.		Application Motor (W)	Body Width (mm)	Screw Lead (mm)	Max. Payload (kg) Horizontal *1	Max. Payload (kg) Vertical	Stroke (mm) and Max. Speed (mm/s) *4	Page
								50 mm / 100 / 150 / 200 / 250 / 300 *5 / 350 / 400 / 450 / 500 / 550 / 600 *5 / 650 / 700 / 750 / 800 / 850 / 900 *5 / 950 / 1000 / 1050 *5 / 1100 / 1150 / 1200 *5 / 1250 *5 / 1300 / 1350 / 1400 / 1450 / 1500 *5 / 1550 / 1600 / 1650	
Low Particle Emission Type		ECS-14	200	135	5	95 *2	27 *2	250 / 225 / 200 / 175 / 150 / 125	240
						110	33		
					10	75	18	500 / 450 / 400 / 350 / 300 / 250	
						88	22	0.80 sec / 1.40 sec / 2.77 sec / 4.40 sec	
			400		16	44	7	800 / 720 / 640 / 560 / 480 / 400	
						48	10		
					20	35	6	1000 / 900 / 800 / 700 / 600 / 500	
						40	8	0.50 sec / 0.80 sec / 1.44 sec / 2.30 sec	
		ECS-17	400	170	5	120 *3	40 *3	250 / 225 / 200 / 175 / 150	248
						120	50		
					10	110	30	500 / 450 / 400 / 350 / 300	
						120	40	0.80 sec / 1.40 sec / 2.20 sec / 4.37 sec	
			750		20	75	14	1000 / 900 / 800 / 700 / 600	
						83	25		
					40	35	5	2000 / 1800 / 1600 / 1400 / 1200	
						50	10	0.35 sec / 0.50 sec / 0.70 sec / 1.24 sec	
		ECS-22	750	220	5	150	55	250 / 225 / 200 / 175 / 150 / 125 / 100	256
					10	150	45	500 / 450 / 400 / 350 / 300 / 250 / 200	
								0.80 sec / 1.40 sec / 2.00 sec / 3.63 sec / 7.70 sec	
					25	120	20	1250 / 1125 / 1000 / 875 / 750 / 625 / 500	
					40	60	10	2000 / 1800 / 1600 / 1400 / 1200 / 1000 / 800 / 600	
								0.35 sec / 0.50 sec / 0.70 sec / 1.20 sec / 2.70 sec	

*1 The payload when wall mounted is the same as for horizontal installation.
*2 The upper value is the payload at 200 W, and the lower value is the payload at 400 W.
*3 The upper value is the payload for 400 W, and the lower value is the payload for 750 W.

*4 The maximum speed is based on the assumption that the customer-mounted motor can output a rotation speed of 3000 rpm.
The max. speed is restricted by the stroke. Do not operate at speeds exceeding the limit.
*5 ⏱ shows the Positioning time. This is the case when a specific stroke is operated under horizontal installation, at max. speed, and max. acceleration/deceleration.
Please note that this is not the value at max. payload.

Model Number Configuration

Model No. Notation Method

ECS - 14 - 05 040 - E M 2 N C B N P

❶ ❷ ❸ ❹ ❺ ❻ ❼ ❽ ❾ ❿ ⓫

❶ Body Size

14	Body width 135 mm
17	Body width 170 mm
22	Body width 220 mm

❷ Screw Lead

05	5 mm
10	10 mm
16	16 mm
20	20 mm
25	25 mm
40	40 mm

❸ Stroke

005	50 mm
to	(every 50 mm)
150	1500 mm

❹ Motor mounting direction *1

E	Straight Mounting
B	Built-in Mounting
R	Right Side Return Mount
D	Bottom Side Return Mount
L	Left Side Fold-back Mounting

❺ Mounting Motor Specifications

M	Refer to the list on the page at right
Y	
P	
F	

❻ Motor Capacity

2	200 W
4	400 W
8	750 W

❼ Brake *1

N	None
B	Yes

❽ Origin sensor (1 pc) *2

N	None
A	Inside, motor side
B	Inside, opposite motor side
C	Outside, motor side (Shipped included)
D	Outside, opposite motor side (Shipped included)

❾ Limit sensor (2 pcs) *2

N	None
A	Inside
B	Outside

❿ Grease nipple

N	None (Body mounting direction: Standard)
R	Right direction
L	Left direction

⓫ Positioning pin hole

N	None
P	Yes

*1 Select "Yes" only when the motor mounting direction is "built-in mounting".
If selecting other mounting directions, please select "None."
*2 Sensor dogs are assembled at shipment regardless of the presence of the sensor.

Screw Lead / Stroke Compatibility Table by Body Size

❶ Body Size	❷ Screw Lead	❸ Stroke
14	05	005 to 105 (50 mm to 1050 mm)
	10	
	16	
	20	
17	05	005 to 125 (50 mm to 1250 mm)
	10	
	20	
	40	
22	05	005 to 150 (50 mm to 1500 mm)
	10	
	25	
	40	

Manufacturer	200 W	400 W	750 W
Mitsubishi Electric Corporation	M	M	M
Delta Electronics, Inc.	M	M	M
Sanyo Denki Co., Ltd.	M	M	-
Yaskawa Electric Corporation	Y	Y	Y
Keyence Corporation	Y	Y	Y
Panasonic Corporation	P	P	P
OMRON Corporation	P	P	P
Fuji Electric Co., Ltd.	M	M	M
FANUC CORPORATION	F	F	F
Bosch Rexroth AG	P	P	P
Rockwell Automation, Inc.	M	M	M
SIEMENS AG	M	M	M

Model Number Display Example

ECS-14-05040-EM2 NCBNP

❶ Body Size : 14 Series
❷ Screw lead : 5 mm
❸ Stroke : 400 mm
❹ Motor Mounting Direction : Straight Mounting
❺ Mounting motor specification : M (Refer to the table on the page at right)
❻ Motor Capacity : 200 W
❼ Brake : None
❽ Origin sensor : External motor side
❾ Limit sensor : Outside
❿ Grease nipple : None (Body mounting direction: Standard)
⓫ Locating pin hole : Yes

*This product is available only for the actuator (and motor mounting part) and does not include a motor.
The motor and driver should be prepared, mounted, and adjusted by the customer.

Recommended Servo Motor Mounting List

Recommended Servo Motor Mounting List

Code	Manufacturer	Series	200 W (ECS-14 Series)	400 W (ECS-14/17 Series)	750 W *3 (ECS-17/22 Series)
M	Mitsubishi Electric Corporation	MELSERVO J4	HG-KR23	HG-KR43	HG-KR73
		MELSERVO J5	HK-KT23 W	HK-KT43 W	HK-KT7 M3 W
M	Delta Electronics, Inc.	ECMA-C *2	ECMA-C10602	ECMA-C10604	ECMA-C10807
M	Sanyo Denki Co., Ltd.	SANMOTION R	R2□A06020	R2□A06040	-
Y	Yaskawa Electric Corporation	Σ-7 *1	SGM7 J-02	SGM7 J-04	SGM7 J-08
		Σ-X *1	SGMXJ-02	SGMXJ-04	SGMXJ-08
Y	Keyence Corporation	SV	SV-□020	SV-□040	SV-□075
		SV2 *1	SV2-□020	SV2-□040	SV2-□075
P	Panasonic Corporation	MINAS A5	MSMD02	MSMD04	MSMD08
		MINAS A6 *1	MSMF02	MSMF04	MSMF08
P	OMRON Corporation	G5	R88 M-K20030	R88 M-K40030	R88 M-K75030
		1 S *1	R88 M-1 M20030	R88 M-1 M40030	R88 M-1 M75030
M	Fuji Electric Co., Ltd.	ALPHA7 GYS	GYS201 D7-□B2□	GYS401 D7-□B2□	-
		ALPHA7 GYB	GYB201 D7-□B2□	GYB401 D7-□B2□	GYB751 D7-□B2□
F	FANUC CORPORATION *1	βiS-B	A06 B-2115-B1	A06 B-2116-B1	A06 B-2063-B1
P	Bosch Rexroth AG	MSM	MSM031 B	MSM031 C	MSM041 B
M	Rockwell Automation, Inc. *1	TLP	TLP-A070-020-DKA□2	TLP-A070-040-DKA□2	TLP-A090-075-DKA□2
M	SIEMENS AG *1	1 FK2 *4	1 FK2203-2 AG0	1 FK2203-4 AG0	1 FK2204-5 AK0

* For mounting motors other than the above and products from other motor manufacturers, please contact us.
*1 "Built-in mounting" is not supported.
*2 The ECMA series (with brake) does not support "built-in mounting".
*3 "Built-in mounting" is not supported for the ECS-17 750 W.
*4 The servo motor is an item subject to regulation under Item 7(8) of Appended Table 1 of the Export Trade Control Order, and it also falls under the specifications. (As of January 2021)

Electric Actuator Ball Screw Drive Slider Type Low Particle Emission Specification

ECS-14 Series

Motor Straight, Built-in Mounting Type

● Servo Motor Capacity : 200 W / 400 W

Model No. Notation Method

ECS - 14 - 05 040 - E M 2 N N N N P

❶ ❷ ❸ ❹ ❺ ❻ ❼ ❽ ❾ ❿ ⓫

❶ Body Size

14	Body width 135 mm

❷ Screw Lead

05	5 mm
10	10 mm
16	16 mm
20	20 mm

❸ Stroke

005 to 105	50 mm (every 50 mm) 1050 mm

❹ Motor mounting direction *1

E	Straight Mounting
B	Built-in Mounting

❺ Mounting Motor Specifications

M	Select the mounting motor specification from the table below.
Y	
P	
F	

❻ Motor Capacity

2	200 W
4	400 W

❼ Brake *1

N	None
B	Yes

❽ Origin sensor (1 pc) *2, *3, *4

N	None
A	Inside, motor side
B	Inside, opposite motor side
C	Outside, motor side
D	Outside, opposite motor side

❾ limit sensors (2 pcs) *2, *3, *4

N	None
A	Inside
B	Outside

❿ Grease Nipple *4, *5

N	None (Body mounting direction: Standard)
R	Right direction
L	Left direction

⓫ Positioning pin hole

N	None
P	Yes

Manufacturer	200 W	400 W
Mitsubishi Electric Corporation	M	M
Delta Electronics, Inc.	M	M
Sanyo Denki Co., Ltd.	M	M
Yaskawa Electric Corporation	Y	Y
Keyence Corporation	Y	Y
Panasonic Corporation	P	P
OMRON Corporation	P	P
Fuji Electric Co., Ltd.	M	M
FANUC CORPORATION	F	F
Bosch Rexroth AG	P	P
Rockwell Automation, Inc.	M	M
SIEMENS AG	M	M

* Refer to P. 239 for motor model No.

*1 "Available" can only be selected when "Built-in mounting" is selected for the motor mounting method.
*2 The home sensor and limit sensor are a set. If either is "None," please select "None" for the other as well.
*3 If the sensor is mounted on the inside, the position cannot be adjusted by the customer. (Shipped Included)
If the sensor is mounted on the outside, the position can be adjusted by the customer. (Shipped included)
*4 If you wish to use the home sensor, limit sensor, and grease nipple in the same direction, please contact us.
*5 Here, "Body mounting direction: Standard means mounting from the bottom.

Specifications

Applicable Motor Capacity		200 W / 400 W Servo Motor			
Drive Method		Ball screw ø16			
Ball Screw Accuracy Grade		C7			
Stroke mm		50 to 1050			
Screw lead mm		5	10	16	20
Max. Payload *1	Horizontal 200 W kg	95	75	44	35
	Horizontal 400 W kg	110	88	48	40
	Vertical 200 W kg	27	18	7	6
	Vertical 400 W kg	33	22	10	8
Max. Speed mm/s		250	500	800	1000
Rated thrust *1	200 W N	683	341	213	174
	400 W N	1388	694	433	347
Repeatability mm		±0.01			
Lost Motion mm		0.1 or less			
Dynamic Allowable Load N		6567			
Static Allowable Moment N·m		MP: 552 MY: 551 MR: 485			
Dynamic allowable moment N·m		MP: 262.7 MY: 262.7 MR: 261.0			
Operating ambient temperature, humidity		0 to 40°C (no freezing) 35 to 80% RH (no condensation)			
Storage Ambient Temperature, Humidity		-10 to 50°C (No freezing) 35 to 80% RH (no condensation)			
Atmosphere		No corrosive gas, explosive gas, or dust			

*1 Rated thrust and maximum payload are guideline values, assuming that the motor mounted will output the rated torque.

Stroke and Max. Speed

(mm/s)

Screw Lead \ Stroke	100 to 750	800	850	900	950	1050
5	250	225	200	175	150	125
10	500	450	400	350	300	250
16	800	720	640	560	480	400
20	1000	900	800	700	600	500

* The max. speed is the speed when the motor mounted by the customer can output a rotation speed of 3000 rpm. The max. speed is restricted by the stroke. Do not operate at speeds exceeding the limit.

Allowable Overhang Length

* Refer to P. 266 for details.

Moment Direction

MP MY MR

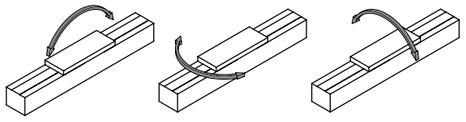

External Dimension Drawing Motor Straight Mounting

● ECS-14-□□□□□-E

● Refer to P. 272 for grease nipple dimensions.

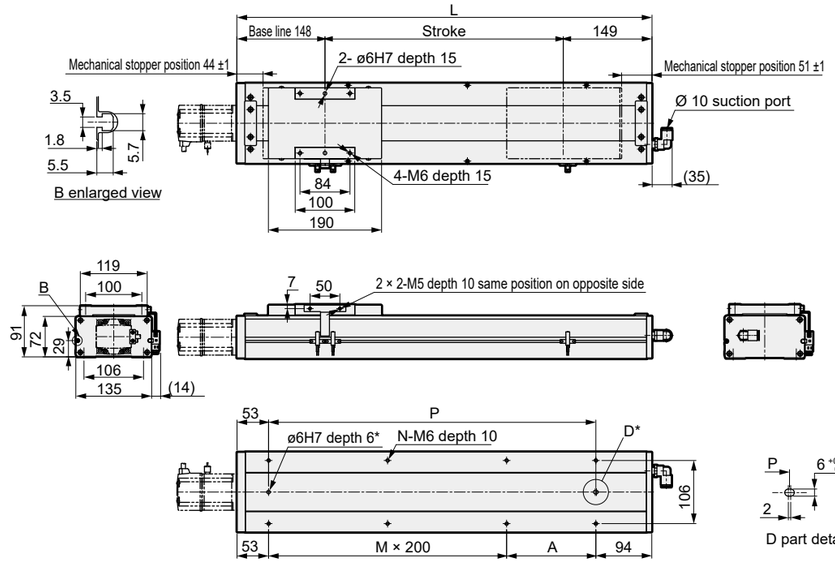

* positioning pin hole (option)

Stroke (mm)	50	100	150	200	250	300	350	400	450	500	550	600	650	700	750	800	850	900	950	1000	1050
L	347	397	447	497	547	597	647	697	747	797	847	897	947	997	1047	1097	1147	1197	1247	1297	1347
A	200	50	100	150	200	50	100	150	200	50	100	150	200	50	100	150	200	50	100	150	200
M	0	1	1	1	1	2	2	2	2	3	3	3	3	4	4	4	4	5	5	5	5
N	4	6	6	6	6	8	8	8	8	10	10	10	10	12	12	12	12	14	14	14	14
P	200	250	300	350	400	450	500	550	600	650	700	750	800	850	900	950	1000	1050	1100	1150	1200
Weight (kg)	10.5	11.1	11.7	12.3	12.9	13.5	14.1	14.7	15.3	15.9	16.5	17.1	17.7	18.3	18.9	19.5	20.1	20.7	21.3	21.9	22.5

Motor Mounting Part

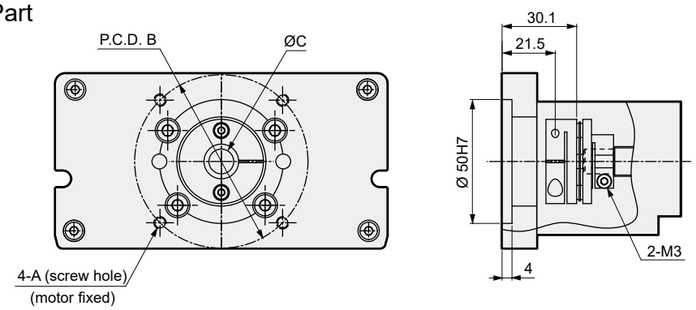

Mounting Motor Specification		A	B	C	Motor mounting bolt
M	200 W / 400 W	M5	ø70	ø14	4-M5 x L18
Y	200 W / 400 W	M5	ø70	ø14	4-M5 x L18
P	200 W / 400 W	M4	ø70	ø11/ø14	4-M4 x L18
F	200 W / 400 W	M5	ø70	ø9/ø14	4-M5 x L16 / 4-M5 x L18

List of Accessories

[Motor Mounting Parts]

Mounting Motor Specification	Coupling	Fitting	Motor Capacity	Motor mounting bolts Size	Motor mounting bolts Quantity
M	Shipped Included	Shipped Included	200 W/ 400 W	M5	4
Y				M5	4
P				M4	4
F				M5	4

* For fitting details, please refer to P. 274.

[Home Sensor / Limit Sensor]

Manufacturer	Model	Quantity
OMRON	EE-SX672	3

* For sensor specifications, please refer to P. 270.

External Dimension Drawing: Motor Built-in Mounting

● ECS-14-□□□□□-B

● Refer to P. 272 for grease nipple dimensions.

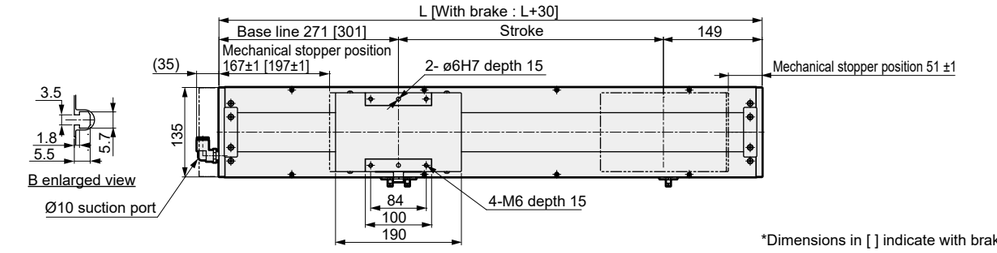

*Dimensions in [ ] indicate with brake.

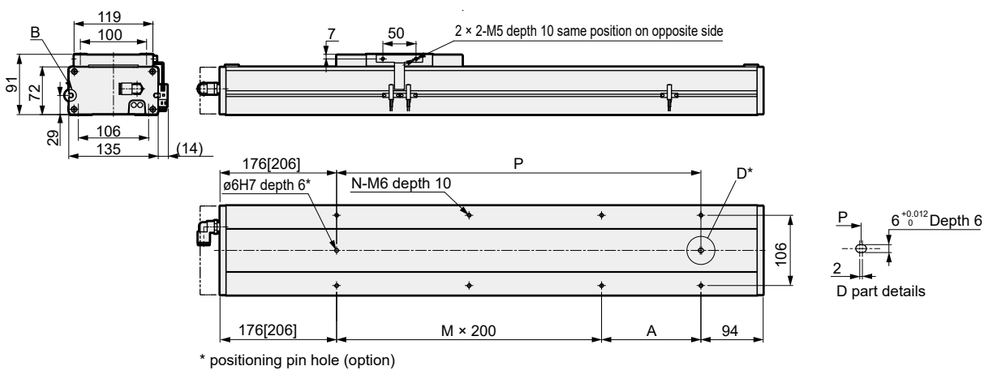

* positioning pin hole (option)

Stroke (mm)	50	100	150	200	250	300	350	400	450	500	550	600	650	700	750	800	850	900	950	1000	1050
L	470	520	570	620	670	720	770	820	870	920	970	1020	1070	1120	1170	1220	1270	1320	1370	1420	1470
A	200	50	100	150	200	50	100	150	200	50	100	150	200	50	100	150	200	50	100	150	200
M	0	1	1	1	1	2	2	2	2	3	3	3	3	4	4	4	4	5	5	5	5
N	4	6	6	6	6	8	8	8	8	10	10	10	10	12	12	12	12	14	14	14	14
P	200	250	300	350	400	450	500	550	600	650	700	750	800	850	900	950	1000	1050	1100	1150	1200
Weight (kg)	11.5	12.1	12.7	13.3	13.9	14.5	15.1	15.7	16.3	16.9	17.5	18.1	18.7	19.3	19.9	20.5	21.1	21.7	22.3	22.9	23.5

Motor Mounting Part

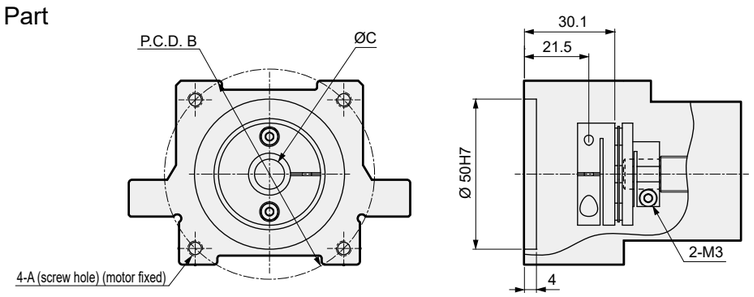

Mounting Motor Specification		A	B	C	Motor mounting bolt
M	200 W / 400 W	M5	ø70	ø14	4-M5 x L18
Y	200 W / 400 W	M5	ø70	ø14	4-M5 x L18
P	200 W / 400 W	M4	ø70	ø11/ø14	4-M4 x L18

List of Accessories

[Motor Mounting Parts]

Mounting Motor Specification	Coupling	Fitting	Motor Capacity	Motor mounting bolts	
				Size	Quantity
M	Shipped Included	Shipped Included	200 W/ 400 W	M5	4
Y				M5	4
P				M4	4

* For fitting details, please refer to P. 274.

[Home Sensor / Limit Sensor]

Manufacturer	Model	Quantity
OMRON	EE-SX672	3

* For sensor specifications, please refer to P. 270.

MEMO

Electric Actuator Ball Screw Drive Slider Type Low Particle Emission Specification

ECS-14 Series

Motor Fold-back Mounting Type

● Servo Motor Capacity : 200 W / 400 W

Model No. Notation Method

ECS - 14 - 05 050 - R M 2 N N N N P

❶ ❷ ❸ ❹ ❺ ❻ ❼ ❽ ❾ ❿ ⓫

❶ Body Size

14	Body width 135 mm

❷ Screw Lead

05	5 mm
10	10 mm
16	16 mm
20	20 mm

❸ Stroke

005 to 105	50 mm (every 50 mm) 1050 mm

❹ Motor mounting direction *5

R	Right Side Return Mount
D	Bottom Side Return Mount
L	Left Side Fold-back Mounting

❺ Mounting Motor Specifications

M	Select the mounting motor specification from the table below.
Y	
P	
F	

❻ Motor Capacity

2	200 W
4	400 W

❼ Brake

N	None

❽ Origin sensor (1 pc) *1, *2, *3

N	None
A	Inside, motor side
B	Inside, opposite motor side
C	Outside, motor side
D	Outside, opposite motor side

❾ limit sensors (2 pcs) *1, *2, *3

N	None
A	Inside
B	Outside

❿ Grease nipple *3, *4, *5

N	None (Body mounting direction: Standard)
R	Right direction
L	Left direction

⓫ Positioning pin hole

N	None
P	Yes

Manufacturer	200 W	400 W
Mitsubishi Electric Corporation	M	M
Delta Electronics, Inc.	M	M
Sanyo Denki Co., Ltd.	M	M
Yaskawa Electric Corporation	Y	Y
Keyence Corporation	Y	Y
Panasonic Corporation	P	P
OMRON Corporation	P	P
Fuji Electric Co., Ltd.	M	M
FANUC CORPORATION	F	F
Bosch Rexroth AG	P	P
Rockwell Automation, Inc.	M	M
SIEMENS AG	M	M

* Refer to P. 239 for motor model No.

*1 The home sensor and limit sensor are a set. If either is "None," please select "None" for the other as well.
*2 If the sensor is mounted on the inside, the position cannot be adjusted by the customer. (Shipped Included)
If the sensor is mounted on the outside, the position can be adjusted by the customer. (Shipped included)
*3 If you wish to use the home sensor, limit sensor, and grease nipple in the same direction, please contact us.
*4 Here, "Body mounting direction: Standard means mounting from the bottom.
*5 If "R" is selected for the motor mounting direction, "R" cannot be selected for the grease nipple.
If "L" is selected, "L" cannot be selected for the grease nipple.

Specifications

Applicable Motor Capacity		200 W/400 W Servo Motor			
Drive Method		Ball screw ø16			
Ball Screw Accuracy Grade		C7			
Stroke mm		50 to 1050			
Screw lead mm		5	10	16	20
Max. Payload *1	Horizontal 200 W kg	95	75	44	35
	Horizontal 400 W kg	110	88	48	40
	Vertical 200 W kg	27	18	7	6
	Vertical 400 W kg	33	22	10	8
Max. Speed mm/s		250	500	800	1000
Rated thrust *1	200 W N	683	341	213	174
	400 W N	1388	694	433	347
Repeatability mm		±0.01			
Lost Motion mm		0.1 or less			
Dynamic Allowable Load N		6567			
Static Allowable Moment N·m		MP : 552 MY : 551 MR : 485			
Dynamic allowable moment N·m		MP : 262.7 MY : 262.7 MR : 261.0			
Operating ambient temperature, humidity		0 to 40°C (no freezing) 35 to 80% RH (no condensation)			
Storage Ambient Temperature, Humidity		-10 to 50°C (No freezing) 35 to 80% RH (no condensation)			
Atmosphere		No corrosive gas, explosive gas, or dust			

*1 Rated thrust and maximum payload are guideline values, assuming that the motor mounted will output the rated torque.

Stroke and Max. Speed

(mm/s)

Screw Lead \ Stroke	100 to 750	800	850	900	950	1050
5	250	225	200	175	150	125
10	500	450	400	350	300	250
16	800	720	640	560	480	400
20	1000	900	800	700	600	500

* The max. speed is the speed when the motor mounted by the customer can output a rotation speed of 3000 rpm.
The max. speed is restricted by the stroke. Do not operate at speeds exceeding the limit.

Allowable Overhang Length

* Refer to P. 266 for details.

Moment Direction

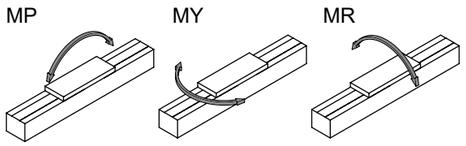

External Dimension Drawing Motor Right Side Fold-back Mounting

● ECS-14-□□□□□-R

● For grease nipple dimension drawings, please refer to P. 272.

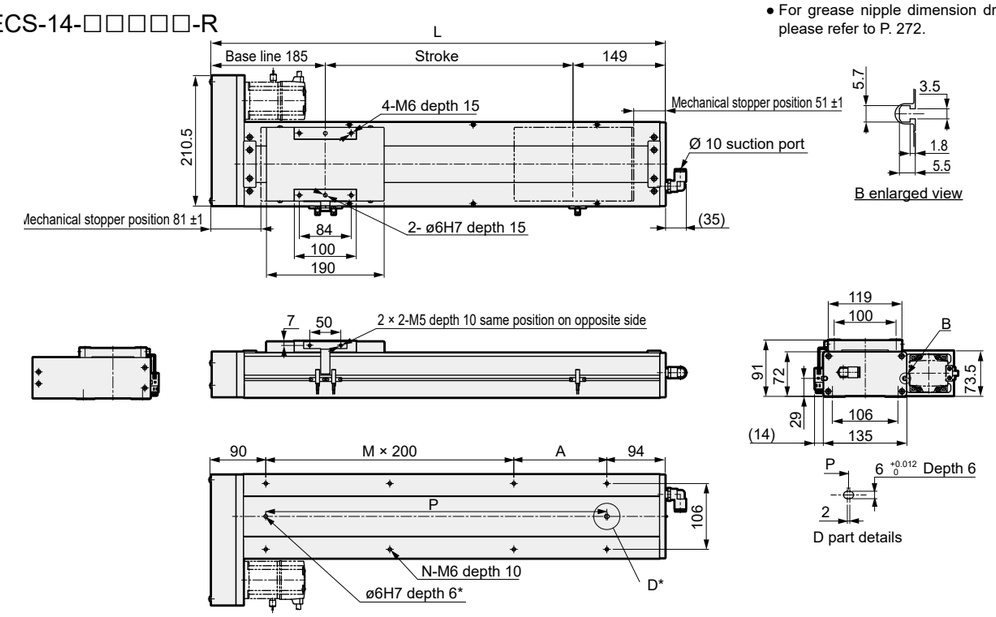

* positioning pin hole (option)

Stroke (mm)	50	100	150	200	250	300	350	400	450	500	550	600	650	700	750	800	850	900	950	1000	1050
L	384	434	484	534	584	634	684	734	784	834	884	934	984	1034	1084	1134	1184	1234	1284	1334	1384
A	200	50	100	150	200	50	100	150	200	50	100	150	200	50	100	150	200	50	100	150	200
M	0	1	1	1	1	2	2	2	2	3	3	3	3	4	4	4	4	5	5	5	5
N	4	6	6	6	6	8	8	8	8	10	10	10	10	12	12	12	12	14	14	14	14
P	200	250	300	350	400	450	500	550	600	650	700	750	800	850	900	950	1000	1050	1100	1150	1200
Weight (kg)	11.0	11.6	12.2	12.8	13.4	14.0	14.7	15.3	15.9	16.5	17.1	17.8	18.4	19.0	19.6	20.2	20.9	21.5	22.1	22.7	23.3

Motor Mounting Part

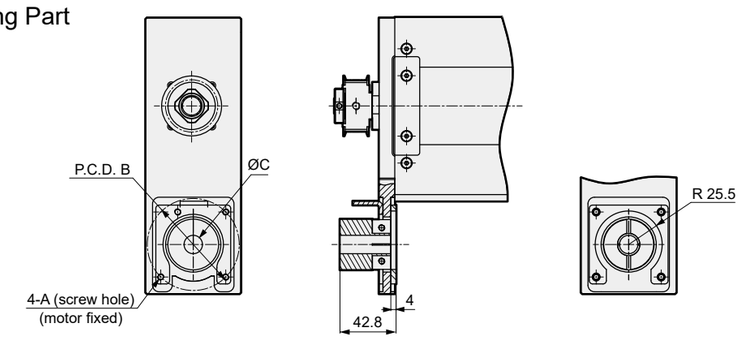

Mounting Motor Specification		A	B	C	Motor mounting bolt
M	200 W / 400 W	M5	ø70	ø14	4-M5 x L18
Y	200 W / 400 W	M5	ø70	ø14	4-M5 x L18
P	200 W / 400 W	M4	ø70	ø11/ø14	4-M4 x L18
F	200 W / 400 W	M5	ø70	ø9/ø14	4-M5 xL18

List of Accessories

[Motor Mounting Parts]

Mounting Motor Specification	Timing belt, pulley	Fitting	Motor Capacity	Motor mounting bolts Size	Motor mounting bolts Quantity
M	Shipped included	Shipped Included	200 W/ 400 W	M5	4
Y				M5	4
P				M4	4
F				M5	4

* For fitting details, please refer to P. 274.

[Home Sensor / Limit Sensor]

Manufacturer	Model	Quantity
OMRON	EE-SX672	3

* For sensor specifications, please refer to P. 270.

External Dimension Drawing Motor Bottom Side Fold-back Mounting

●ECS-14-□□□□□-D

・For grease nipple dimension drawings, please refer to P. 272.

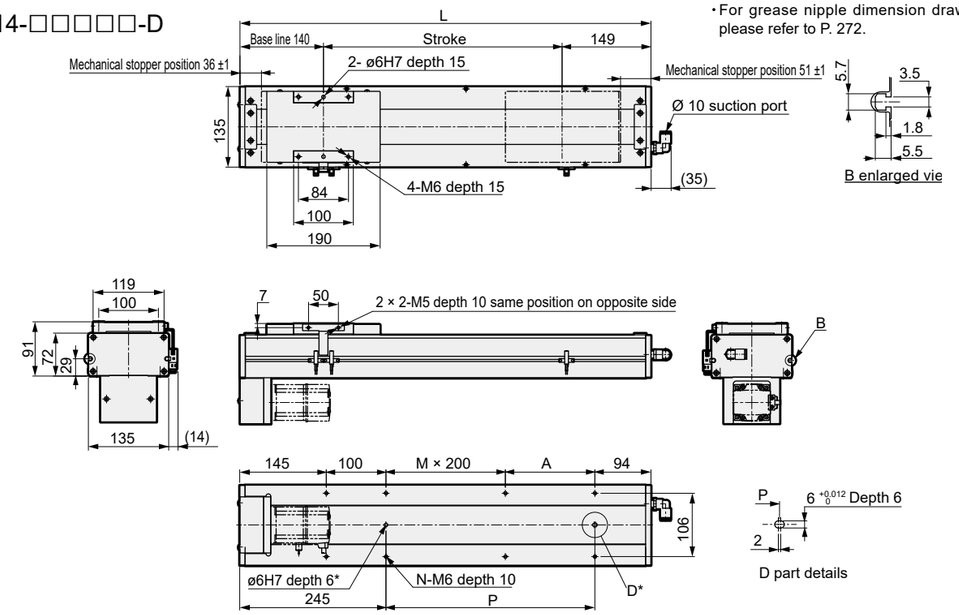

* positioning pin hole (option) The only positioning pin hole on stroke 50 is a round hole.

Stroke (mm)	50	100	150	200	250	300	350	400	450	500	550	600	650	700	750	800	850	900	950	1000	1050
L	339	389	439	489	539	589	639	689	739	789	839	889	939	989	1039	1089	1139	1189	1239	1289	1339
A	0	50	100	150	200	50	100	150	200	50	100	150	200	50	100	150	200	50	100	150	200
M	0	0	0	0	0	1	1	1	1	2	2	2	2	3	3	3	3	4	4	4	4
N	4	6	6	6	6	8	8	8	8	10	10	10	10	12	12	12	12	14	14	14	14
P	0	50	100	150	200	250	300	350	400	450	500	550	600	650	700	750	800	850	900	950	1000
Weight (kg)	11.0	11.6	12.2	12.8	13.4	14.0	14.7	15.3	15.9	16.5	17.1	17.8	18.4	19.0	19.6	20.2	20.9	21.5	22.1	22.7	23.3

Motor Mounting Part

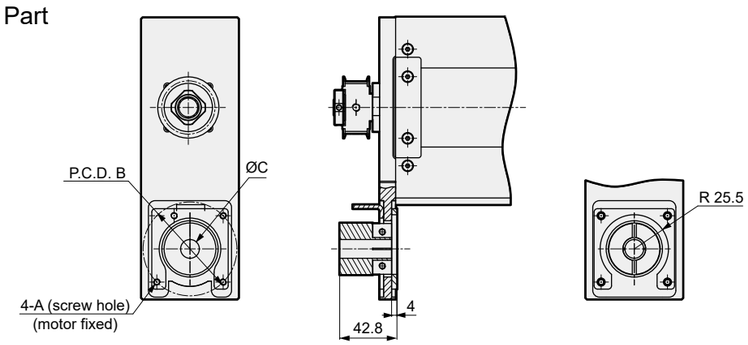

Mounting Motor Specification		A	B	C	Motor mounting bolt
M	200 W / 400 W	M5	ø70	ø14	4-M5 x L18
Y	200 W / 400 W	M5	ø70	ø14	4-M5 x L18
P	200 W / 400 W	M4	ø70	ø11/ø14	4-M4 x L18
F	200 W / 400 W	M5	ø70	ø9/ø14	4-M5 x L18

List of Accessories

[Motor Mounting Parts]

Mounting Motor Specification	Timing belt, pulley	Fitting	Motor Capacity	Motor mounting bolts	
				Size	Quantity
M	Shipped included	Shipped Included	200 W/ 400 W	M5	4
Y				M5	4
P				M4	4
F				M5	4

* For fitting details, please refer to P. 274.

[Home Sensor / Limit Sensor]

Manufacturer	Model	Quantity
OMRON	EE-SX672	3

* For sensor specifications, please refer to P. 270.

External Dimension Drawing Motor Left Side Fold-back Mounting

●ECS-14-□□□□□-L

・For grease nipple dimension drawings, please refer to P. 272.

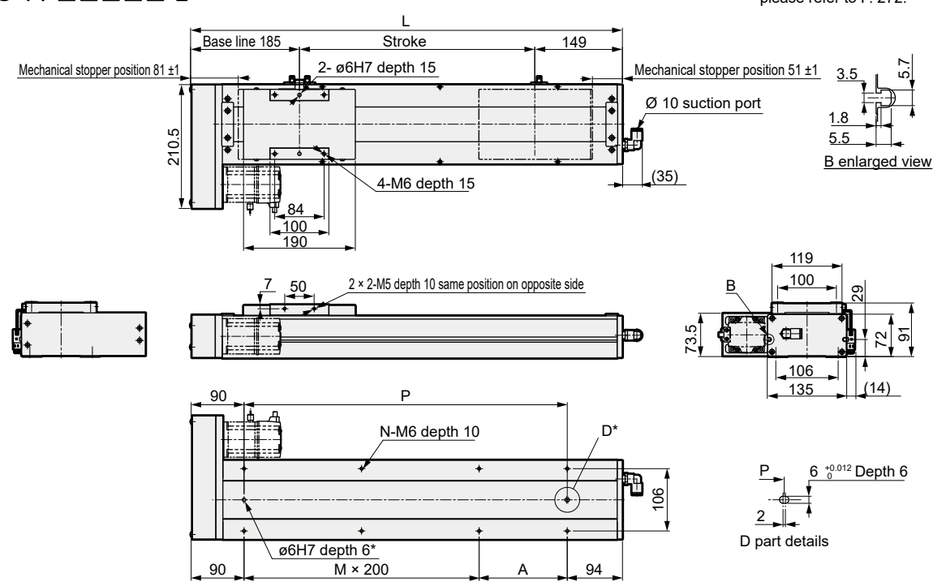

* positioning pin hole (option)

Stroke (mm)	50	100	150	200	250	300	350	400	450	500	550	600	650	700	750	800	850	900	950	1000	1050
L	384	434	484	534	584	634	684	734	784	834	884	934	984	1034	1084	1134	1184	1234	1284	1334	1384
A	200	50	100	150	200	50	100	150	200	50	100	150	200	50	100	150	200	50	100	150	200
M	0	1	1	1	1	2	2	2	2	3	3	3	3	4	4	4	4	5	5	5	5
N	4	6	6	6	6	8	8	8	8	10	10	10	10	12	12	12	12	14	14	14	14
P	200	250	300	350	400	450	500	550	600	650	700	750	800	850	900	950	1000	1050	1100	1150	1200
Weight (kg)	11.0	11.6	12.2	12.8	13.4	14.0	14.7	15.3	15.9	16.5	17.1	17.8	18.4	19.0	19.6	20.2	20.9	21.5	22.1	22.7	23.3

Motor Mounting Part

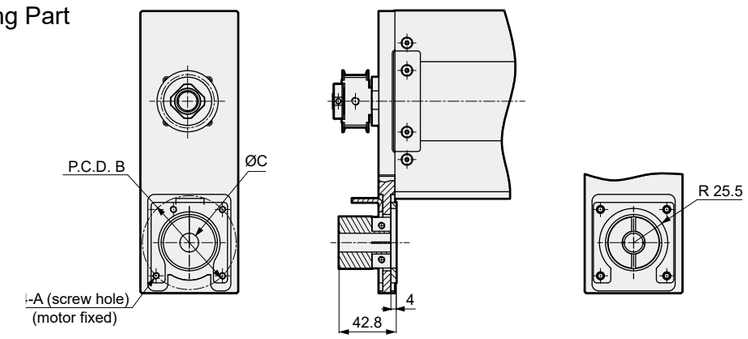

Mounting Motor Specification		A	B	C	Motor mounting bolt
M	200 W / 400 W	M5	ø70	ø14	4-M5 x L18
Y	200 W / 400 W	M5	ø70	ø14	4-M5 x L18
P	200 W / 400 W	M4	ø70	ø11/ø14	4-M4 x L18
F	200 W / 400 W	M5	ø70	ø9/ø14	4-M5 x L18

List of Accessories

[Motor Mounting Parts]

Mounting Motor Specification	Timing belt, pulley	Fitting	Motor Capacity	Motor mounting bolts	
				Size	Quantity
M	Shipped included	Shipped Included	200 W/ 400 W	M5	4
Y				M5	4
P				M4	4
F				M5	4

* For fitting details, please refer to P. 274.

[Home Sensor / Limit Sensor]

Manufacturer	Model	Quantity
OMRON	EE-SX672	3

* For sensor specifications, please refer to P. 270.

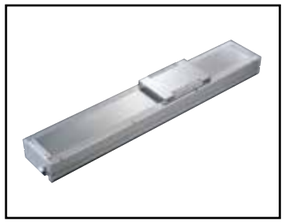

Electric Actuator Ball Screw Drive Slider Type Low Particle Emission Specification

ECS-17 Series

Motor Straight, Built-in Mounting Type

● Servo Motor Capacity : 400 W / 750 W

Model No. Notation Method

ECS - 17 - 05 040 - E M 4 N N N N P

❶ ❷ ❸ ❹ ❺ ❻ ❼ ❽ ❾ ❿ ⓫

❶ Body Size

17	Body width 170 mm

❷ Screw Lead

05	5 mm
10	10 mm
20	20 mm
40	40 mm

❸ Stroke

005 to 125	50 mm (every 50 mm) 1250 mm

❹ Motor mounting direction *1, *2

E	Straight Mounting
B	Built-in Mounting

❺ Mounting Motor Specifications

M	Select the mounting motor specification from the table below.
Y	
P	
F	

❻ Motor Capacity *1

4	400 W
8	750 W

❼ Brake *2

N	None
B	Yes

❽ Origin sensor (1 pc) *3, *4, *5

N	None
A	Inside, motor side
B	Inside, opposite motor side
C	Outside, motor side
D	Outside, opposite motor side

❾ limit sensors (2 pcs) *3, *4, *5

N	None
A	Inside
B	Outside

❿ Grease nipple *5, *6

N	None (Body mounting direction: Standard)
R	Right direction
L	Left direction

⓫ Positioning pin hole

N	None
P	Yes

Manufacturer	400 W	750 W
Mitsubishi Electric Corporation	M	M
Delta Electronics, Inc.	M	M
Sanyo Denki Co., Ltd.	M	-
Yaskawa Electric Corporation	Y	Y
Keyence Corporation	Y	Y
Panasonic Corporation	P	P
OMRON Corporation	P	P
Fuji Electric Co., Ltd.	M	M
FANUC CORPORATION	F	F
Bosch Rexroth AG	P	P
Rockwell Automation, Inc.	M	M
SIEMENS AG	M	M

* Refer to P. 239 for motor model No.

*1 For Motor Capacity 750 W type, "Built-in mounting" cannot be selected as the motor mounting method.
*2 "Available" can only be selected when "Built-in mounting" is selected for the motor mounting method.
*3 The home sensor and limit sensor are a set. If either is "None," please select "None" for the other as well.
*4 If the sensor is mounted on the inside, the position cannot be adjusted by the customer. (Shipped Included)
If the sensor is mounted on the outside, the position can be adjusted by the customer. (Shipped included)
*5 If you wish to use the home sensor, limit sensor, and grease nipple in the same direction, please contact us.
*6 Here, "Body mounting direction: Standard means mounting from the bottom.

Specifications

Applicable Motor Capacity		400 W/750 W Servo Motor			
Drive Method		Ball screw ø20			
Ball Screw Accuracy Grade		C7			
Stroke mm		50 to 1250			
Screw lead mm		5	10	20	40
Max. Payload *1	Horizontal 400 W kg	120	110	75	35
	Horizontal 750 W kg	120	120	83	50
	Vertical 400 W kg	40	30	14	7
	Vertical 750 W kg	50	40	25	10
Max. Speed mm/s		250	500	1000	2000
Rated thrust *1	400 W N	1388	694	347	174
	750 W N	2100	1050	525	260
Repeatability mm		±0.01			
Lost Motion mm		0.1 or less			
Dynamic Allowable Load N		10102			
Static Allowable Moment N·m		MP: 1034 MY: 1032 MR: 908			
Dynamic allowable moment N·m		MP: 424.3 MY: 424.3 MR: 520.3			
Operating ambient temperature, humidity		0 to 40°C (no freezing) 35 to 80%RH (no condensation)			
Storage Ambient Temperature, Humidity		-10 to 50°C (no freezing) 35 to 80%RH (no condensation)			
Atmosphere		No corrosive gas, explosive gas, or dust			

*1 Rated thrust and maximum payload are guideline values, assuming that the motor mounted will output the rated torque.

Stroke and Max. Speed

(mm/s)

Screw Lead \ Stroke	100 to 850	950	1050	1150	1250
5	250	225	200	175	150
10	500	450	400	350	300
20	1000	900	800	700	600
40	2000	1800	1600	1400	1200

* The max. speed is the speed when the motor mounted by the customer can output a rotation speed of 3000 rpm.
The max. speed is restricted by the stroke. Do not operate at speeds exceeding the limit.

Allowable Overhang Length

* Refer to P. 266 for details.

Moment Direction

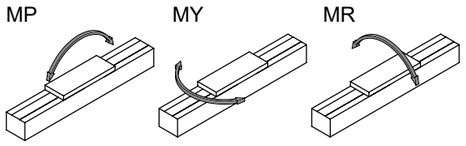

External Dimension Drawing Motor Straight Mounting

● ECS-17-□□□□□-E

● For grease nipple dimension drawings, please refer to P. 272.

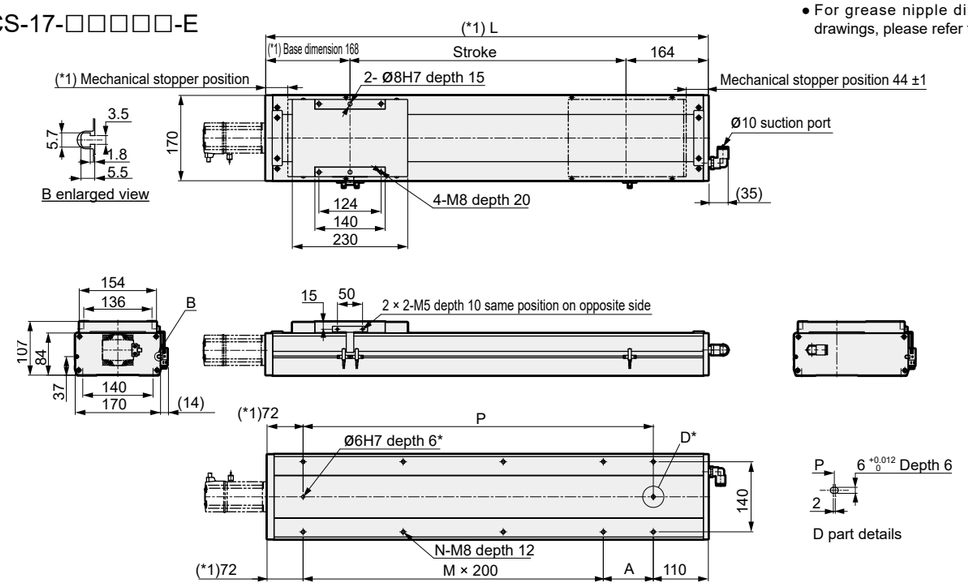

* positioning pin hole (option)

Stroke (mm)	50	100	150	200	250	300	350	400	450	500	550	600	650	700	750	800	850	900	950	1000	1050	1100	1150	1200	1250
L (*1)	382	432	482	532	582	632	682	732	782	832	882	932	982	1032	1082	1132	1182	1232	1282	1332	1382	1432	1482	1532	1582
A	200	50	100	150	200	50	100	150	200	50	100	150	200	50	100	150	200	50	100	150	200	50	100	150	200
M	0	1	1	1	1	2	2	2	2	3	3	3	3	4	4	4	4	5	5	5	5	6	6	6	6
N	4	6	6	6	6	8	8	8	8	10	10	10	10	12	12	12	12	14	14	14	14	16	16	16	16
P	200	250	300	350	400	450	500	550	600	650	700	750	800	850	900	950	1000	1050	1100	1150	1200	1250	1300	1350	1400
Weight (kg)	12.0	12.7	13.4	14.2	15.0	15.8	16.6	17.3	18.1	18.9	19.7	20.5	21.2	22.0	22.8	23.6	24.4	25.1	25.9	26.7	27.5	28.3	29.0	29.8	30.6

(*1) For Motor Capacity 750 W type, it will be +10 mm.

Motor Mounting Part

● ECS-17-400 W-E

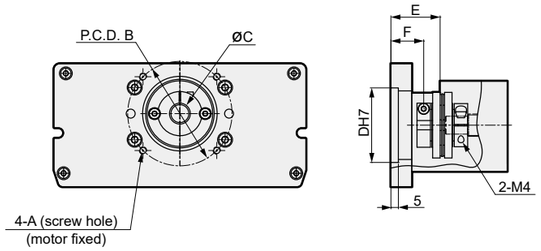

● ECS-17-750 W-E

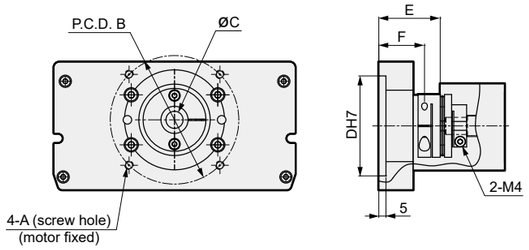

Mounting Motor Specification		A	B	C	D	E	F	Motor mounting bolt
M	400 W / 750 W	M5/M6	ø70/ø90	ø14/ø19	ø50/ø70	33/43	22/32	4-M5 x L18 / 4-M6 x L20
Y	400 W / 750 W	M5/M6	ø70/ø90	ø14/ø19	ø50/ø70	33/43	22/32	4-M5 x L18 / 4-M6 x L20
P	400 W / 750 W	M4/M5	ø70/ø90	ø14/ø19	ø50/ø70	33/43	22/32	4-M4 x L18 / 4-M5 x L20
F	400 W / 750 W	M5/M6	ø70/ø100	ø14/ø14	ø50/ø80	33/29	22/18	4-M5 x L18 / 4-M6 x L20

List of Accessories

[Motor Mounting Parts]

Mounting Motor Specification	Coupling	Fitting	Motor Capacity	Motor mounting bolts Size	Motor mounting bolts Quantity
M	Shipped Included	Shipped Included	400 W/ 750 W	M5/M6	4
Y				M5/M6	4
P				M4/M5	4
F				M5/M6	4

* For fitting details, please refer to P. 274.

[Home Sensor / Limit Sensor]

Manufacturer	Model	Quantity
OMRON	EE-SX672	3

* For sensor specifications, please refer to P. 270.

External Dimension Drawing Motor Built-in Mounting

● ECS-17-□□□□□-B

● For grease nipple dimension drawings, please refer to P. 272.

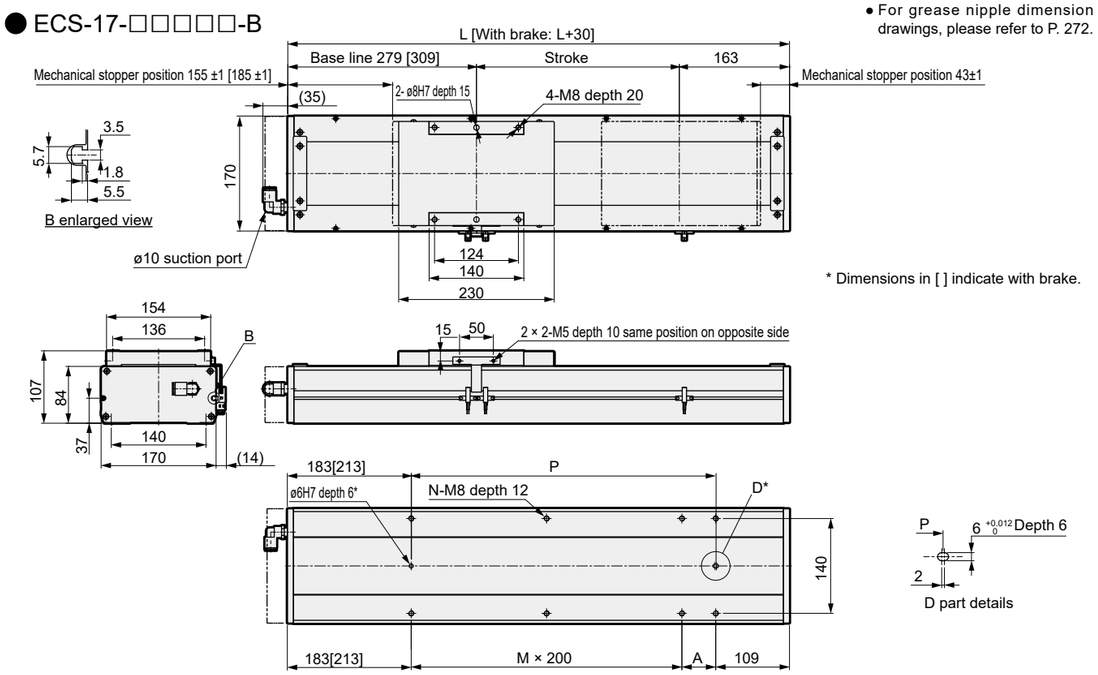

* Dimensions in [ ] indicate with brake.

* positioning pin hole (option)

Stroke (mm)	50	100	150	200	250	300	350	400	450	500	550	600	650	700	750	800	850	900	950	1000	1050	1100	1150	1200	1250
L	492	542	592	642	692	742	792	842	892	942	992	1042	1092	1142	1192	1242	1292	1342	1392	1442	1492	1542	1592	1642	1692
A	200	50	100	150	200	50	100	150	200	50	100	150	200	50	100	150	200	50	100	150	200	50	100	150	200
M	0	1	1	1	1	2	2	2	2	3	3	3	3	4	4	4	4	5	5	5	5	6	6	6	6
N	4	6	6	6	6	8	8	8	8	10	10	10	10	12	12	12	12	14	14	14	14	16	16	16	16
P	200	250	300	350	400	450	500	550	600	650	700	750	800	850	900	950	1000	1050	1100	1150	1200	1250	1300	1350	1400
Weight (kg)	12.5	13.3	14.1	14.9	15.7	16.5	17.3	18.1	18.9	19.7	20.5	21.3	22.1	22.9	23.7	24.5	25.3	26.1	26.9	27.7	28.6	29.4	30.2	31.0	31.8

Motor Mounting Part

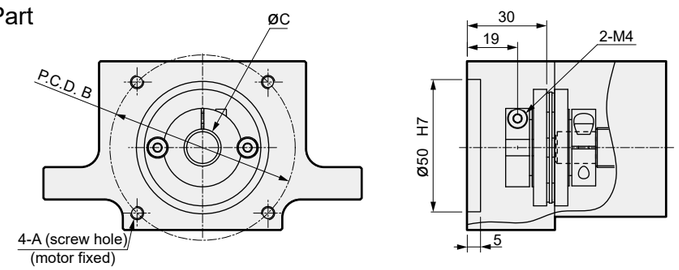

Mounting Motor Specification		A	B	C	Motor mounting bolt
M	400 W	M5	ø70	ø14	4-M5 x L18
Y	400 W	M5	ø70	ø14	4-M5 x L18
P	400 W	M4	ø70	ø14	4-M4 x L18

List of Accessories

[Motor Mounting Parts]

Mounting Motor Specification	Coupling	Fitting	Motor Capacity	Motor mounting bolts	
				Size	Quantity
M	Shipped Included	Shipped Included	400 W	M5	4
Y				M5	4
P				M4	4

* For fitting details, please refer to P. 274.

[Home Sensor / Limit Sensor]

Manufacturer	Model	Quantity
OMRON	EE-SX672	3

* For sensor specifications, please refer to P. 270.

MEMO

Electric Actuator Ball Screw Drive Slider Type Low Particle Emission Specification

ECS-17 Series

Motor Fold-back Mounting Type

● Servo Motor Capacity : 400 W / 750 W

Model No. Notation Method

ECS - 17 - 05 040 - R M 4 N N N N P

❶ ❷ ❸ ❹ ❺ ❻ ❼ ❽ ❾ ❿ ⓫

❶ Body Size

17	Body width 170 mm

❷ Screw Lead

05	5 mm
10	10 mm
20	20 mm
40	40 mm

❸ Stroke

005 to 125	50 mm (every 50 mm) 1250 mm

❹ Motor Mounting Direction

R	Right Side Return Mount
D	Bottom Side Return Mount
L	Left Side Fold-back Mounting

❺ Mounting Motor Specifications

M	Select the mounting motor specification from the table below.
Y	
P	
F	

❻ Motor Capacity

4	400 W
8	750 W

❼ Brake

N	None

❽ Origin sensor (1 pc) *1, *2, *3

N	None
A	Inside, motor side
B	Inside, opposite motor side
C	Outside, motor side
D	Outside, opposite motor side

❾ limit sensors (2 pcs) *1, *2, *3

N	None
A	Inside
B	Outside

❿ Grease nipple *3, *4, *5

N	None (Body mounting direction: Standard)
R	Right direction
L	Left direction

⓫ Positioning pin hole

N	None
P	Yes

Manufacturer	400 W	750 W
Mitsubishi Electric Corporation	M	M
Delta Electronics, Inc.	M	M
Sanyo Denki Co., Ltd.	M	-
Yaskawa Electric Corporation	Y	Y
Keyence Corporation	Y	Y
Panasonic Corporation	P	P
OMRON Corporation	P	P
Fuji Electric Co., Ltd.	M	M
FANUC CORPORATION	F	F
Bosch Rexroth AG	P	P
Rockwell Automation, Inc.	M	M
SIEMENS AG	M	M

* Refer to P. 239 for motor model No.

*1 The home sensor and limit sensor are a set. If either is "None," please select "None" for the other as well.
*2 If the sensor is mounted on the inside, the position cannot be adjusted by the customer. (Assembled shipmen)
If the sensor is mounted on the outside, the position can be adjusted by the customer. (Shipped included)
*3 If you wish to use the home sensor, limit sensor, and grease nipple in the same direction, please contact us.
*4 Here, "Body mounting direction: Standard means mounting from the bottom.
*5 If "R" is selected for the motor mounting direction, "R" cannot be selected for the grease nipple.
If "L" is selected, "L" cannot be selected for the grease nipple.

Specifications

Applicable Motor Capacity		400 W/750 W Servo Motor			
Drive Method		Ball screw ø20			
Ball Screw Accuracy Grade		C7			
Stroke mm		50 to 1250			
Screw lead mm		5	10	20	40
Max. Payload *1	Horizontal 400 W kg	120	110	75	35
	Horizontal 750 W kg	120	120	83	50
	Vertical 400 W kg	40	30	14	7
	Vertical 750 W kg	50	40	25	10
Max. Speed mm/s		250	500	1000	2000
Rated thrust *1	400 W N	1388	694	347	174
	750 W N	2100	1050	525	260
Repeatability mm		±0.01			
Lost Motion mm		0.1 or less			
Dynamic Allowable Load N		10102			
Static Allowable Moment N·m		MP: 1034 MY: 1032 MR: 908			
Dynamic allowable moment N·m		MP: 424.3 MY: 424.3 MR: 520.3			
Operating ambient temperature, humidity		0 to 40°C (no freezing) 35 to 80%RH (no condensation)			
Storage Ambient Temperature, Humidity		-10 to 50°C (no freezing) 35 to 80%RH (no condensation)			
Atmosphere		No corrosive gas, explosive gas, or dust			

*1 Rated thrust and maximum payload are guideline values, assuming that the motor mounted will output the rated torque.

Moment Direction

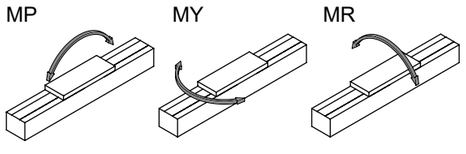

Stroke and Max. Speed

(mm/s)

Screw Lead \ Stroke	100 to 850	950	1050	1150	1250
5	250	225	200	175	150
10	500	450	400	350	300
20	1000	900	800	700	600
40	2000	1800	1600	1400	1200

* The max. speed is the speed when the motor mounted by the customer can output a rotation speed of 3000 rpm. The max. speed is restricted by the stroke. Do not operate at speeds exceeding the limit.

Allowable Overhang Length

* Refer to P. 266 for details.

External Dimension Drawing Motor Right Side Fold-back Mounting

● ECS-17 -□□□□□-R

● For grease nipple dimension drawings, please refer to P. 272.

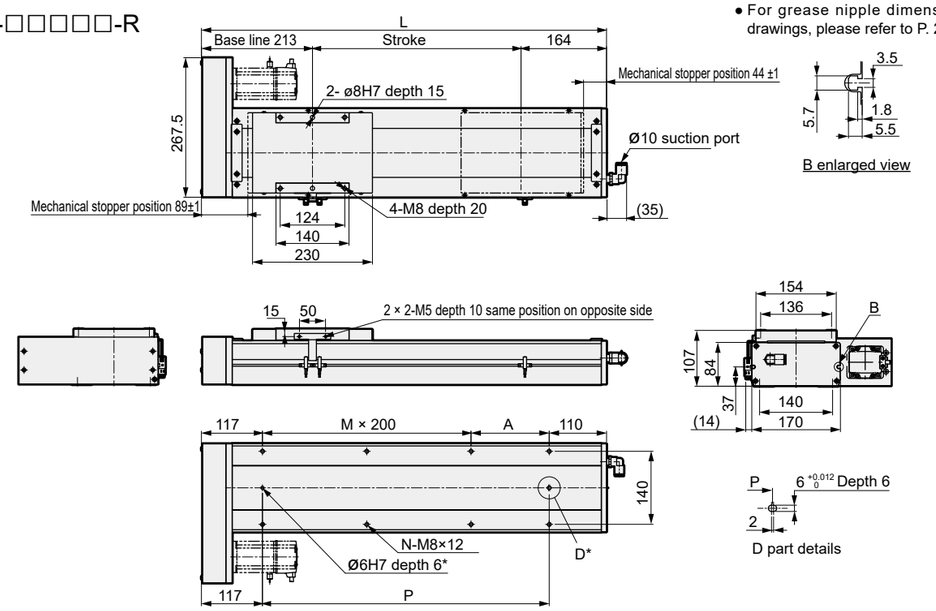

* positioning pin hole (option)

Stroke (mm)	50	100	150	200	250	300	350	400	450	500	550	600	650	700	750	800	850	900	950	1000	1050	1100	1150	1200	1250
L	427	477	527	577	627	677	727	777	827	877	927	977	1027	1077	1127	1177	1227	1277	1327	1377	1427	1477	1527	1577	1627
A	200	50	100	150	200	50	100	150	200	50	100	150	200	50	100	150	200	50	100	150	200	50	100	150	200
M	0	1	1	1	1	2	2	2	2	3	3	3	3	4	4	4	4	5	5	5	5	6	6	6	6
N	4	6	6	6	6	8	8	8	8	10	10	10	10	12	12	12	12	14	14	14	14	16	16	16	16
P	200	250	300	350	400	450	500	550	600	650	700	750	800	850	900	950	1000	1050	1100	1150	1200	1250	1300	1350	1400
Weight (kg)	12.6	13.4	14.2	15.0	15.8	16.6	17.4	18.1	18.9	19.7	20.5	21.3	22.1	22.9	23.6	24.4	25.2	26.0	26.8	27.6	28.4	29.1	29.9	30.7	31.5

Motor Mounting Part

● ECS-17-400 W-R

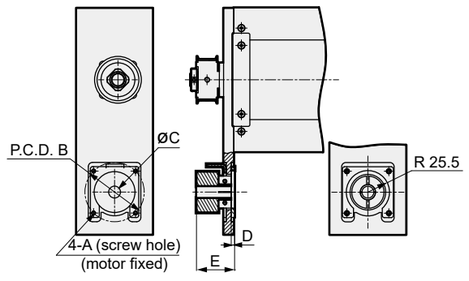

● ECS-17-750 W-R

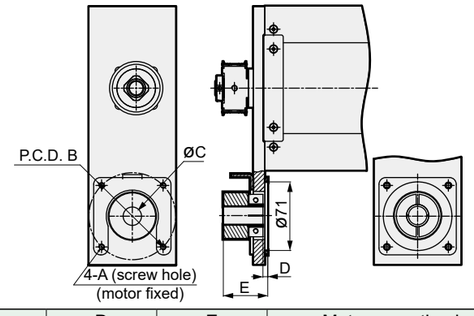

Mounting Motor Specification		A	B	C	D	E	Motor mounting bolt
M	400 W / 750 W	M5/M6	ø70/ø90	ø14/ø19	4/5	45/46	4-M5 x L18/4-M6 x L24
Y	400 W / 750 W	M5/M6	ø70/ø90	ø14/ø19	4/5	45/46	4-M5 x L18/4-M6 x L24
P	400 W / 750 W	M4/M5	ø70/ø90	ø14/ø19	4/5	45/46	4-M4 x L18/4-M5 x L24
F	400 W / 750 W	M5/M6	ø70/ø100	ø14/ø14	4/7	45/48	4-M5 x L18/4-M6 x L25

List of Accessories

[Motor Mounting Parts]

Mounting Motor Specification	Timing belt, pulley	Fitting	Motor Capacity	Motor mounting bolts Size	Motor mounting bolts Quantity
M	Shipped included	Shipped Included	400 W/ 750 W	M5/M6	4
Y				M5/M6	4
P				M4/M5	4
F				M5/M6	4

* For fitting details, please refer to P. 274.

[Home Sensor / Limit Sensor]

Manufacturer	Model	Quantity
OMRON	EE-SX672	3

* For sensor specifications, please refer to P. 270.

External Dimension Drawing Motor Bottom Side Fold-back Mounting

●ECS-17-□□□□□-D

● For grease nipple dimension drawings, please refer to P. 272.

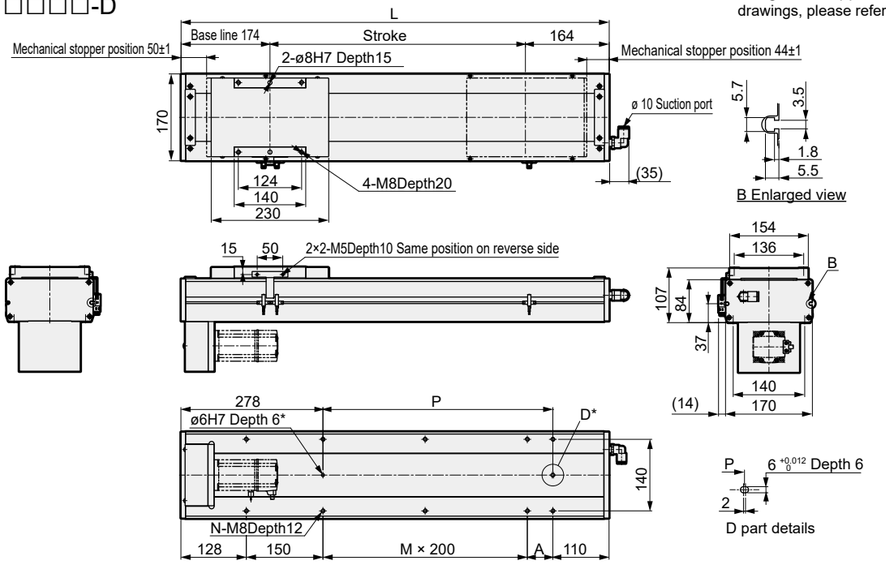

* Positioning pin hole (option)
Only round holes are available for positioning pin holes on stroke 50.

Stroke (mm)	50	100	150	200	250	300	350	400	450	500	550	600	650	700	750	800	850	900	950	1000	1050	1100	1150	1200	1250
L	388	438	488	538	588	638	688	738	788	838	888	938	988	1038	1088	1138	1188	1238	1288	1338	1388	1438	1488	1538	1588
A	0	50	100	150	200	50	100	150	200	50	100	150	200	50	100	150	200	50	100	150	200	50	100	150	200
M	0	0	0	0	0	1	1	1	1	2	2	2	2	3	3	3	3	4	4	4	4	5	5	5	5
N	4	6	6	6	6	8	8	8	8	10	10	10	10	12	12	12	12	14	14	14	14	16	16	16	16
P	0	50	100	150	200	250	300	350	400	450	500	550	600	650	700	750	800	850	900	950	1000	1050	1100	1150	1200
Weight (kg)	12.6	13.4	14.2	15.0	15.8	16.6	17.4	18.1	18.9	19.7	20.5	21.3	22.1	22.9	23.6	24.4	25.2	26.0	26.8	27.6	28.4	29.1	29.9	30.7	31.5

Motor Mounting Part

● ECS-17-400 W-D

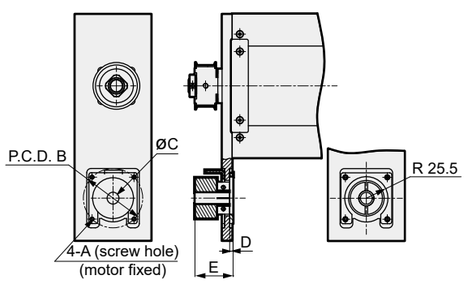

● ECS-17-750 W-D

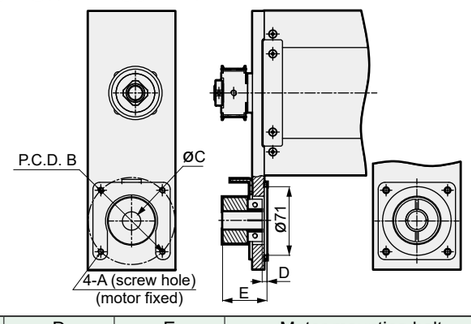

Mounting Motor Specification		A	B	C	D	E	Motor mounting bolt
M	400 W / 750 W	M5/M6	ø70/ø90	ø14/ø19	4/5	45/46	4-M5 x L18/4-M6 x L24
Y	400 W / 750 W	M5/M6	ø70/ø90	ø14/ø19	4/5	45/46	4-M5 x L18/4-M6 x L24
P	400 W / 750 W	M4/M5	ø70/ø90	ø14/ø19	4/5	45/46	4-M4 x L18/4-M5 x L24
F	400 W / 750 W	M5/M6	ø70/ø100	ø14/ø14	4/7	45/48	4-M5 x L18/4-M6 x L25

List of Accessories

[Motor Mounting Parts]

Mounting Motor Specification	Timing belt, pulley	Fitting	Motor Capacity	Motor mounting bolts	
				Size	Quantity
M	Shipped included	Shipped Included	400 W/ 750 W	M5/M6	4
Y				M5/M6	4
P				M4/M5	4
F				M5/M6	4

* For fitting details, please refer to P. 274.

[Home Sensor / Limit Sensor]

Manufacturer	Model	Quantity
OMRON	EE-SX672	3

* For sensor specifications, please refer to P. 270.

External Dimension Drawing Motor Left Side Fold-back Mounting

● ECS-17-□□□□□-L

● For grease nipple dimension drawings, please refer to P. 272.

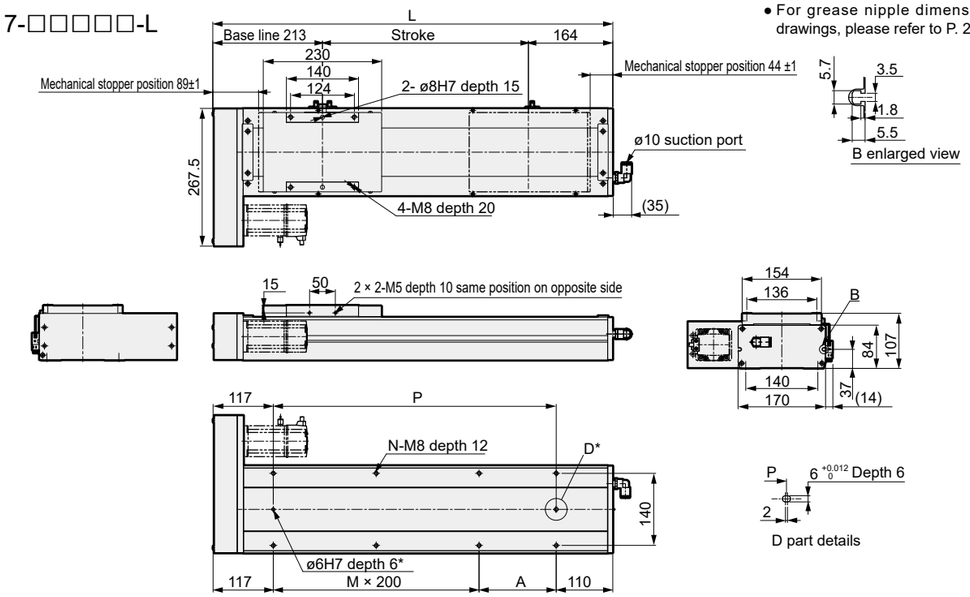

* positioning pin hole (option)

Stroke (mm)	50	100	150	200	250	300	350	400	450	500	550	600	650	700	750	800	850	900	950	1000	1050	1100	1150	1200	1250
L	427	477	527	577	627	677	727	777	827	877	927	977	1027	1077	1127	1177	1227	1277	1327	1377	1427	1477	1527	1577	1627
A	200	50	100	150	200	50	100	150	200	50	100	150	200	50	100	150	200	50	100	150	200	50	100	150	200
M	0	1	1	1	1	2	2	2	2	3	3	3	3	4	4	4	4	5	5	5	5	6	6	6	6
N	4	6	6	6	6	8	8	8	8	10	10	10	10	12	12	12	12	14	14	14	14	16	16	16	16
P	200	250	300	350	400	450	500	550	600	650	700	750	800	850	900	950	1000	1050	1100	1150	1200	1250	1300	1350	1400
Weight (kg)	12.6	13.4	14.2	15.0	15.8	16.6	17.4	18.1	18.9	19.7	20.5	21.3	22.1	22.9	23.6	24.4	25.2	26.0	26.8	27.6	28.4	29.1	29.9	30.7	31.5

Motor Mounting Part

● ECS-17-400 W-L

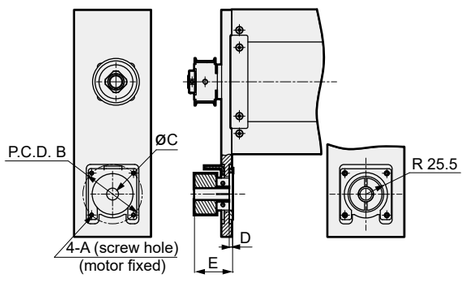

● ECS-17-750 W-L

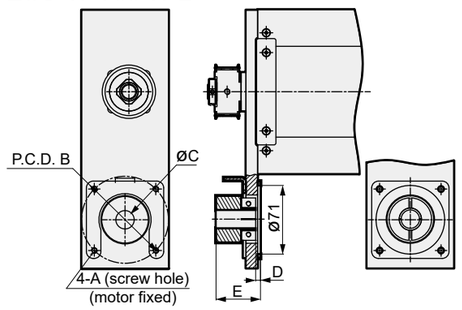

Mounting Motor Specification		A	B	C	D	E	Motor mounting bolt
M	400 W / 750 W	M5/M6	ø70/ø90	ø14/ø19	4/5	45/46	4-M5 x L18/4-M6 x L24
Y	400 W / 750 W	M5/M6	ø70/ø90	ø14/ø19	4/5	45/46	4-M5 x L18/4-M6 x L24
P	400 W / 750 W	M4/M5	ø70/ø90	ø14/ø19	4/5	45/46	4-M4 x L18/4-M5 x L24
F	400 W / 750 W	M5/M6	ø70/ø100	ø14/ø14	4/7	45/48	4-M5 x L18/4-M6 x L25

List of Accessories

[Motor Mounting Parts]

Mounting Motor Specification	Timing belt, pulley	Fitting	Motor Capacity	Motor mounting bolts	
				Size	Quantity
M	Shipped included	Shipped Included	400 W/ 750 W	M5/M6	4
Y				M5/M6	4
P				M4/M5	4
F				M5/M6	4

* For fitting details, please refer to P. 274.

[Home Sensor / Limit Sensor]

Manufacturer	Model	Quantity
OMRON	EE-SX672	3

* For sensor specifications, please refer to P. 270.

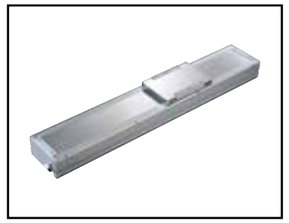

Electric Actuator Ball Screw Drive Slider Type Low Particle Emission Specification

ECS-22 Series

Motor Straight, Built-in Mounting Type

● Servo Motor Capacity : 750 W

Model No. Notation Method

ECS - 22 - 05 050 - E M 8 N N N N P

❶ ❷ ❸ ❹ ❺ ❻ ❼ ❽ ❾ ❿ ⓫

❶ Body Size

22	Body width 220 mm

❷ Screw Lead

05	5 mm
10	10 mm
25	25 mm
40	40 mm

❸ Stroke

005 to 150	100 mm (every 50 mm) 1500 mm

❹ Motor mounting direction *1

E	Straight Mounting
B	Built-in Mounting

❺ Mounting Motor Specifications

M, Y, P, F	Select the mounting motor specification from the table below.

❻ Motor Capacity

8	750 W

❼ Brake *1

N	None
B	Yes

❽ Origin sensor (1 pc) *2, *3, *4

N	None
A	Inside, motor side
B	Inside, opposite motor side
C	Outside, motor side
D	Outside, opposite motor side

❾ Limit sensor (2 pcs) *2, *3, *4

N	None
A	Inside
B	Outside

❿ Grease Nipple *4, *5

N	None (Body mounting direction: Standard)
R	Right direction
L	Left direction

⓫ Positioning pin hole

N	None
P	Yes

Manufacturer	750 W
Mitsubishi Electric Corporation	M
Delta Electronics, Inc.	M
Sanyo Denki Co., Ltd.	-
Yaskawa Electric Corporation	Y
Keyence Corporation	Y
Panasonic Corporation	P
OMRON Corporation	P
Fuji Electric Co., Ltd.	M
FANUC CORPORATION	F
Bosch Rexroth AG	P
Rockwell Automation, Inc.	M
SIEMENS AG	M

* Refer to P. 239 for motor model No.

*1 "Available" can only be selected when "Built-in mounting" is selected for the motor mounting method.
*2 The home sensor and limit sensor are a set. If either is "None," please select "None" for the other as well.
*3 If the sensor is mounted on the inside, the position cannot be adjusted by the customer. (Assembled shipment)
If the sensor is mounted on the outside, the position can be adjusted by the customer. (Shipped included)
*4 If you wish to use the home sensor, limit sensor, and grease nipple in the same direction, please contact us.
*5 Here, "Body mounting direction: Standard means mounting from the bottom.

Specifications

Applicable Motor Capacity		750 W Servo Motor		
Drive Method		Ball Screw ø25		ø20
Ball Screw Accuracy Grade		C7		
Stroke	mm	50 to 1500		
Screw lead	mm	5	10	25	40
Max. payload *1	Horizontal kg	150	150	120	60
	Vertical kg	55	45	20	10
Max. Speed	mm/s	250	500	1250	2000
Rated thrust *1	N	2100	1050	420	260
Repeatability	mm	±0.01			
Lost Motion	mm	0.1 or less			
Dynamic Allowable Load	N	14174			
Static Allowable Moment	N·m	MP: 2052 MY: 2052 MR: 1810			
Dynamic allowable moment	N·m	MP: 1098.5 MY: 1098.5 MR: 999.3			
Operating ambient temperature, humidity		0 to 40°C (no freezing) 35 to 80%RH (no condensation)			
Storage Ambient Temperature, Humidity		-10 to 50°C (no freezing) 35 to 80%RH (no condensation)			
Atmosphere		No corrosive gas, explosive gas, or dust			

*1 Rated thrust and maximum payload are guideline values, assuming that the motor mounted will output the rated torque.

Stroke and Max. Speed

(mm/s)

Screw Lead \ Stroke	100 to 900	1000	1100	1200	1300	1400	1500
5	250	225	200	175	150	125	100
10	500	450	400	350	300	250	200
25	1250	1125	1000	875	750	625	500

Screw Lead \ Stroke	100 to 850	950	1050	1150	1250	1350	1450	1500
40	2000	1800	1600	1400	1200	1000	800	600

* The max. speed is the speed when the motor mounted by the customer can output a rotation speed of 3000 rpm. The max. speed is restricted by the stroke. Do not operate at speeds exceeding the limit.

Allowable Overhang Length

* Refer to P. 266 for details.

Moment Direction

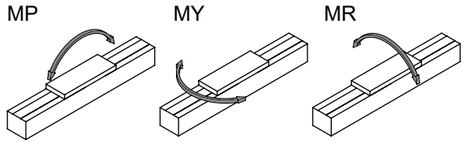

External Dimension Drawing Motor Straight Mounting

● ECS-22-□□□□□-E

● For grease nipple dimension drawings, please refer to P. 272.

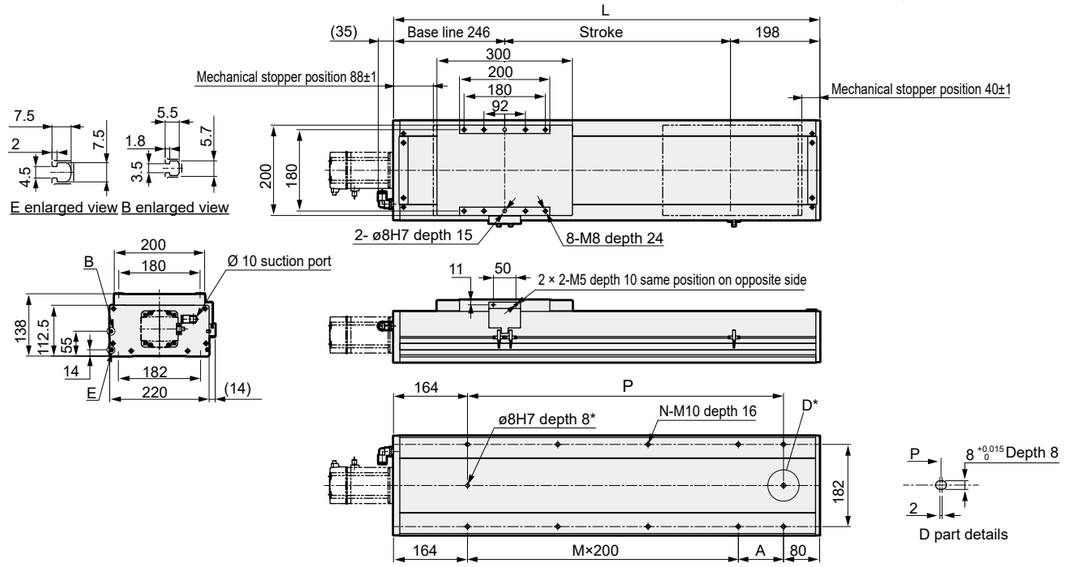

* positioning pin hole (option)

Stroke (mm)	50	100	150	200	250	300	350	400	450	500	550	600	650	700	750	800	850	900	950	1000	1050	1100	1150	1200	1250	1300	1350	1400	1450	1500
L	494	544	594	644	694	744	794	844	894	944	994	1044	1094	1144	1194	1244	1294	1344	1394	1444	1494	1544	1594	1644	1694	1744	1794	1844	1894	1944
A	50	100	150	200	50	100	150	200	50	100	150	200	50	100	150	200	50	100	150	200	50	100	150	200	50	100	150	200	50	100
M	1	1	1	1	2	2	2	2	3	3	3	3	4	4	4	4	5	5	5	5	6	6	6	6	7	7	7	7	8	8
N	6	6	6	6	8	8	8	8	10	10	10	10	12	12	12	12	14	14	14	14	16	16	16	16	18	18	18	18	20	20
P	250	300	350	400	450	500	550	600	650	700	750	800	850	900	950	1000	1050	1100	1150	1200	1250	1300	1350	1400	1450	1500	1550	1600	1650	1700
Weight (kg)	27.5	28.9	30.5	31.9	33.4	34.9	36.3	37.8	39.2	40.7	42.1	43.6	45.1	46.5	48.0	49.4	50.9	52.4	53.8	55.3	56.7	58.2	59.7	61.1	62.6	64.0	65.5	67.0	68.4	69.9

Motor Mounting Part

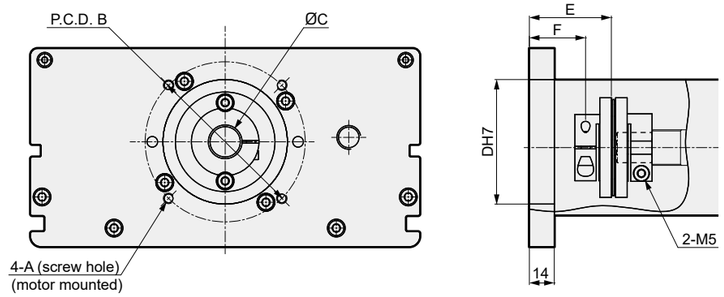

Mounting Motor Specification		A	B	C	D	E	F	Motor mounting bolt
M	750 W	M6	ø90	ø19	ø70	46.1	31.6	4-M6 x L16
Y	750 W	M6	ø90	ø19	ø70	46.1	31.6	4-M6 x L16
P	750 W	M5	ø90	ø19	ø70	46.1	31.6	4-M5 x L16
F	750 W	M6	ø100	ø14	ø80	29.7	15.2	4-M6 x L16

List of Accessories

[Motor Mounting Parts]

Mounting Motor Specification	Coupling	Fitting	Motor Capacity	Motor mounting bolts	
				Size	Quantity
M	Assembled shipment	Shipped Included	750 W	M6	4
Y				M6	4
P				M5	4
F				M6	4

* For fittings, refer to P. 274 for details.

[Home Sensor / Limit Sensor]

Manufacturer	Model	Quantity
OMRON	EE-SX672	3

* For sensor specifications, please refer to P. 270.

External Dimension Drawing Motor Built-in Mounting

● ECS-22-□□□□□-B

● For grease nipple dimension drawings, please refer to P. 272.

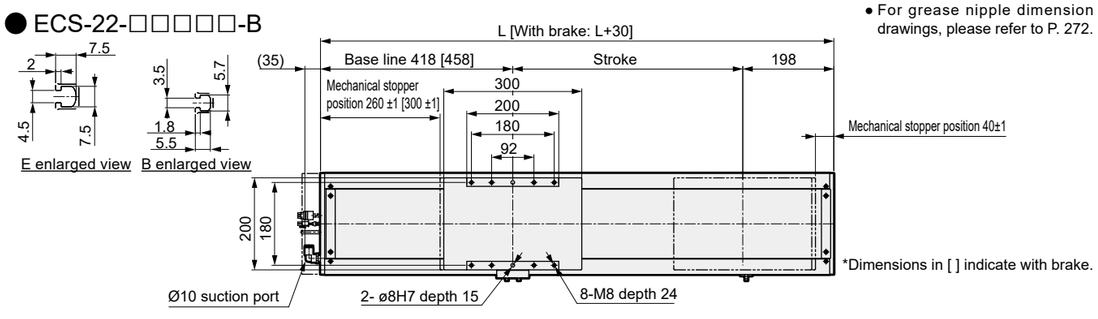

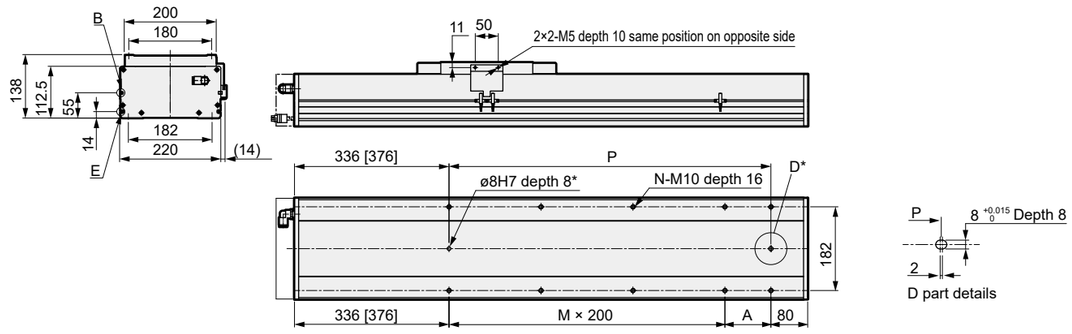

* positioning pin hole (option)

Stroke (mm)	50	100	150	200	250	300	350	400	450	500	550	600	650	700	750	800	850	900	950	1000	1050	1100	1150	1200	1250	1300	1350	1400	1450	1500
L	666	716	766	816	866	916	966	1016	1066	1116	1166	1216	1266	1316	1366	1416	1466	1516	1566	1616	1666	1716	1766	1816	1866	1916	1966	2016	2066	2116
A	50	100	150	200	50	100	150	200	50	100	150	200	50	100	150	200	50	100	150	200	50	100	150	200	50	100	150	200	50	100
M	1	1	1	1	2	2	2	2	3	3	3	3	4	4	4	4	5	5	5	5	6	6	6	6	7	7	7	7	8	8
N	6	6	6	6	8	8	8	8	10	10	10	10	12	12	12	12	14	14	14	14	16	16	16	16	18	18	18	18	20	20
P	250	300	350	400	450	500	550	600	650	700	750	800	850	900	950	1000	1050	1100	1150	1200	1250	1300	1350	1400	1450	1500	1550	1600	1650	1700
Weight (kg)	26.0	31.3	32.7	34.2	35.7	37.1	38.6	40.1	41.6	43.0	44.5	46.0	47.4	48.9	50.4	51.8	53.3	54.8	56.3	57.7	59.2	60.7	62.1	63.6	65.1	66.5	68.0	69.5	71.0	72.4

Motor Mounting Part

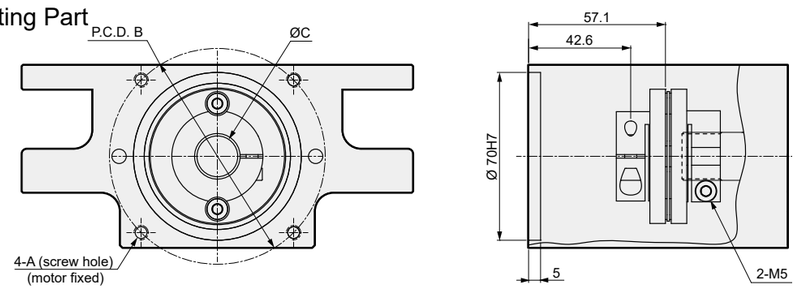

Mounting Motor Specification		A	B	C	Motor mounting bolt
M	750 W	M6	ø90	ø19	4-M6 x L16
Y	750 W	M6	ø90	ø19	4-M6 x L16
P	750 W	M5	ø90	ø19	4-M5 x L16

List of Accessories

[Motor Mounting Parts]

Mounting Motor Specification	Coupling	Fitting	Motor Capacity	Motor mounting bolts	
				Size	Quantity
M	Assembled shipment	Shipped Included	750 W	M6	4
Y				M6	4
P				M5	4

* For fittings, refer to P. 274 for details.

[Home Sensor / Limit Sensor]

Manufacturer	Model	Quantity
OMRON	EE-SX672	3

* For sensor specifications, please refer to P. 270.

MEMO

Electric Actuator Ball Screw Drive Slider Type Low Particle Emission Specification

ECS-22 Series

Motor Fold-back Mounting Type

● Servo Motor Capacity : 750 W

Model No. Notation Method

ECS - 22 - 05 040 - R M 8 N N N N P

❶ ❷ ❸ ❹ ❺ ❻ ❼ ❽ ❾ ❿ ⓫

❶ Body Size

22	Body width 220 mm

❷ Screw Lead

05	5 mm
10	10 mm
25	25 mm
40	40 mm

❸ Stroke

005 to 150	50 mm (every 50 mm) 1500 mm

❹ Motor Mounting Direction

R	Right Side Return Mount
D	Bottom Side Return Mount
L	Left Side Fold-back Mounting

❺ Mounting Motor Specifications

M	Select the mounting motor specification from the table below.
Y	
P	
F	

❻ Motor Capacity

8	750 W

❼ Brake

N	None

❽ Origin sensor (1 pc) *1, *2, *3

N	None
A	Inside, motor side
B	Inside, opposite motor side
C	Outside, motor side
D	Outside, opposite motor side

❾ Limit sensor (2 pcs) *1, *2, *3

N	None
A	Inside
B	Outside

❿ Grease nipple *3, *4, *5

N	None (Body mounting direction: Standard)
R	Right direction
L	Left direction

⓫ Positioning pin hole

N	None
P	Yes

Manufacturer	750 W
Mitsubishi Electric Corporation	M
Delta Electronics, Inc.	M
Sanyo Denki Co., Ltd.	-
Yaskawa Electric Corporation	Y
Keyence Corporation	Y
Panasonic Corporation	P
OMRON Corporation	P
Fuji Electric Co., Ltd.	M
FANUC CORPORATION	F
Bosch Rexroth AG	P
Rockwell Automation, Inc.	M
SIEMENS AG	M

* Refer to P. 239 for motor model No.

*1 The home sensor and limit sensor are a set. If either is "None," please select "None" for the other as well.
*2 If the sensor is mounted on the inside, the position cannot be adjusted by the customer. (Assembled shipment)
If the sensor is mounted on the outside, the position can be adjusted by the customer. (Shipped included)
*3 If you wish to use the home sensor, limit sensor, and grease nipple in the same direction, please contact us.
*4 Here, "Body mounting direction: Standard means mounting from the bottom.
*5 If "R" is selected for the motor mounting direction, "R" cannot be selected for the grease nipple.
If "L" is selected, "L" cannot be selected for the grease nipple.

Specifications

Applicable Motor Capacity		750 W Servo Motor			
Drive Method		Ball Screw ø25			ø20
Ball Screw Accuracy Grade		C7			
Stroke	mm	50 to 1500			
Screw lead	mm	5	10	25	40
Max. payload *1	Horizontal kg	150	150	120	60
	Vertical kg	55	45	20	10
Max. Speed	mm/s	250	500	1250	2000
Rated thrust *1	N	2100	1050	420	260
Repeatability	mm	±0.01			
Lost Motion	mm	0.1 or less			
Dynamic Allowable Load	N	14174			
Static Allowable Moment	N·m	MP : 2052 MY : 2052 MR : 1810			
Dynamic allowable moment	N·m	MP : 1098.5 MY : 1098.5 MR : 999.3			
Operating ambient temperature, humidity		0 to 40°C (no freezing) 35 to 80%RH (no condensation)			
Storage Ambient Temperature, Humidity		-10 to 50°C (no freezing) 35 to 80%RH (no condensation)			
Atmosphere		No corrosive gas, explosive gas, or dust			

*1 Rated thrust and maximum payload are guideline values, assuming that the motor mounted will output the rated torque.

Stroke and Max. Speed

(mm/s)

Screw Lead \ Stroke	100 to 900	1000	1100	1200	1300	1400	1500
5	250	225	200	175	150	125	100
10	500	450	400	350	300	250	200
25	1250	1125	1000	875	750	625	500

Screw Lead \ Stroke	100 to 850	950	1050	1150	1250	1350	1450	1500
40	2000	1800	1600	1400	1200	1000	800	600

* The max. speed is the speed when the motor mounted by the customer can output a rotation speed of 3000 rpm. The max. speed is restricted by the stroke. Do not operate at speeds exceeding the limit.

Allowable Overhang Length

* Refer to P. 266 for details.

Moment Direction

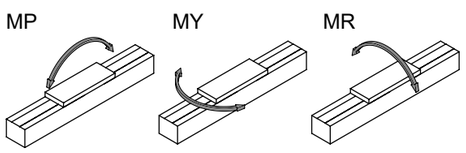

External Dimension Drawing Motor Right Side Fold-back Mounting

● ECS-22-□□□□□-R

● For grease nipple dimension drawings, please refer to P. 272.

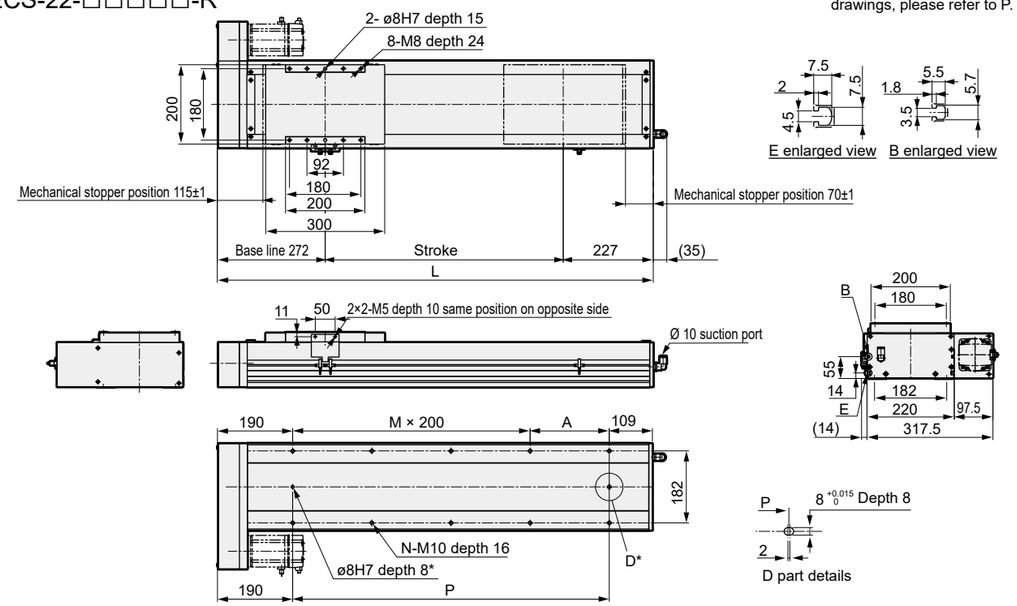

Stroke (mm)	50	100	150	200	250	300	350	400	450	500	550	600	650	700	750	800	850	900	950	1000	1050	1100	1150	1200	1250	1300	1350	1400	1450	1500
L	549	599	649	699	749	799	849	899	949	999	1049	1099	1149	1199	1249	1299	1349	1399	1449	1499	1549	1599	1649	1699	1749	1799	1849	1899	1949	1999
A	50	100	150	200	50	100	150	200	50	100	150	200	50	100	150	200	50	100	150	200	50	100	150	200	50	100	150	200	50	100
M	1	1	1	1	2	2	2	2	3	3	3	3	4	4	4	4	5	5	5	5	6	6	6	6	7	7	7	7	8	8
N	6	6	6	6	8	8	8	8	10	10	10	10	12	12	12	12	14	14	14	14	16	16	16	16	18	18	18	18	20	20
P	250	300	350	400	450	500	550	600	650	700	750	800	850	900	950	1000	1050	1100	1150	1200	1250	1300	1350	1400	1450	1500	1550	1600	1650	1700
Weight (kg)	26.0	30.1	31.6	33.0	34.5	35.9	37.4	38.9	40.3	41.8	43.2	44.7	46.2	47.6	49.1 k	50.5	52.0	53.5	54.9	56.4	57.8	59.3	60.8	62.2	63.7	65.1	66.6	68.1	69.5	71.0

Motor Mounting Part

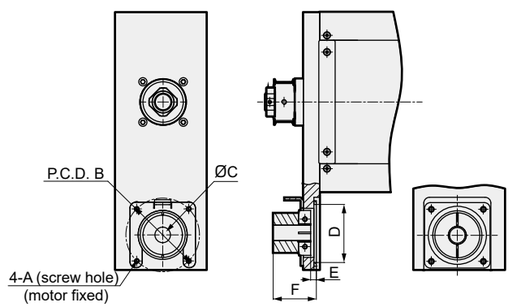

Mounting Motor Specification		A	B	C	D	E	F	Motor mounting bolt
M	750 W	M6	ø90	ø19	ø71	7	52.8	4-M6 x L24
Y	750 W	M6	ø90	ø19	ø71	7	52.8	4-M6 x L24
P	750 W	M5	ø90	ø19	ø71	7	52.8	4-M5 x L24
F	750 W	M6	ø100	ø14	ø81	8	53.8	4-M6 x L25

List of Accessories

[Motor Mounting Parts]

Mounting Motor Specification	Timing belt, pulley	Fitting	Motor Capacity	Motor mounting bolts	
				Size	Quantity
M	Shipped included	Shipped Included	750 W	M6	4
Y				M6	4
P				M5	4
F				M6	4

* For fittings, refer to P. 274 for details.

[Home Sensor / Limit Sensor]

Manufacturer	Model	Quantity
OMRON	EE-SX672	3

* For sensor specifications, please refer to P. 270.

External Dimension Drawing Motor Bottom Side Fold-back Mounting

● ECS-22-□□□□□-D

• For grease nipple dimension drawings, please refer to P. 272.

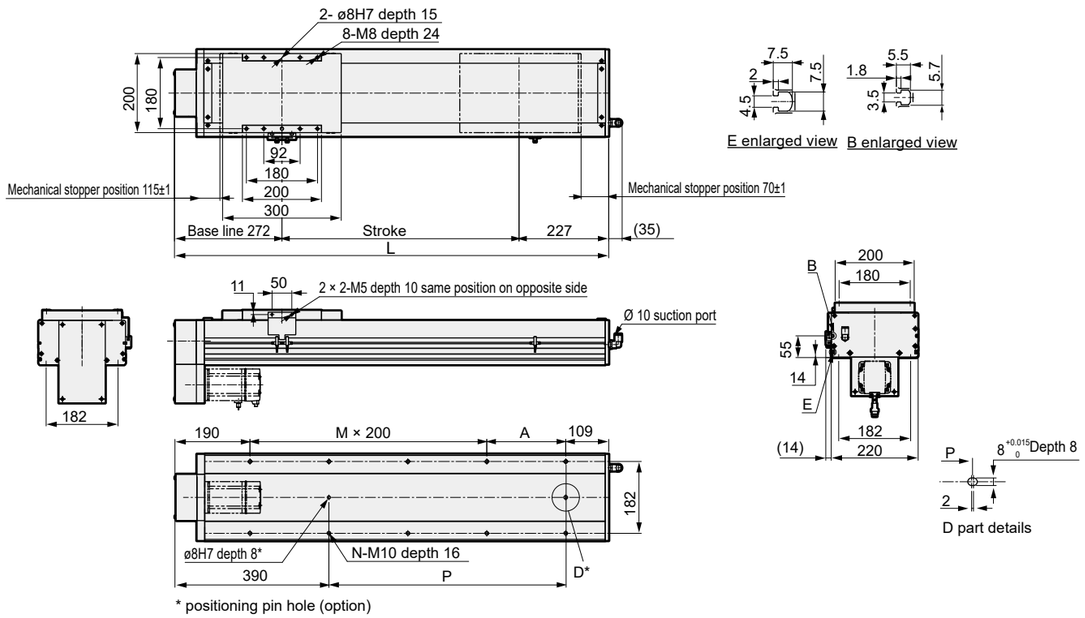

* positioning pin hole (option)

Stroke (mm)	50	100	150	200	250	300	350	400	450	500	550	600	650	700	750	800	850	900	950	1000	1050	1100	1150	1200	1250	1300	1350	1400	1450	1500
L	549	599	649	699	749	799	849	899	949	999	1049	1099	1149	1199	1249	1299	1349	1399	1449	1499	1549	1599	1649	1699	1749	1799	1849	1899	1948	1999
A	50	100	150	200	50	100	150	200	50	100	150	200	50	100	150	200	50	100	150	200	50	100	150	200	50	100	150	200	50	100
M	1	1	1	1	2	2	2	2	3	3	3	3	4	4	4	4	5	5	5	5	6	6	6	6	7	7	7	7	8	8
N	6	6	6	6	8	8	8	8	10	10	10	10	12	12	12	12	14	14	14	14	16	16	16	16	18	18	18	18	20	20
P	50	100	150	200	250	300	350	400	450	500	550	600	650	700	750	800	850	900	950	1000	1050	1100	1150	1200	1250	1300	1350	1400	1450	1500
Weight (kg)	27.5	30.1	31.6	33.0	34.5	35.9	37.4	38.9	40.3	41.8	43.2	44.7	46.2	47.6	49.1 k	50.5	52.0	53.5	54.9	56.4	57.8	59.3	60.8	62.2	63.7	65.1	66.6	68.1	69.5	71.0

Motor Mounting Part

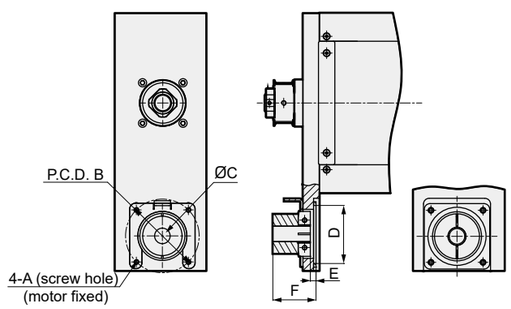

Mounting Motor Specification		A	B	C	D	E	F	Motor mounting bolt
M	750 W	M6	ø90	ø19	ø71	7	52.8	4-M6 x L24
Y	750 W	M6	ø90	ø19	ø71	7	52.8	4-M6 x L24
P	750 W	M5	ø90	ø19	ø71	7	52.8	4-M5 x L24
F	750 W	M6	ø100	ø14	ø81	8	53.8	4-M6 x L25

List of Accessories

[Motor Mounting Parts]

Mounting Motor Specification	Timing belt, pulley	Fitting	Motor Capacity	Motor mounting bolts	
				Size	Quantity
M	Shipped included	Shipped Included	750 W	M6	4
Y				M6	4
P				M5	4
F				M6	4

* For fittings, refer to P. 274 for details.

[Home Sensor / Limit Sensor]

Manufacturer	Model	Quantity
OMRON	EE-SX672	3

* For sensor specifications, please refer to P. 270.

External Dimension Drawing Motor Left Side Fold-back Mounting

● ECS-22-□□□□□-L

• For grease nipple dimension drawings, please refer to P. 272.

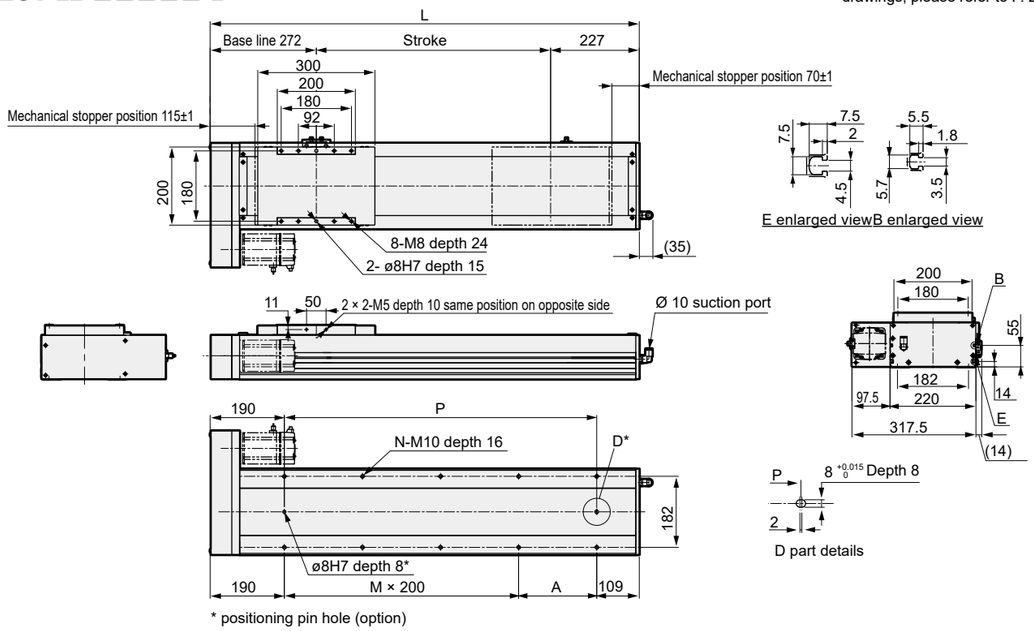

* positioning pin hole (option)

Stroke (mm)	50	100	150	200	250	300	350	400	450	500	550	600	650	700	750	800	850	900	950	1000	1050	1100	1150	1200	1250	1300	1350	1400	1450	1500
L	549	599	649	699	749	799	849	899	949	999	1049	1099	1149	1199	1249	1299	1349	1399	1449	1499	1549	1599	1649	1699	1749	1799	1849	1899	1949	1999
A	50	100	150	200	50	100	150	200	50	100	150	200	50	100	150	200	50	100	150	200	50	100	150	200	50	100	150	200	50	100
M	1	1	1	1	2	2	2	2	3	3	3	3	4	4	4	4	5	5	5	5	6	6	6	6	7	7	7	7	8	8
N	6	6	6	6	8	8	8	8	10	10	10	10	12	12	12	12	14	14	14	14	16	16	16	16	18	18	18	18	20	20
P	250	300	350	400	450	500	550	600	650	700	750	800	850	900	950	1000	1050	1100	1150	1200	1250	1300	1350	1400	1450	1500	1550	1600	1650	1700
Weight (kg)	26.0	30.1	31.6	33.0	34.5	35.9	37.4	38.9	40.3	41.8	43.2	44.7	46.2	47.6	49.1 k	50.5	52.0	53.5	54.9	56.4	57.8	59.3	60.8	62.2	63.7	65.1	66.6	68.1	69.5	71.0

Motor Mounting Part

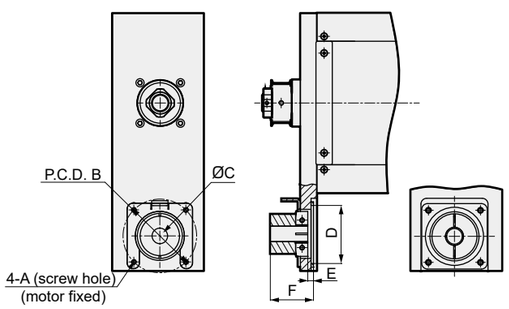

Mounting Motor Specification		A	B	C	D	E	F	Motor mounting bolt
M	750 W	M6	ø90	ø19	ø71	7	52.8	4-M6 xL24
Y	750 W	M6	ø90	ø19	ø71	7	52.8	4-M6 xL24
P	750 W	M5	ø90	ø19	ø71	7	52.8	4-M5 xL24
F	750 W	M6	ø100	ø14	ø81	8	53.8	4-M6 xL25

List of Accessories

[Motor Mounting Parts]

Mounting Motor Specification	Timing belt, pulley	Fitting	Motor Capacity	Motor mounting bolts	
				Size	Quantity
M	Shipped included	Shipped Included	750 W	M6	4
Y				M6	4
P				M5	4
F				M6	4

* For fittings, refer to P. 274 for details.

[Home Sensor / Limit Sensor]

Manufacturer	Model	Quantity
OMRON	EE-SX672	3

* For sensor specifications, please refer to P. 270.

Model Selection

STEP-1 Confirmation of Payload

Payload varies depending on the mounting orientation and screw lead. Select the size and screw lead by referring to the selection table (P. 236) and the specification table for each model.

STEP-2 Confirmation of Positioning Time

Calculate the positioning time for the selected product according to the example below and check if it meets the required tact time. Select the speed and acceleration/deceleration from the specification table for each model and the motor selected by the customer.

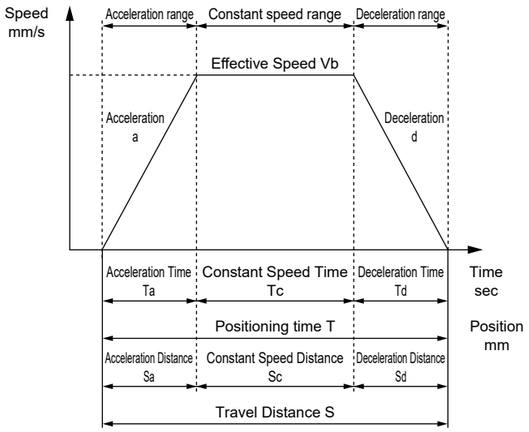

	Content	Code	Unit	Remarks
Setting Value	Set Speed	V	mm/s	
	Set Acceleration	a	mm/s^2	
	Set Deceleration	d	mm/s^2	
	Travel Distance	S	mm	
Calculated Value	Reached Speed	Vmax	mm/s	$= \{2 \times a \times d \times S / (a + d)\}^{1/2}$
	Effective Speed	Vb	mm/s	The smaller of V and Vmax
	Acceleration Time	Ta	s	= Vb/a [0.2 sec or more]
	Deceleration Time	Td	s	= Vb/d [0.2 sec or more]
	Constant Speed Time	Tc	s	= Sc / Vb
	Acceleration Distance	Sa	mm	$= (a \times Ta^2) / 2$
	Deceleration Distance	Sd	mm	$= (d \times Td^2) / 2$
	Constant Speed Distance	Sc	mm	= S - (Sa + Sd)
	Positioning Time	T	s	= Ta + Tc + Td

* Do not use at speeds exceeding the specifications.
* Acceleration/deceleration setting by acceleration/deceleration time varies with set speed and stroke.
* Depending on the acceleration/deceleration and stroke, a trapezoidal velocity waveform may not be formed (the set speed may not be reached). In that case, select the smaller of the set speed (V) and the reached speed (Vmax) as the effective speed (Vb).
* Please use an acceleration/deceleration time of 0.2 sec or more.
* 1 G ≈ 9.8 m/s^2.

STEP-3 Confirming Allowable Overhang Length

Confirm that the overhang length of the load during operation is within the allowable overhang length (P. 266 to 268).

For details on selection, please check the "Model Selection System" on the CKD website or contact our sales representative.

Introduction to the Model Selection System on our website

[For confirmation via PC]

(https://www.ckd.co.jp/kiki/en/selection_system/)

[For confirmation via iPad or smartphone]

* May not display correctly depending on the smartphone's usage environment.

MEMO

Allowable Overhang Length (ECS Series)

[Horizontal Installation]

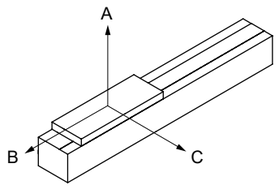

[Allowable Overhang Length]

● ECS-14 (200 W)

Motor Mounting	Acceleration/ Deceleration Time sec	Screw Lead	Payload kg	Overhang mm A	B	C
Straight · Fold-back	0.2	5	60	2300	250	240
			80	1600	180	170
			95	1150	145	140
		10	30	2000	500	450
			50	1400	280	250
			75	1000	170	160
		16	10	2200	1200	1000
			20	1600	600	500
			44	800	260	220
		20	10	2300	1200	1000
			20	1400	600	500
			35	1000	330	290

● ECS-17 (750 W)

Motor Mounting	Acceleration/ Deceleration Time sec	Screw Lead	Payload kg	Overhang mm A	B	C
Straight · Fold-back	0.2	5	60	3300	410	470
			100	2000	230	260
			120	1700	180	210
		10	60	2300	400	440
			75	1850	310	350
			95	1450	230	270
		20	30	2000	650	620
			50	1150	370	370
			83	650	210	210
		40	10	1650	1150	850
			20	530	350	270
			50	300	190	150

● ECS-14 (400 W)

Motor Mounting	Acceleration/ Deceleration Time sec	Screw Lead	Payload kg	Overhang mm A	B	C
Straight · Fold-back	0.2	5	60	2300	250	240
			80	1600	180	170
			110	1150	120	115
		10	30	2000	500	450
			50	1400	280	250
			88	700	140	125
		16	10	2200	1200	1000
			20	1600	600	500
			48	800	260	220
		20	10	2300	1200	1000
			20	1400	600	500
			40	600	280	230

● ECS-22

Motor Mounting	Acceleration/ Deceleration Time sec	Screw Lead	Payload kg	Overhang mm A	B	C
Straight · Fold-back	0.2	5	60	3600	650	650
			100	2800	350	340
			150	2300	260	230
		10	60	2850	960	810
			100	2000	570	460
			150	1450	340	310
		25	50	2000	850	610
			80	1200	500	360
			120	770	300	220
		40	10	4200	2850	1850
			30	1400	900	600
			60	650	420	270

* For ceiling-mounted use, please select 1/3 of the max. payload, static allowable moment, dynamic allowable load, dynamic allowable moment, and overhang length. Please use the overhang length to the load's center of gravity within each A, B, and C direction.

● ECS-17 (400 W)

Motor Mounting	Acceleration/ Deceleration Time sec	Screw Lead	Payload kg	Overhang mm A	B	C
Straight · Fold-back	0.2	5	60	2950	400	475
			100	2000	220	265
			110	1850	200	240
		10	60	1600	350	400
			75	1350	270	320
			90	1050	220	230
		20	30	1850	650	650
			50	1100	380	380
			75	700	240	240
		40	10	1700	1150	900
			20	850	550	430
			35	450	300	240

Allowable Overhang Length (ECS Series)

[When Wall-Mounted]

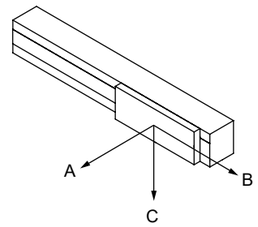

[Allowable Overhang Length]

● ECS-14 (200 W)

Motor Mounting	Acceleration/ Deceleration Time sec	Screw Lead	Payload kg	Overhang mm A	B	C
Straight · Fold-back	0.2	5	60	240	250	1600
			80	170	180	1200
			95	140	145	1050
		10	30	420	460	1500
			50	240	250	1000
			75	150	160	700
		16	10	1050	1200	2650
			20	500	620	1450
			44	230	270	800
		20	10	1000	1200	1900
			20	500	600	1000
			35	270	300	600

● ECS-17 (750 W)

Motor Mounting	Acceleration/ Deceleration Time sec	Screw Lead	Payload kg	Overhang mm A	B	C
Straight · Fold-back	0.2	5	60	500	430	2700
			100	280	240	1650
			120	230	200	1350
		10	60	420	380	2300
			75	330	300	1800
			95	250	230	1400
		20	30	640	650	1700
			50	370	380	1000
			83	210	210	560
		40	10	900	1150	1700
			20	280	350	550
			50	160	195	310

● ECS-14 (400 W)

Motor Mounting	Acceleration/ Deceleration Time sec	Screw Lead	Payload kg	Overhang mm A	B	C
Straight · Fold-back	0.2	5	60	240	250	1600
			80	170	180	1200
			110	115	120	1050
		10	30	420	460	1500
			50	240	250	1000
			88	120	130	700
		16	10	1050	1200	2650
			20	500	620	1450
			48	200	230	800
		20	10	1000	1200	1900
			20	500	600	1000
			40	230	290	600

● ECS-22

Motor Mounting	Acceleration/ Deceleration Time sec	Screw Lead	Payload kg	Overhang mm A	B	C
Straight · Fold-back	0.2	5	60	940	1100	3850
			100	540	620	2450
			150	340	400	2150
		10	60	800	980	3700
			100	460	540	2200
			150	280	350	1450
		25	50	600	790	1950
			80	360	480	1200
			120	220	290	750
		40	10	1950	2900	3500
			30	620	950	1400
			60	290	430	650

* For ceiling-mounted use, please select 1/3 of the max. payload, static allowable moment, dynamic allowable load, dynamic allowable moment, and overhang length. Please use the overhang length to the load's center of gravity within each A, B, and C direction.

● ECS-17 (400 W)

Motor Mounting	Acceleration/ Deceleration Time sec	Screw Lead	Payload kg	Overhang mm A	B	C
Straight · Fold-back	0.2	5	60	500	420	2450
			100	280	240	1600
			110	250	215	1400
		10	60	420	380	1950
			75	330	300	1500
			90	270	240	1200
		20	30	650	650	1600
			50	375	380	900
			75	245	240	600
		40	10	900	1100	1750
			20	450	550	850
			35	240	300	470

Allowable Overhang Length (ECS Series)

[Vertical Installation]

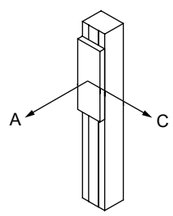

[Allowable Overhang Length]

● ECS-14 (200 W)

Motor Mounting	Acceleration/ Deceleration Time sec	Screw Lead	Payload kg	Overhang mm A	Overhang mm C
Straight · Fold-back	0.2	5	20	755	755
			25	605	605
			27	560	560
		10	10	1350	1350
			15	900	900
			18	750	750
		16	2	2400	2400
			4	1700	1700
			7	1300	1300
		20	6	1200	1200

● ECS-14 (400 W)

Motor Mounting	Acceleration/ Deceleration Time sec	Screw Lead	Payload kg	Overhang mm A	Overhang mm C
Straight · Fold-back	0.2	5	20	755	755
			25	605	605
			33	455	455
		10	10	1350	1350
			15	900	900
			22	650	650
		16	2	2400	2400
			4	1700	1700
			10	1000	1000
		20	4	1800	1800
			6	1200	1200
			8	900	900

● ECS-17 (400 W)

Motor Mounting	Acceleration/ Deceleration Time sec	Screw Lead	Payload kg	Overhang mm A	Overhang mm C
Straight · Fold-back	0.2	5	20	1400	1400
			30	950	950
			40	700	700
		10	15	1700	1700
			25	1000	1000
			30	850	850
		20	5	2000	2000
			10	1800	1800
			14	1400	1400
		40	5	650	650

● ECS-17 (750 W)

Motor Mounting	Acceleration/ Deceleration Time sec	Screw Lead	Payload kg	Overhang mm A	Overhang mm C
Straight · Fold-back	0.2	5	20	1500	1500
			30	1000	1000
			50	600	600
		10	15	1700	1700
			25	1000	1000
			40	620	620
		20	5	2200	2200
			10	1900	1900
			25	730	730
		40	10	700	700

● ECS-22

Motor Mounting	Acceleration/ Deceleration Time sec	Screw Lead	Payload kg	Overhang mm A	Overhang mm C
Straight · Fold-back	0.2	5	30	2400	2400
			50	1450	1450
			55	1050	1050
		10	20	3,000	3,000
			30	2000	2000
			45	1350	1350
		25	15	2600	2600
			20	1950	1950
		40	5	2600	2600
			10	1950	1950

* For ceiling-mounted use, please select 1/3 of the max. payload, static allowable moment, dynamic allowable load, dynamic allowable moment, and overhang length. Please use the overhang length to the load's center of gravity within each A, B, and C direction.

MEMO

Servo motor compatible
EBS
EBR
ETS
ETS Multi Axis
ECS
ETV
ECV
EKS
ESM
Ending

Home Sensor, Limit Sensor

	Manufacturer	Model
Outer mounting sensor	OMRON	EE-SX672
Inner mounting sensor	OMRON	EE-SX674

Performance

Item	Specifications
Hysteresis	0.025 mm or less
Light source (peak emission wavelength)	GaAs infrared emitting diode (940 nm)
Indicator Light	Lights up when light is received (red)
Power Supply Voltage	5 to 24 VDC ±10% Ripple (p-p) 10% or less
Current Consumption	35 mA or less (NPN type)
Control output	NPN type : NPN open collector output 5 to 24 VDC 100 mA or less Off-state current 0.5 mA or less, residual voltage 0.8 V or less (at load current 100 mA) Residual voltage: 0.4 V or less (with 40 mA load current)
Ambient illuminance	Illuminance at Light-Receiving Surface: Fluorescent Lamp: 1000 lx or less
Ambient Temperature Range	Operating : -25 to +55°C Storage: -30 to +80°C (however, no freezing or condensation)
Ambient humidity range	Operating : 5 to 85%RH Storage: 5 to 95%RH (however, no freezing or condensation)
Enclosure	IP50 IEC60529 standard
Cord length	2 m (Connector with cord (EE-1006 2 M))

Output circuit

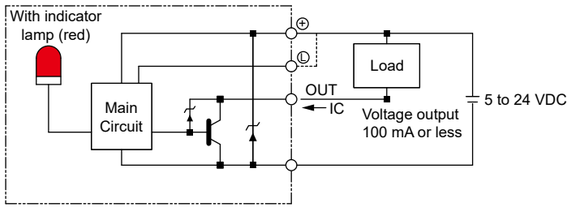

Wiring Diagram

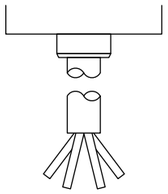

Terminal arrangement

Brown	5 to 24 VDC
Pink	L
Blue	0 V
Black	OUTPUT

Sensor Dog Dimension Drawing

Body Size	E/D/B	Motor Mounting Direction			
		R		L	
		Without grease nipple	With grease nipple	Without grease nipple	With grease nipple
ECS-14	Fig. 1	Fig. 1	Fig. 2	Fig. 1	Fig. 2
ECS-17	Fig. 1	Fig. 1	Fig. 2	Fig. 1	Fig. 2
ECS-22	Fig. 3	Fig. 3		Fig. 3	

Fig. 1

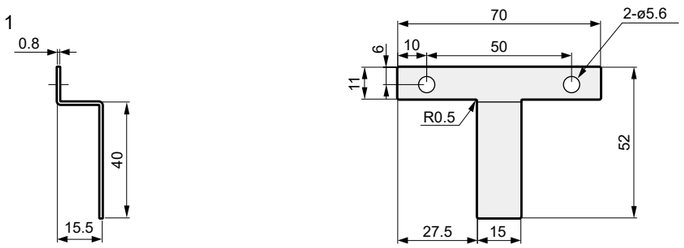

Fig. 2

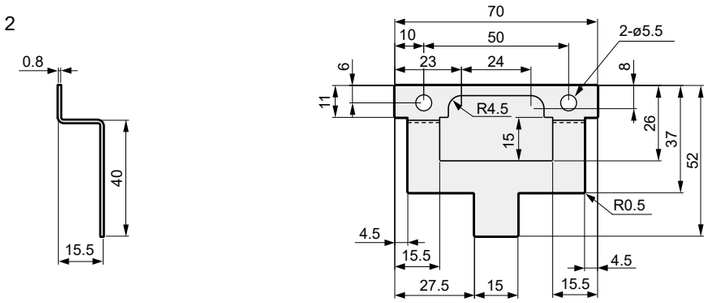

Fig. 3

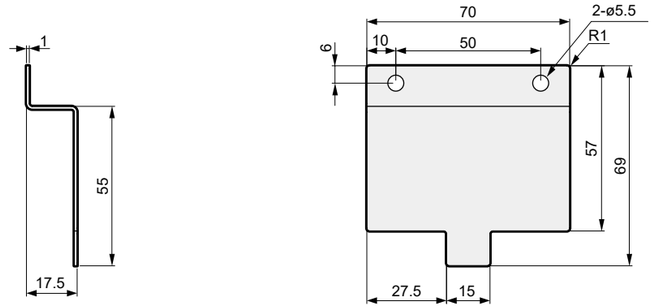

Grease Nipple Dimension Drawing

* Symmetrical with respect to the actuator.

● ECS-14

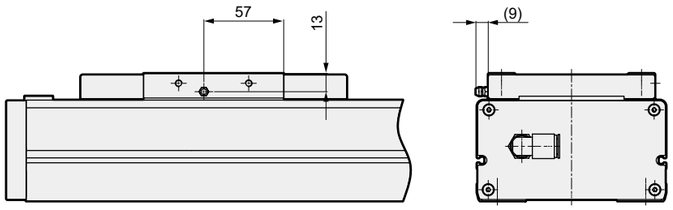

● ECS-17

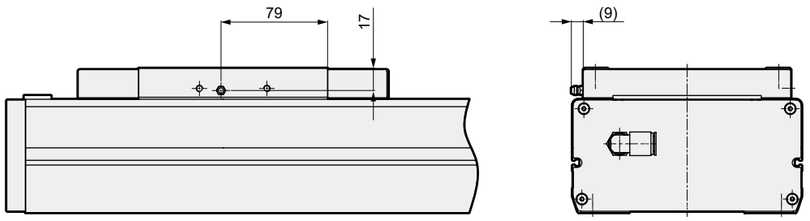

● ECS-22

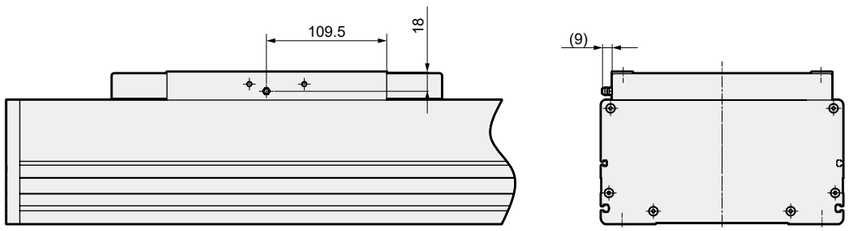

MEMO

Servo motor compatible
EBS
EBR
ETS
ETS Multi Axis
ECS
ETV
ECV
EKS
ESM
Ending

List of Accessories

Basic Type

Motor Mounting Bolts (Common for all motor mounting directions)

Model No.	Mounting Motor Specification	Motor Capacity	Size	Quantity
ECS-14	M	200 W 400 W	M5	4
	Y		M5	4
	P		M4	4
	F		M5	4
ECS-17	M	400 W	M5	4
	Y		M5	4
	P		M4	4
	F		M5	4
	M	750 W	M6	4
	Y		M6	4
	P		M5	4
	F		M6	4
ECS-22	M	750 W	M6	4
	Y		M6	4
	P		M5	4
	F		M6	4

By Motor Mounting Direction

Model No.	Attached Part Name	Attached Quantity
E (External direct mounting) B (Built-in)	Coupling (Shipped Included)	1 pc
R (Right fold-back mounting) L (Left fold-back mounting) D (Bottom fold-back mounting)	Timing Belt	1 pc.
	Pulley	1 pc

When home/limit sensor is selected *1

Sensor mounting direction	Shipment Form	Quantity
Inner sensor	Shipped assembled in fixed position	3 pcs. *2
Outer sensor	Shipped included *3	

*1 The shipping form for the home and limit sensors varies depending on whether they are mounted inside or outside.
*2 If "None" is selected for either the home sensor or the limit sensor, the other will also be "None".
*3 Sensor mounting screws are also attached.

Fitting for Suction Port

Model No.	Fitting Model Number	Shipment Form	Quantity
ECS-14 to ECS-22	GWL10-8	Shipped included	1 pc.

Maintenance Parts

● Maintenance Parts Set

Model Number	Applicable Models	Component Parts				
		①	②	③	④	⑤
		Timing Belt	Pulley	Sensor Dog	Photoelectric Bracket	Roller unit
ECS-08 JP002-0011	ECS-14	○ (2 pcs.)	○ (3 pcs.)	○ (1 pc.)	-	○ (4 pcs.)
ECS-08 JP002-0012	ECS-17	○ (4 pcs.)	○ (2 pcs.)	○ (1 pc.)	-	○ (4 pcs.)
ECS-08 JP002-0013	ECS-22	○ (3 pcs.)	○ (2 pcs.)	○ (1 pc.)	-	○ (6 pcs.)

* For sensor dogs (P. 271), body sizes 14/17 are Fig. 1, and body size 22 is Fig. 3.
For other sensor dogs, please contact us.

● Maintenance parts (coupling)

Model Number	Applicable Models	Motor Capacity	Bore Diameter
ETS-22007-000289	ECS-14 (Mounting motor specification : F)	200 W	ø9
ETS-22007-000016	ECS-14 (Mounting motor specification : P)	200 W	ø11
ETS-22007-000017	ECS-14 (Mounting motor specification : M, Y)	200 W / 400 W	ø14
ETS-22007-000022	ECS-17 (Mounting motor specification : P)	400 W	ø14
ETS-22007-000358	ECS-17 (Mounting motor specification : F)	750 W	ø14
ETS-22007-000397	ECS-22 (Mounting motor specification : F)	750 W	ø14
ETS-22007-000024	ECS-17 (Mounting motor specification : M, Y)	750 W	ø19
ETS-22007-000029	ECS-22 (Mounted motor specification : M, Y, P)	750 W	ø19

● Maintenance parts (external mounted sensor)

Basic Price Model Number	Applicable Models	Part
ETS-22008-000001	All models	Body
ETS-22008-000006		Cable

Particle Emission Characteristics Reference Data

Test Circuit

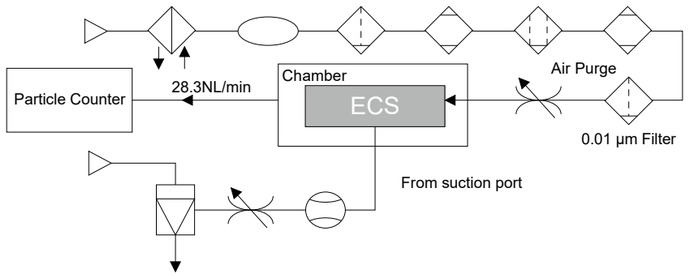

Measurement Method

① Set a test sample in the acrylic resin chamber.

② Supply clean air at the same flow rate as the particle counter intake rate (28.3 NL/min).

③ Place the chamber in an ISO class 4 (class 10) clean bench.

④ Activate the test sample and measure changes in particle concentration over time during the specified measurement time.

⑤ Operating speed of the test sample

Measurement Conditions

Item		Content
Test Sample	Model No.	For ECS-14-20040, operating speed 800 mm/sec
		For ECS-17-20040, operating speed 800 mm/sec
	Acceleration/Deceleration Time	0.3 sec
	Air Suction Volume	60.0 NL/min for ECS-14-20040
		60.0 NL/min for ECS-17-20040
Chamber	Internal Volume	28.3 NL
Particle Counter	Name	Laser dust monitor
	Minimum measurable particle size	0.1 μm
	Suction Volume	28.3 NL/min
Setting Conditions	Sampling	10 min
	Interval	40 min
	Measurement Time	50 h

Particle Emission Data

Data is measured under the above conditions and is not guaranteed.

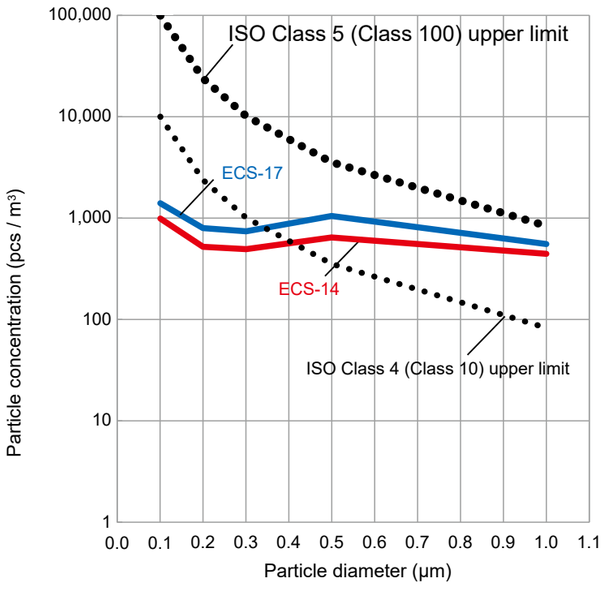

To Use This Product Safely

Be sure to read this before use.

For general information on Electric Actuators, please refer to Intro 15.

Individual Precautions: Electric Actuator ECS Series

During Design and Selection

Danger

■ Do not use in locations where hazardous materials such as ignitable, flammable, or explosive substances are present.
There is a possibility of ignition, fire, or explosion.

■ Ensure that the product is free of water droplets and oil droplets. This can cause fire or failure.

■ When mounting the product, be sure to securely hold and fix it (including the workpiece).
There is a risk of injury due to the product tipping over, falling, or malfunctioning.

Warning

■ Use within the product's specified operating range.

■ If there is a risk of danger to the human body, install a protective cover.
● If the moving parts of the electric actuator pose a particular danger to the human body, design the structure so that people cannot enter the drive range of the electric actuator or directly touch that area.

■ Design a safety circuit or equipment so that damage to equipment, injury to persons, etc., does not occur when the machine stops in the event of a system failure such as emergency stop or power outage.

■ Install indoors with low humidity.
In places exposed to rain or high humidity (over 85% RH, with condensation), there is a risk of electric leakage and fire. Oil drops and oil mist are also strictly prohibited.
● Use in such environments can cause damage and malfunction.

■ Use and store in accordance with the working/storage temperatures and where there is no condensation.
(Storage temperature: -10°C to 50°C, Storage humidity: 35% to 80%, Operating Temperature: 0°C to 40°C, Operating humidity: 35% to 80%)
This can cause abnormal product stoppage or reduced service life. If heat accumulates, ventilate.

■ Install in a location free from direct sunlight, dust, and corrosive gas/explosive gas/inflammable gas/combustibles, and away from heat sources. In addition, this product has not been considered for chemical resistance.
This can cause failure, explosion, or fire.

■ Use and store in a location free from strong electromagnetic waves, ultraviolet rays, and radiation.
This can cause malfunction or failure.

■ Consider the possibility of power source failure.
● In case of breakdown in the power source, take countermeasures without causing trouble or damage to the operator or equipment.

■ Take the operational status into consideration if the machine is reactivated after emergency or abnormal stops.
● Design so that restarting does not cause harm to people or damage to the equipment.
Also, if it is necessary to reset the electric actuator to the starting position, design a safe control device.
Consider the possibility of failure of the installed motor.
Take measures to prevent injury to personnel or damage to equipment in the event of a power source failure.

■ Avoid using this product where vibration and impact are present.

■ Do not apply a load to the product that is greater than or equal to the allowable load listed in the materials for selection.

Caution

■ Do not use in a range where the moving table could collide with the stroke end and break.

■ Regarding installing, setting up, adjusting and maintaining the product, read through the instruction manual and operate correctly.

■ Indicate the maintenance conditions in the device's instruction manual.
● The functionality of this product may be significantly reduced and safety may not be ensured depending on the usage conditions, environment, and maintenance. If maintenance is performed correctly, the product's functions can be fully utilized.

■ The product is manufactured in conformity with the related standards. Never disassemble or modify.

■ Refer to the instruction manual of the motor mounted to the product and control for your safety before wiring and designing.

■ The customer is responsible for confirming the compatibility of CKD products with the customer's systems, machines and equipment.

■ Do not pressurize from the suction port. Lubricating grease may scatter, potentially reducing product life.

■ The required air suction volume for this product varies by model. Please use the required air suction volume for your model.

ECS-14	ECS-17	ECS-22
60 NL/min or less	80 NL/min or less	100 NL/min or less

For precautions regarding mounting, installation, adjustment, operation, and maintenance, please refer to the CKD Equipment Product Site(https: //www.ckd.co.jp/kiki/en/) → 'model No.' → Instruction Manual.

ECSModel Selection Check Sheet → **CKD** (Contact)

Please fill out this form and send it to your nearest sales office. We will respond with the model selection results.

Customer :

Company		Department	
Name		E-mail	
TEL		FAX	

Selection Conditions :

Desired Model	ECS-
Basic Specifications	Max. Stroke : mm, Ball screw lead : mm
Operating Conditions	Moving stroke : mm, travel time : s
	Set Speed : mm/s
	Set acceleration/deceleration : mm/s² (set acceleration/deceleration time : s)
	Repeatability : ± mm
Load Conditions	Slider Type
	Load weight : kg
	Mounting Orientation : Horizontal / Wall-mounted / Vertical / Ceiling-mounted / Other 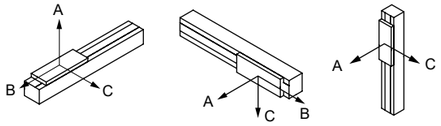
	Distance from slider center to load's center of gravity
	Direction A : mm Direction B : mm Direction C : mm
	Pressing load : None / Yes (N) During operation / When stopped Direction of force on slider center ( )
Operating Environment	Ambient Temperature : °C, Ambient Humidity : %
	Atmosphere :
Motor Used	Manufacturer : , Model No. :
	Motor capacity, size :
Special Notes	

MEMO

Servo motor compatible
EBS
EBR
ETS
ETS Multi Axis
ECS
ETV
ECV
EKS
ESM
Ending